BENGAL SECRETARIAT LIBRARY

THE

INDIAN FORESTER;

A MONTHLY MAGAZINE

OF

FORESTRY,

AGRICULTURE, SHIKAR & TRAVEL.

EDITED BY

E. E. FERNANDEZ,

DEPUTY DIRECTOR, FOREST SCHOOL, DEHRA DUN.

VOLUME XV.

1889.

ROORKEE:

PRINTED AT THE THOMASON CIVIL ENGINEERING COLLEGE PRESS.

1889.

ROORKEE:

H. M. ROBEY, SUPERINTENDENT,

THOMASON COLLEGE PRESS.

CONTENTS OF VOL. XV.

1889.

No. 1.—January 1889.

I.—Articles, Correspondence, &c.— PAGE.

Editorial Note, ... 1
Forest Administration under Lord Dufferin, ... 2
The Shikar difficulty solved, ... 8
Promotion in the Forest Department, ... 9
Vegetable Root-Parasites, ... 10
Forestry in Hungary, (*continued*), ... 21
Goats and Forests, ... 27
Forest Officers and the Warrant of Precedence, ... *ib.*

II.—Reviews—

Report on the Nagpur Experimental Farm in the Central Provinces for 1887-88, ... 29
The Forest Department in Mysore, ... 31
The Cape of Good Hope Forest Act, ... 32

III.—Notes, Queries and Extracts—

Retirement of Dr. Schlich, ... 39
Forests and Rainfall, ... *ib.*
Wood for Cricket Bats, ... 41
The Forest Department and the Timber Supply of Ceylon, *ib.*
Too good to be true, ... 44

No. 2.—February 1889.

I.—Articles, Correspondence, &c.—

Dr. William Schlich, ... 45
Sal Bark as a Tanning Material, ... 51
A new species of Mahogany, ... 55
A new view of Jardinage, ... 56
Forestry in Hungary, (*continued*), ... 62

PAGE.

The Douglas Fir in Scotland, ... 68
Rate of growth of Scotch Pine in Germany, ... 76

II.—REVIEW—

Annual Report of the Division of Forestry in the United States for 1887, ... 79

No. 3.—March 1889.

I.—ARTICLES, CORRESPONDENCE, &c.—

A new view of Jardinage, ... 85
Indian Date-Palms, ... 91
Bamboos for Fishing Rods, ... 92
Forestry in Hungary, (*continued*), ... *ib.*
The Dandot Colliery, ... 101
Seed of *Bambusa arundinacea*, ... 102
The Douglas Fir in Scotland, ... *ib.*
Sal Bark as a Tanning Material, ... 109

II.—REVIEWS—

Annual Report of the Forest School for 1887-88, ... 110
The Madras Game Law, ... 113

III.—TIMBER MARKET—

Return of average Selling Rates for Timber and Bamboos in the Meerut, Bulandshahr, Cawnpore and Pilibhit Districts, ... 117

IV.—NOTES, QUERIES AND EXTRACTS—

Sal Butter, ... 119
The best on record beaten, ... *ib.*
Seasoning and Preservation of Timber, ... 120
Large Specimens of *Bambusa arundinacea*, ... 121
The Weather in India during October and November, ... *ib.*
The Kew Flora indica, ... 122
The Fuel Supply of Darjeeling, ... 123
Fertility and Deforestation, ... *ib.*
New Forest Law in Russia, ... 116
Fixation of loose sands, ... 118

No. 4.—April 1889.

I.—ARTICLES, CORRESPONDENCE, &c.—

Experiments in Silk-Worm Rearing at Berhampur, ... 125

PAGE.

Memorandum on the Timber Export Works in the Bashahr Division of the Punjab, ... 135
Bamboos for Fishing Rods, ... 141
The Oils of Turpentine from *Pinus excelsa* and from *P. longifolia*, ... *ib.*
Indian Gut for Fishing Lines, ... 142
Instruction in Botany at the Forest School, Dehra Dún, ... 143
The Official position of Sub-Assistant Conservators, ... 146
Forest Fires and Popular Customs, ... 148
Forestry in Hungary, (*continued,*) ... ... *ib.*

II.—Review—

The Italian Law of 1st April, 1888, on Reboisement, ... 153

III.—Notes, Queries and Extracts—

The late Mr. Wooldridge, ... 159
The Brandis Prize, ... *ib.*
Notes from Assam, ... 160
A correction, ... *ib.*
Mainphal (*Randia Dumetorum*, Lam.,) ... ... *ib.*
Effects of Smoke on Pine Needles, ... *ib.*
Fertile Seeds in Deodar Cones, ... 161
Saw-dust as Fuel, ... 162
The effect of Fog on Plants, ... *ib.*
A new mode of Felling Trees, ... *ib.*
Supply of Gypsum for Agricultural purposes, ... 163
The Great Atlantic Raft, ... *ib.*
A plague of Tigers in Java, ... 164

No. 5.—May 1889.

I.—Articles, Correspondence, &c.—

Experiments in Silk-Worm Rearing at Berhampur, (*continued*), ... 165
Export Works of the Mandi Forest Company, Punjab, ... 173
The Teaching of Vegetable Morphology and Physiology at the Forest School, Dehra Dún, ... 178
The Mensuration of Timber and Timber Crops, ... 181
Forestry in Hungary, (*continued*), ... 190

II.—Review—

The Game Laws of the Central Provinces, ... 195

PAGE.

III.—NOTES, QUERIES AND EXTRACTS—

Mahadeorao Ramchandra Palnaitkar, ... 198
Professor Wallace abroad, ... 199
The Weather in India during December, ... 205
A new use for India-rubber, ... 206
Game Birds in the Nizam's Dominions, ... 197
Insecticides, ... *ib.*

No. 6.—June 1889.

I.—ARTICLES, CORRESPONDENCE, &c.—

The Production of Seed in its relation to growth and to the reserve materials in trees, ... 207
A Departmental injustice, ... 214
The Teaching of Systematic Botany at the Forest School, 217
Forestry in Hungary, (*continued*), ... 219
The Mensuration of Timber and Timber Crops, (*continued*), 229
Supply of *Bambusa arundinacea* seed, ... 240
Simple cure for Scorpion sting, ... *ib.*

II.—TIMBER MARKET—

Statement of average Selling Rates for Timber and Bamboos in the Meerut, Bulandshahr, Cawnpore and Pilibhit Districts, ... 241

III.—NOTES, QUERIES AND EXTRACTS—

The Preservation of Game in the Central Provinces, ... 242
The Utility of the Cocoanut Palm, ... 244
A White Ant Poison, ... 246
Revision of the Forest Laws, ... 247
A popular Forest Officer, ... 241

No. 7.—July 1889.

I.—ARTICLES, CORRESPONDENCE, &c.—

A New View of Jardinage, ... 249
A Teak-borer in Travancore, ... 252
The Mensuration of Timber and Timber Crops, (*continued*), 253
Forestry in Hungary, (*concluded*), ... 263

II.—SHIKAR AND TRAVEL— PAGE.

The Man-eating Tigress of Mundáli, ... 268
Forest Folk-lore, ... 276

III.—NOTES, QUERIES AND EXTRACTS—

Forestry in South Australia, ... 280
Number of copies of Working-Plans, ... *ib.*
The big Trees of Victoria, ... 281
The Odoriferous Grasses of India and Ceylon, ... 283

No. 8.—August 1889.

I.—ARTICLES, CORRESPONDENCE, &c.—

A New View of Jardinage, ... 289
Fire Conservancy and the Level of Water in Springs, ... 292
Destruction of the Deota Timber Slide, ... 293
The Mensuration of Timber and Timber Crops, (*continued*), 295
A Forester's Life is not a Happy One, ... 305
Pasteur's Method of Inoculation for Anthrax, ... *ib.*
Cultivation of Grapes in the Dehra Dún, ... 313

II.—TIMBER MARKET—

Statement of Average Selling Rates, ... 316

III.—NOTES, QUERIES AND EXTRACTS—

The Influence of Forests on Water-supply, ... 317
The Subordinate Service in the Bombay Forest Department, 320
Reh, ... 321
Celluloid, a new way of utilizing wood, ... 323
Grape Cultivation, ... 325
Denudation of Forests in Hyderabad, ... 327
Oil of Eucalyptus, ... *ib.*
Forest Surveys in Southern India, ... 328
Broussonettia papyrifera, ... *ib.*
A Destructive Forest Servitude, ... *ib.*
A Hint for the Jungle, ... *ib.*
Cedar Wood packages for Tea, ... *ib.*
Lord Connemara on Forest Laws, ... 315

No. 9.—September 1889.

I.—ARTICLES, CORRESPONDENCE, &c.—

Some Notes on the connection existing between Forestry and Agriculture in India, ... 329

PAGE.

The Imperial Forest School, ... 340
The Mensuration of Timber and Timber Crops, (*continued*), 345
A Forester's Life is not a Happy One, ... 353
Pasteur's Vaccination for Anthrax, ... *ib.*

II.—Notes, Queries and Extracts—

A Corner in Ebony, ... 360
The Departmental Scandal in Bombay, ... 361
Evolution of the Saw, ... *ib.*
Artificial Silk, ... 362
Professor Wallace again, ... 365
The Floating Gardens of Kashmir, ... 366
Manufacture of Tea Boxes in Assam, ... 368
White Ants and Mangoe Trees, ... 369
Hunting the White Ants, ... 370
The World's Supply of India rubber, ... *ib.*

No. 10-12.—October-December 1889.

I.—Articles, Correspondence, &c.—

Some Notes on the connection existing between Forestry and Agriculture in India, ... 371
Determination of Insect Pests, ... 386
Injury to Standards from light fires and even from fires not in contact with the trees, ... *ib.*
The Mensuration of Timber and Timber Crops (*concluded*), 387
Notes on the Utilisation of Forests, ... 404

II.—Official Papers—

Note on Himalayan Fodder Grasses, ... 416
On the growth and preparation of Raisins, ... 419
On the cultivation of the Orange and other Citrus trees, 428

III.—Shikar and Travel—

Seven Bears in two hours, ... 435
Forest Folk-lore, II., ... 439

IV.—Timber Market—

Statement of Average Selling Rates, ... 443

PAGE.

V.—NOTES, QUERIES AND EXTRACTS—

One of the World's Wonders, ... 444
The Working of Timber Forests in India, ... 450
Canes and Sticks used in the manufacture of Walking Sticks, Umbrella handles, &c., ... 454
Nitrogen of Vegetation, ... 456
Forests, Rainfall and Climate, ... 458
Wood Manufactures in the Punjab, ... 460
The Sprouting of Seeds, ... 462
The Cultivation of Grass, ... 463
Forestry and the Chambers of Commerce, ... 464
Fuel and Fodder Reserves in Madras, ... 465
Effect of Manure on Fruit, ... 466
Treatment of Swampy Soils, ... 467
Transplanting, ... 468
The Bamboo Industry in Europe, ... 469
India-rubber Industry of Upper Burma, ... 470
The Cocoanut Palm, ... 471
Gutta-percha Leaves as Roof Tiles, ... 472
Manure for Grape Vines, ... 473
Cocoanut Butter, ... *ib.*
A newly-discovered duty of Forest Officers, ... 474
A substitute for Coal, ... 475
Chinese Floating Gardens, ... *ib.*
A new Antiseptic Paint, ... 476
Butter from Cocoanuts, ... 477
Ceylon Forest Department, ... *ib.*
Cause of spontaneous combustion in Hay, ... *ib.*
Silica in the stems of Grasses, ... 478
Utilization of Peat Soils, ... *ib.*
Scarcity of Gutta-percha, ... *ib.*
Disafforesting Irish Woodlands for Match-making purposes, 479
Gardner's Process of Preserving Timber, ... *ib.*
Palmyra Timber, ... 482

EXTRACTS FROM OFFICIAL GAZETTES— i

THE

INDIAN FORESTER.

Vol. XV.] January, 1889. [No. 1.

EDITORIAL NOTE.

WITH its Fifteenth Volume this Journal passes under new management for the fourth time. It was started in 1875 by Dr. Schlich, who edited it until he went on furlough to Europe in 1877. Mr. Gamble then sat in the editorial chair until 1883, when he was transferred to Madras, and abdicated in favour of Mr. Fisher. Up to 1883 the Journal appeared only once a quarter. The main drawback of a quarterly issue was that it was impossible to keep up one's interest in subjects which could be discussed only once in three months. A quarterly publication is suitable only for long articles, on the preparation of which much labour has been expended. But the Indian Forest Officer, who alone can be expected to contribute most of the matter published in these pages, has seldom the leisure or opportunity for penning such articles. The issue of the Journal was, therefore, made a monthly one. It would of course be too much to say that the expectations which heralded this change have been realised in the full measure hoped for. But the most adverse critic must admit that it has resulted both in a very decided increase of interest in the subjects discussed, and in an enlargement of the circle of readers to which it appeals.

The present Editor trusts that he will be freely afforded the same degree of help that has been accorded to his predecessors. To all those who have not hitherto contributed because they have no time for literary work, he would say in the words of the "Prologue" which opened the First Volume—

"We beg every one to send what he has, and not to subject it to a preliminary criticism and put it on one side. 'I did not think you would care about it. I thought it hardly worth sending', are sentences that consign to inutility many really valuable facts, many good suggestions, that may contain the germs, perhaps as yet only partially developed, of future

progress or of some important economy. Literary merit or excellence of style is not looked for in such communications. A diamond, even uncut, is a diamond still; and even if we cannot always have a diamond, we can have a crystal, and that is a very good thing too. Another way of helping will be to ask questions. An interchange of opinions and expressions on all sorts of forest matters will be most useful, and it will create a good discussion, which will be of vital importance to our paper."

And, he would add, to the advancement of forest science in general.

The greatest difficulty encountered in the publication of this Journal is the absence of promptness shown by subscribers in sending in their subscriptions, which for Vols. XIII. and XIV. are still in arrears to the extent of over Rs. 1,000. If payment is made strictly in advance, the funds available will be known beforehand, and it will then be possible to introduce many urgent improvements, which are entirely out of the question in present circumstances. Attention is invited to the coloured slip.

FOREST ADMINISTRATION UNDER LORD DUFFERIN.

THE four years of the departing Viceroy's reign have been four eventful years for forest administration in the Empire. In the first place, the Forest Department was transferred three years ago from the Home Secretariat of the Government of India to the then recently resuscitated one of Revenue and Agriculture. This transfer was made on the ground, amongst others, that the interests of agriculture are closely connected with, and in many respects even dependent on, forest conservation. In the second place, the area of permanent forest estates has increased very considerably, especially in the Madras and Bombay Presidencies, and the annexation of Upper Burma has added to the possessions of the Crown what is probably the most valuable forest property in the world, and certainly in the Eastern Hemisphere. In the third place, numerous working plans have been prepared and put into operation, and the entire business of organising the working and treatment of our forests in accordance with the laws of forest growth and political economy has, after a long period of uncertain groping and discussion, been placed on a stable scientific basis. In the fourth place, the recommendations of the Public Service Commission have resulted in a project for the entire reorganization of the Department.

It will be interesting to pass in rapid review the character and results of forest administration during these four years.

In the first place, as regards the constitution of the State forest

property on a permanent legal basis by means of settlement and demarcation, the policy has continued to be strenuously maintained of creating forest estates, in which the rights of the State and of private individuals and communities have been definitely separated, and those of the latter either bought out or commuted.

It is a truism to say that, without such policy, the necessary permanency cannot be secured for the conservation and management of the great mass of our State forests, the maintenance of which is so absolutely indispensable for the welfare and safety of the country, and that the gradual, but certain extinction of the existing rights of the State in those forests must irrevocably ensue from an indefinite increase of adverse claims.

The area of reserved forests has increased from 48,765 square miles in 1884 to 52,223 at the close of this year, or at the rate of about 800 square miles a year. This may be considered fairly satisfactory progress; but very much still remains to be done in Madras, Bombay, Bengal, the Punjab, and, of course, in Burma. The Madras and Bombay Governments are doing all they can to push on forest settlements, and the Burma Administration has perforce to pause until the country has settled down and the general exploration, already vigorously begun, of its vast forests, has been completed. In Bengal, and especially in the Punjab, the native inertia of the local authorities has still to be overcome.

In order to facilitate, in the first instance, the constitution of public forest estates, and, thereafter, to secure their continuous protection and conservative management, the Indian Forest Act has been extended to Coorg, and the Madras Act to the Scheduled Taluks in the Godavari District of that Presidency; while special forest laws have been enacted for Berar, Baluchistan and Upper Burma.

Experience of the practical working during the past ten years of the older existing forest laws has brought to light some defects therein, which it has now been decided to remove. Accordingly, the bill of a new forest law, amending the Indian Forest Act of 1878, has been prepared. It embodies all the improvements introduced into the later Acts, and also many others that have suggested themselves in the carrying out of the present enactments. These various improvements will, it is hoped, enable the Government to adopt a single forest law for the whole of the Empire, and even to dispense with the Waste Land Act. The Bill aims at facilitating the primary settlement of State lands, and provides, in a chapter by itself, for the adoption of special measures, such as the commutation of rights, &c., if any portion of these lands is required for a

special purpose. It also proposes to confer on Local Governments the power of alienating permanent forest estates under certain circumstances, and does away with the half-hearted policy of creating protected forests.

As regards private forests, their case has been made the subject of a separate Bill, which contains provisions similar to those considered necessary for State forest property. It also proposes to empower the State to interfere in the management of these private lands, if such interference is demanded for the public weal or safety.

Under the head of forest organisation the work accomplished has been very satisfactory.

The first step to organisation is an accurate geodetic survey. The rapidity of progress in this branch of work has been more than doubled by the co-operation of the Imperial Survey Department, which executed surveys in Burma, the Central Provinces, Bengal and the Punjab. The Forest Survey parties operated in Berar, Chhota Nagpur and the North-Western Provinces, and also in the Punjab. The maps produced by the Forest Survey Branch created a favourable impression at the Edinburgh Forestry Exhibition, and were appreciated by high forest authorities on the continent of Europe. Until recently the cost of the Forest Survey Branch was a charge on the Imperial revenues, and the expansion of its operations was limited by a more or less fixed budget. This restriction has now been removed by making the Provincial revenues share a just proportion of the burden.

Most of the forests of the North-Western Provinces have now been placed under the operation of regular working plans; and a great deal of progress has been attained in this respect in the Punjab and Lower Burma, while a beginning has been made in Bengal, Oudh, Berar and Coorg. Further progress has, however, been checked through weakness of establishments, which has everywhere paralysed action.

It is interesting to note that the working plans hitherto prepared and brought into force show that in nearly every case the forests to which they apply were previously worked below their real capabilities. Apart, therefore, from the certainty and stability which working plans give to forest management, and the rapid improvement of the stock they bring about, their introduction has resulted in a considerable addition to revenue, and in an increased supply of cheap timber and fuel to the neighbouring populations. This proves the mistaken policy, even if the exigencies of empire on the North-West and North-East frontiers and in Burma require

a tight hand to be kept on the purse strings of the State, of starving the forest establishments to such an extent as to prevent most of the provinces from either establishing or continuously maintaining a working plans staff.

In respect of forest police and protection, the Department must be congratulated on the continued high percentage of convictions obtained in the cases prosecuted in a court of law, a circumstance which shows that the forest laws are enforced with great consideration for the people. The efficiency of protection as well as the law-abiding character of the people is proved by the fact that the total number of cases, including trivial offences, has amounted each year to even less than one for every four square miles of reserved forests, which as yet constitute but a small proportion of the aggregate area under the management of the Department.

The area under protection from fire has increased very considerably, and the average area actually saved each year has risen, during the period of four years, from 15,570 to 18,691 square miles. It must be explained that these figures include only such areas as are protected by means of fire-traces and a special establishment of guards, *i.e.*, by the special efforts of the Department, for a very large aggregate area escapes conflagration owing to the more or less evergreen nature of the growth and the moist character of the soil and climate.

Large areas have also been withdrawn from abusive, wasteful nomadic grazing, a practice that was no doubt perfectly rational and inevitable in Patriarchal times, but in these days is inexcusable except in thinly populated districts, unfit for agricultural purposes.

The exploitation on scientific principles of the State forests has made a considerable step in advance under the impulse given to it by working plans. Indeed, in many of the working plans that have come into operation during the past four years, the habits and requirements of the principal species with regard to light and shade, shelter and exposure, drought and moisture, &c., and their reproduction and rate of growth under different conditions, have been carefully studied and kept in view. Every Annual Progress Report is required to record the principal cultural phenomena observed during the year, and the General Review of Forest Administration, written by the Inspector General, is expected to collate and arrange them so as to bring them to a common focus. In collecting all this information, it has not been forgotten that the causes of the present condition of our forests must to a great extent be sought for in their past history, and that since we have undertaken their management only a few years ago, the circumstances

affecting and regulating their growth have been very largely changed. The results of these modified circumstances are only just beginning to show themselves, or to be correctly appreciated; but they have already taught us that conclusions drawn from observations made in our forests as they are, will not necessarily be applicable to the same forests when the constantly adverse conditions under which they have sprung and grown up have been removed, and they have been carefully protected and properly treated during a long series of years. Moreover, many extremely interesting facts have already come to light, such as, for instance, the gradual spontaneous appearance under fire-conservancy of a complete growth of *Macaranga denticulata* in the midst of the dense tall grass of the savannahs in Northern Bengal, the doubling, in some cases, of the current annual increment as the result of protection, &c.

A new fillip has been given by certain statistics reported from the Central Provinces, to the observations carried on with the object of ascertaining the influence of forest conservancy on rainfall, temperature, humidity, floods, drought and the level and abundance of water in springs; but some time must still elapse before any trustworthy conclusions of a final character can be drawn.

Artificial reproduction, which, however, necessarily plays a comparatively unimportant part in Indian forestry, has not been neglected. Besides other work, large additions have continued to be made to the teak *taungya* plantations in Burma, while the planting of mahogany under the teak in the great Nilambur plantations has made satisfactory progress.

The quantity of produce exported from the forests has increased very considerably. This is due to the opening out of new forest tracts, but is also, to a great extent, the result of improved means of transport. In this latter connection it is interesting to note that Lord Dufferin has urged the advisability of employing moveable tramways, which would be available in time of war or famine. The realisation of this project is only awaiting a further extension of the general railway system and its nearer approach to some of the more important forest areas. The increase in the exports of forest produce is also a consequence of the growing prosperity of the country, which is clearly indicated by the use, in many localities, of sawn scantlings in place of the rough unwrought poles that were formerly put into buildings.

The record of yield is as yet too incomplete to permit of the compilation of trustworthy figures to prove that the exports of produce from the State forests has largely increased; but the financial

results establish the fact conclusively enough. The gross revenues derived from the State forests averaged 67 lakhs in the period from 1876-77 to 1879-80, 94 lakhs during the Viceroyalty of Lord Ripon, and 116 lakhs during that of Lord Dufferin. Although Upper Burma was annexed two years ago, the last-mentioned figures practically include no income from that region, as the revenues from its forests have been absorbed, until quite recently, in the liquidation of debts resting on them on account of advances made by lessees to the government of King Theebaw. The settlement of these debts, and the correct interpretation of the loosely worded leases, was a work which required the most delicate handling and an unerring judgment, as the lessees were in most cases corporations or syndicates possessed of unlimited resources and advised by the cleverest lawyers in India. The great influence of the "Times" was also brought to bear against the Government of India. The advances have been paid off, and the leases have now at last been placed on a sound and equitable basis, acceptable to all the parties concerned. This satisfactory exit out of a difficulty, which at one time threatened to become an *impasse*, has been the work of Mr. Ribbentrop, who has received the special thanks of Lord Dufferin for it. The forests of Upper Burma may now be expected to yield a very considerable and rapidly increasing revenue, and this with the greater certainty that all forests in the feudatory Shan States have, in accordance with precedent furnished by former Sovereigns of Burma, been declared Crown property.

No great changes have taken place in the organization of the controlling staff in the older Provinces, if we except the addition of three officers to the Assam list and two to that of Bombay; but a new staff, comprising 21 officers, inclusive of two Conservators, was sanctioned for Upper Burma.

The weakness of the Forest Staff, relative to the work to be done by it, did not fail from the very beginning to attract Lord Dufferin's attention, and it has struck the India Office also, which has forwarded, for the consideration of the Government of India, proposals from Sir Dietrich Brandis on the subject. A reorganization scheme, based to some extent on the recommendations of the Public Service Commission, is under consideration. This, while reserving the most important appointments in the Department for officers trained in Europe, opens out a sufficiently wide field for the employment of Her Majesty's subjects in India, and offers facilities for obtaining an advanced forest education within the country itself. The organization of a Forest class at Cooper's Hill College, which was tentatively started in 1885, and has since been permanently estab-

lished, is, probably, the most important event in the history of Indian forest administration, and one the effect of which will be felt not only in India and its dependencies, but in the mother country itself, and in the various colonies as well.

In India itself a very important improvement was introduced in the system of instruction at the Dehra Dún School in 1885. The course originally consisted of only two terms held in two successive years from 1st July to 31st October, the interval of eight months being spent by the students in various divisions, where they either learnt a little administration, or were employed in counting trees in enumeration surveys. Now that interval, and also the five months succeeding the second Rainy Season term, are passed in camp with the Deputy Director of the School and other Instructors, who carry on a course of combined indoor and outdoor work, thus making the teaching as practical as possible.

THE SHIKAR DIFFICULTY SOLVED.

THE question of regulating hunting in the reserved forests is one that has driven many Forest officers well-nigh distraught, and various schemes have been submitted which have never emerged from the region of discussion and consideration. Mr. Mackenzie has, however, grappled with this, as with all other administrative problems, with his characteristic vigour and thoroughness, and the result of his labours is seen today in Central Provinces Notification No. 6925, which we reprint *in extenso* in our extracts from the Official Gazettes.

The Notification is of course published under the authority of Section 25 (*i*) of the Indian Forest Act. Briefly summarised, it prohibits the poisoning of water for any purpose whatever, and permits shooting only under a license obtained from the Deputy Commissioner or a Forest officer duly empowered in this behalf, the fee for the license being one rupee per diem for each sportsman or shikari follower, and eight annas per diem for each elephant or camel entering the reserved forest. When the license authorises a camp to be formed within the limits of the reserved forest, the licensee must also defray the pay and allowances of a Forest Subordinate deputed to attend his camp. The officer granting the license, or the Conservator of Forests, may cancel it at any time, and the occurrence of a fire in the forest in question renders *ipso facto* the license invalid. The license to hunt will not obviously interfere with the preservation of game, for which the observance of a close season has been ordered by the Chief Commissioner.

We have in the above a most comprehensive game law, and all foresters and true sportsmen will watch its operation with interest. We would earnestly commend it to the attention of all other Local Governments, and especially to that of our rulers in these Provinces, where deer are rapidly disappearing from districts that were not many years ago a paradise for sportsmen. The financial bearing of such a law should not either be lost out of sight in these days, when the Supreme Government is brought to such a pass as to contemplate revising the five-year Provincial Contracts several years before they have lapsed.

PROMOTION IN THE FOREST DEPARTMENT.

Our readers will not have failed to observe from the Gazette Notifications published in last month's number of the "Indian Forester" the extraordinary fact that in Burma there is not a single incumbent, permanent or temporary, in the first grade of Assistant Conservators, although there are no less than seven appointments in that grade. Lucky, thrice lucky the young officers who are only waiting to obtain the necessary certificates in order at once to step into these vacant appointments, which are actually two in excess of their own number. Five candidates for seven vacancies!

Another interesting fact to notice is that the most senior Deputy Conservator of the 2nd grade in Burma has less service than the most junior Deputy Conservator of the 3rd grade in almost every Province of India proper, while if we consider only the North-Western Provinces and Oudh and Central Provinces lists, the same officer has less service than all but two of the Deputy Conservators of the 4th grade on that list!

Burma, as we all know, has for a long time been a nursery for Conservators, but the rapidity with which the Forest officers there have jumped from promotion to promotion during the past two years has exceeded even the phenomenal rapidity of preceding years. Of course no one grudges advancement to the fortunate officers who have the privilege of serving in Burma, but something ought surely to be done to remove the block in promotion, which has so long prevailed in the Central and North-Western Provinces and Oudh. There officers with fifteen and sixteen years' service are still in the 4th grade of Deputy Conservators, and some of them cannot possibly, under present circumstances, attain permanent entrance into the next higher grade for at least three or four years to come. One officer with 19 years' service is still in the 3rd grade!

But even stagnation of promotion can be borne with resignation, if there were a certainty that officers in Burma would be kept on their own large list, and leave for the men serving in other Provinces the few prizes that the Department has there in the shape of Conservatorships. But this certainty does not at all exist. The Department in the Punjab was for five successive years administered by officers transferred from Burma, and one at least of the present officiating Conservators is an officer who was just about to step into a Conservatorship in Burma when he was transferred to India. We omit the case of several other officers, who are now either Deputy Conservator of the 1st grade, or Conservators, or even higher, who were originally in Burma, and whose transfer made room for junior officers there.

What Forest officers in India proper demand is justice and only justice.

VEGETABLE ROOT-PARASITES.*

(Translated from the "Allgemeine Forst und Jagd Zeitung" for April 1888).

WHEN, several decades ago, Justus von Liebig showed that the nutrition of plants depends to a very great extent on the elements of plant-food present in the soil, and that an unscientific system of cropping, whether in the case of forest, field or garden, must result in the exhaustion from the soil of one or other of these elements, and the consequent enfeebled growth of the crops, people went a step further, and without any exact experiments to warrant them, rushed to the conclusion that acute diseased conditions observed in cultivated plants, as far as they had not been brought about by extraneous causes, were due to the absence of this or that element of plant-food in the soil. Even Liebig himself was inclined in the direction of this theory, but it was more the work of his successors in the province of agricultural chemistry, who, in some measure, still maintain it with remarkable pertinacity.

The fact that acute diseased conditions occur over and over again in rich as well as in poor soils, did not trouble those people. They saw in this fact only a reason to make another leap, and assume that not only lack of one or other of those substances, but also a superabundance of it, was productive of disease.

One need not wonder that, in spite of the slight support this

---

* Indian foresters will read with interest this masterly *resumé*, from the pen of the illustrious inventor of Forest Mycology, Dr. Rob. Hartig of Munich, of what is known regarding the mode of life and working of root-parasites.

assumption received from science, it was very generally accepted as probable by the scientifically educated layman. The more difficult it is for the layman to grasp the results of scientific enquiry, the more tenaciously does he cling to them once they have been grasped by him, even when the progress of science has long ago proved their untenability.

If I bring together in this article the more important facts known regarding root-parasites, it must not be supposed that I believe them to be the sole causes of acute diseases in roots. Rather is it certain changes occurring in the soil, that by physical or chemical action occasion the death of the plants.

Let us suppose that in a soil, in which plants have hitherto been thriving, diseased conditions suddenly manifest themselves. It is evident that this cannot be due either to lack of plant-food or to the presence of some deleterious substance which was not there previously. Diseased conditions can result only from changes that have occurred in the soil. I will here indicate some of these changes.

We all know that plants take in through every portion of their surface, inclusive of the roots, the oxygen they require for the process of metasthesis, just as all animals and plants inspire oxygen and expire carbonic acid. Hence, if from some obstacle or other arising, oxygen is unable to reach the roots, the plants die asphyxiated. All diseased conditions resulting thus I have desigated root-rot (*Wurzelfäule*) in the strict sense of the term, in opposition to those processes of decay which are induced by other causes.

In our forests this disease makes its appearance in a form that is at once fatal in crops of Scots' pine, particularly towards the 30th year, when, owing to the formation of a thick covering over the ground and of a dense leaf-canopy, the circulation of air in the deeper layers of the soil is impeded, and under certain conditions the roots die from want of sufficient aëration. This is, for instance, often the case in old abandoned wheat fields, where what may be called the floor is rendered compact in consequence of the washing away of the upper layers of the soil.* The same thing happens on

* Dr. Warth explains this phenomenon as follows:—At a certain depth below the surface in old abandoned fields, a layer of soil is encountered which is harder or at least more compact than what is above or below it. This layer is permeated with calcium carbonate, magnesium carbonate, or ferric hydrate, which is deposited between its component particles, and is thereby rendered harder and also probably heavier than the rest of the soil. The carbonates and iron in question are derived from the layers of the soil above.—[Ed.]

moist heavy loams and in very fine sandy soils. I feel certain that in clover fields also the top soil may become hardened to such an extent as to prevent sufficient air from reaching the roots, and to cause the crop to fail. To the same cause must also be ascribed the death of pot plants kept inside rooms, when they are over-watered, and even when the tray or saucer on which they rest is allowed to remain full of water. And if the pot is a glazed one, the roots become asphyxiated, since water fills up all the interstices in the soil and there is no room left for air to enter.

It very seldom happens that an effective plant poison is found spread over any appreciable extent of soil. In the immediate vicinity of factories sulphuric acid may taint the soil, or in towns lighting gas may find its way out of defective piping.

More often we find in the soil, on a more or less large scale, substances in solution, which are not themselves poisons for plants, but which, if present in sufficient abundance, have the effect of drying up the roots by preventing water from entering them by endosmotic action. Sea water, for instance, has destroyed large areas of forest on the Baltic coast, from the water that came over the dunes in the spring tides being unable to find an exit and sinking into the soil.

By means of a series of experiments, I have now established that solutions containing from 2 to 3 per cent. of common salt cause woody and herbaceous plants watered with them to dry up. The absorption of water by the roots is an endosmotic process; the cell-sap of the root cells is thickened with various matters in solution, and hence takes up greedily the less dense water in the soil. Now if the water round the roots, by dissolving any substance, becomes denser than the cell-sap, the endosmotic action is reversed, and water from the roots passes into the soil. The roots thus dry up and the plant dies. The same result is observed to follow if plants are treated with a too easily soluble manure, such as urine, salts, &c.

I have now, I believe, made it clear that I do not in any way take the one-sided view of regarding all and every diseased condition of the roots as the result of the attacks of parasites, because it has fallen to my lot to discover and describe a whole series of root parasites.

These parasites, as far as they are known, divide themselves into four well-defined groups.

I. The first group comprises the flowering parasites. These, for the most part of conspicuous size, have for a long time been recognised as true parasites, since it was easy, by digging them out,

to assure oneself of their connection with the roots of the host. We can at once call to mind a considerable number of very well-known flowering plants, which, instead of elaborating their own nourishment from inorganic materials, save themselves that labour by leading a parasitic life, *i. e.*, by attaching themselves by means of their roots to the roots of other plants, and drawing therefrom ready-made organic constructive materials. There are many plants which behave thus, in, I may say, a secret and occasional manner, that is to say, they, like other phanerogams, possess green leaves and even elaborate sap from crude inorganic materials, but nevertheless attach themselves by means of some of their roots to the roots of other plants, from which they then suck out nourishment. Such plants are *Euphrasia*, *Pedicularis*, *Rhinanthus*, *Melampyrum*.

It is very probable that this form of parasitism was originally exercised by all flowering parasites, even those which possess no chlorophyll, and that as the plants got accustomed to this comfortable mode of obtaining food, they gave up to the same extent the more laborious one of elaborating it themselves by means of assimilation. The chlorophyll thus gradually became unnecessary, and it ceased to be produced. The leaves were reduced in size, and thus were produced those well-known parasites, remarkable for their green colour, of the genera *Orobanche*, *Lathræa*, *Monotropa*, &c. That these parasites may, under circumstances, become pretty troublesome has been specially noticed by me in tobacco fields in the Palatinate, and particularly in the Rhine country, where sometimes most of the tobacco plants are found surrounded with numerous yellowish-brown inflorescences of *Orobanche ramosa*.

II. A second group of root-parasites comprises all those fungi, which, spreading in the soil, produce the forms of disease in cultivated plants, known formerly under the general designation of root-cancer, and ending in the death of the attacked plants. People were completely in the dark as to the cause of the disease; all that they knew was that, whether in forest, vineyard or garden, disease appeared at one point, and went on spreading outwards in every direction, producing a complete failure or blank at that spot.

A study of these diseased conditions has revealed to me a host of most interesting parasites, all of which have this one thing in common, that the vegetating portion of the fungus, the mycelium, grows away out of the diseased roots, and in one form or another, generally in that of strings of characteristic appearance, spreads itself through the soil, attacking and killing the plants that come in its way. Thus each plant attacked becomes a new centre of disease.

It is now 15 years ago that I first recognised the *Agaricus melleus* as one of these parasites that had a very wide spread.* The strings of the mycelia of this parasite are well known, and have been called *Rhizomorpha fragilis*. They resemble root-hairs, are branched, generally round and blackish-brown. They are met with nearly everywhere on old woodwork, such as water-pipes, piers of bridges, mine props, &c., and on old stools. When the mycelium spreads throughout the mass of the timber and destroys it, it becomes phosphorescent, often emitting so bright a light that, with the help of a small piece of the wood, one may read print in a dark night. When the growing tip of one of the strings in the soil comes in contact with the root of a sound conifer, or of a cherry, plum, &c., it bores its way into it, and spreads fan-fashion throughout the substance of the inner bark, and in this manner gradually kills the largest and oldest trees. Spreading from tree to tree, the fungus produces large blanks. From the bark of the host, or directly from the naked string running through the soil, develop the large organs of fructification. It is hardly necessary for me here to say more regarding the results of my researches, and so I will merely state that it is in my opinion imperative to remove every attacked tree by the roots and destroy it; otherwise in dense crops the neighbouring trees likewise are bound to die in a few years.

There is in conifer forests another parasite that has a still wider spread, and is more destructive than the one just described, and which I have named *Trametes radiciperda*.† It is the principal cause of the formation of blanks in old crops of spruce and of Scots' pine. It is harmful chiefly because, before it kills its victim, it produces the worst form of red rot in the most useful portion of the trunk. Should a spore still possessed of the germinative faculty fall on the root of a conifer, the wall of the spore throws out a process which works its way into the bark, and the mycelium then extends itself into the innermost ring of wood as well as all through the bark. The mycelium thence ramifies and spreads rapidly upwards into the trunk, producing red rot and destroying the wood. Before death occurs, the rot often extends from 30 to 70 feet up the tree. At the same time the mycelium spreads, though much more slowly, into the tissues of the bark of the root attacked, killing it and ultimately reaching the stool, whence it descends and invades

* "Wichtige Krankheiten der Waldbäume." Berlin, 1874.

† "Die Zersetzungserscheinung des Holzes." Berlin, 1878.

all the remaining roots and soon kills them. It also grows out into the interstices between the scales of the bark, and forms cream-coloured mushroom-shaped masses, which, when the root is not covered with soil, develop into snow-white fructifications. Where a mouse gallery or rabbit burrow, or the kennel of a fox or badger uncovers a diseased root, there these fructifications occur in great numbers. It is thus easy to understand how spores produced underground are disseminated far and wide, obviously carried away adhering to the fur of those animals. But the mycelium in the bark also causes the disease to spread from tree to tree. In a canopied forest the roots of neighbouring stems have of course numerous points of contact, and where a diseased root touches the root of a healthy tree, the mycelium spreads into and invades this latter. It is therefore clear that the most effective measure to take against the spread of the fungus would be to pluck out by the roots or grub up all attacked trees. But since such an operation is very costly, and at any rate can hardly ever be carried out in a complete manner, a simpler and more practical method would be to dig a deep trench round the area containing the attacked trees. The work must be done with the greatest care, if it is to be effective. But the best method of checking the spread of this, as well as every other infectious disease, is to grow and maintain mixed forests. Since broad-leaved trees are not subject to the attacks of these parasites, it follows that, even when a single tree has been attacked and killed, the extension of the disease underground can take place only with difficulty, the surrounding broad-leaved trees interposing an insurmountable obstacle to its spread.

A third root parasite that devastates conifer forests is *Polyporus vaporarius*.* It sends out strings of mycelia resembling those of *Merulius lacrymans*, and by their means spreads from tree to tree. Wood infected with this parasite often presents appearances of decay, which it is difficult to distinguish from those produced by the *Merulius*.

Even broad-leaved trees are subject to destructive root-parasites, which produce less or more large gaps in standing crops. Thus in the Rhine country, and especially in the Palatinate, I have observed a disease in oak sowings caused by a fungus which I have named *Rosellinia quercina*.† In sowings one or two years old, seedlings over larger or smaller areas die off, and one finds on the

* "Zersetzungserscheinungen des Holzes" Berlin, 1878.

† "Untersuchungen aus dem forstbotanischen Institut in München," Bd. I. Berlin, 1880.

roots, a mycelium consisting of fine strings, which are at first white and become later on brown. The manner in which the roots of the oak seedlings are attacked is extremely interesting. The tap-root is everywhere enclosed in an impenetrable corky envelope, except at its tip, and at the points whence the fine root-fibres, which are also free of the corky growth, start out from its interior. The fine rootlets first die, and over their point of insertion the fungus forms a fleshy tubercle, which sends forth into the bark of the root numerous processes. Now for the first time from the pointed posterior ends of these tubercles develop inwards the thread-like mycelium that kills the roots. The fungus grows only in moist warm weather. With the coming on of dry or cold weather its development comes to a stand-still, and now the attacked plant has a chance of being delivered from its enemy. For if the fungus has merely pushed in its little conical tubercle into the bark without having developed its fatal mycelium in this latter, the oak seedling forms round the spot where it has been attacked an intercepting layer of cork, which the fungus is powerless to penetrate. The tubercles can nevertheless still develop outwards in moist warm weather, throwing out new mycelia, which, running through the soil, may attack and kill the surrounding plants. On the mycelium form black globular fructifications of the size of a pin's head, and full of countless spores.

I have had an opportunity of studying an entirely similar disease in the vine. It is called *Pourriture*, *Pourridie de la vigne*, *Blanc des racines* in France, and *Mal bianco* in Italy, and has been known during the last 10 years or so in Switzerland and Austria as *Weinstockfäule* (vine disease).* It has devastated large areas in Gascony, and in the departments of the Meurthe and Moselle and of the Haute Marne. In the latter department nearly 4,000 acres of vineyards had been wrecked in 1881. In Germany it has made its appearance at several points in the south of Baden. In its outward symptoms it resembles the phylloxera blight, and it is certain that it has very often been mistaken for that disease. If a close search did not reveal the actual presence of the Phylloxera near the roots, it was assumed that the insect had left the vineyard. When I first heard of this disease, it was supposed that it was due to the *Agaricus melleus*, which had already been described by me. As I was sceptical on this point, cuttings from diseased plants were sent to me, and I discovered on them not the *Agaricus melleus*, but an entirely new parasite, which I have named *Dematophora necatrix*.

* "Untersuchungen aus dem forstbotanischen Institut," Bd. III. Berlin, 1883.

I have succeeded in killing, by infection with this parasite, not only healthy vines, but also kidney beans, potatos, &c.

The parasite extends itself in the soil very far by means of fine thread-like mycelia, which manifested, in my cultivations of it, a vigour, such as I had up to then observed only in the case of the *Merulius lacrymans*. Large, brilliant white masses of mycelia develop themselves in moist places, even outside the soil, and spread themselves over every object with which they come into contact. Thus in vineyards not the vines alone, but also the props, become overgrown with the fungus.

As a rule an attacked vine may be recognised in the first year by its displaying a very abundant fruitfulness, in the second year by its producing only short shoots, when on the approach of autumn it dies. If an attacked plant is pulled up out of the soil, the roots, especially the deeper ones, will be found for the most part rotten, and the stem will be seen to be covered with white, often stringy, masses of the fungus. If we examine the bark more closely, we shall notice, in their most characteristic form, round or flattened, frequently branched filaments, the so-termed rhizomorphs, which, however, in their internal structure differ completely from the rhizomorphs of the *Agaricus melleus*. From these rhizomorphs starts the thread-like mycelium, which not only kills the bark, but also pushes into and destroys the wood, this latter assuming a blackish-brown colour. The destruction of the wood is due to the exhaustion of the cellulose, so that only gum, coniferin, &c., are left. The gum forms itself into drops, and it is this circumstance that led an Italian scientist into the error of designating the disease as *Gummosis*. The branches of the rhizomorph that form on the outside of the roots either push on directly into the soil, where they often ramify in every direction, or they resolve themselves into single threads, or they form on the surface of the root little tubercles (sclerotics), which are superficially black, and which sometimes persist thus, sometimes develop into the spore-cases of the fungus. These spore-cases have the appearance of fine bristles composed of a number of interwoven hyphæ, which, separating into little tufts at their extremities, bear the fructifications. But such spore-cases also develop on the thin thread-like mycelia, which, in wet weather, grow on planks and appear on the surface of the soil. The parasite becomes active only in moist warm seasons, and its growth is arrested by dry or cold weather. I have essayed, by pulling up the affected vines by the roots, by isolating the infected spots by means of trenches, and by starving the fungus for a series of years, to completely destroy it. But as these measures, the

efficaciousness of which has still to be proved (and I am not in a position to do so), must always be costly and wearisome, we might try whether we cannot attain the same end by merely creosoting the props used.

Besides the root-parasites just described, which kill the plants attacked, there are of course many others that have hitherto either not been studied at all, or only insufficiently studied. I will call to mind the lucerne and saffron blight, of which only the mycelium, called *Rhizoctonia violacea*, has yet been observed. The connection which Fuckel has endeavoured to establish between this mycelium and the fungus called by him *Byssothecium circinans*, is absolutely without any foundation.

III. I will now pass on to the third group of root-parasites, which differ essentially from those of the second group in their mode of life, in that they attack the roots of large plants alone, killing only a portion of those roots, but doing practically no appreciable harm to the whole plant. It is to this group that the various truffles and their allies belong. Professor Rees of Erlangen was the first to establish the fact that the so-called stag-truffles of the genus *Elaphomyces* live parasitically on the roots of the Scots' pine.* Later on Frank showed, for the true truffles of the genus *Tuber*, that they live on the roots of the oak and beech.†

I have no doubt but that a large number of subterranean fungi lead a mode of life similar to those just referred to. This mode of existence is entirely peculiar to these fungi. The mycelium is found on the outer fleshy bark of the tender ends of roots, which it completely envelopes. It may penetrate into the tissues of the bark, but, as a rule, it stops short of the inner bark. If it gets into this last, the end of the root which bears it dies. On the other hand, if the mycelium does not go beyond the outer bark, the root does not suffer at all, and when the outer bark dries up and dies, the mycelium also dies. Roots, over which the mycelium has spun its web, display very much increased vigour of development; they become thickened and ramify abundantly, so that they can by these peculiarities alone be recognised at once. These root-parasites are very common in the soils, so rich in vegetable mould, of our forests, and there is scarcely an oak, a beech, a hornbeam or a conifer, that has not numbers of its roots attack-

* "Untersuchungen über Bau und Lebensgeschichte der Hirschtrüffel, Elaphomyces von Dr. M. Rees und Dr. Fisch. (Bibliotheca botanica. Herausgegeben von O. Uhlworm und F. H. Hanlein. Heft F.)" Kassel, 1887.

† Frank in Leunis: "Synopsis der Pflanzenkunde," Aufl, III.

ed by their mycelia. But the harm these mycelia do to the trees is slight.

As my experiments regarding the absorption of water from the soil by trees conclusively prove, this process is limited for most forest trees, and particularly for those attacked by fungi, to the months June–September.* In autumn, winter and spring it sinks down to a minimum, or ceases altogether. This phenomenon is, it seems to me, closely connected with the condition of the young roots. In May new fibres and hairs develop on the existing roots, and these are at first quite free of fungi, so that they can absorb without hindrance water and nutrient materials from the soil, the maximum activity manifesting itself in June and July. The mycelia now spread gradually onwards from the old roots to the new, and in the same measure the absorptive faculty of these latter diminishes. If the fungus grows vigorously, it may kill all the new roots, and thus render the tree unable to take up any more water, until in the following May it again develops new roots free of the fungus.

Frank in Berlin has put forward a view of his own, that is totally opposed to mine just described.† The hypothesis he endeavours to establish is that the life and nutrition of forest trees are dependent on those fungi, that a symbiose (life association) takes place between fungus and root-tip, that this latter takes up its water and nourishment entirely from the fungus, so that the tree can obtain its food-supply only through the channel of the fungus. The roots attacked by the fungus he calls *mykorhiza.*

This view of the matter obviously upsets every idea hitherto held regarding the nutrition of trees. I have already on a previous occasion shown that mykorhiza are never met with at all points; that not a trace of them was to be found on the roots of a large number of 10-year old oaks, beech, hornbeam, and hazel carefully dug out of the garden belonging to our forest experimental station; that even in the case of heavily attacked trees out in the forest a relatively large proportion of the roots are invariably free from the fungus; that not a single fact can be adduced to force us to accept for the *Cupuliferæ*, the *Coniferæ*, the *Vacciniæ*, &c., a mode of nutrition so entirely special, so totally different from that of other woody species. I see in these fungi nothing more than mere parasites that draw their nourishment from the roots of their hosts

* "Untersuchungen aus dem forstbot. Institut. München." Bd. II. Berlin, 1882.

† "Berichte der Deutschen botanischen Gesellschaft." Jahrg. 1885.

without killing these last, just as there are innumerable parasites living on leaves, which can do but little harm to the tree itself. This way of looking at things is no doubt rather commonplace, but after all it is better supported by facts than the Frankian view.

IV. I come now to the fourth and last group of root-parasites. These include a great number of species, which are not only confined to the roots of plants, but also attack and destroy their aërial portions. I will cite the case of a fungus that was first described by me as long ago as 1875 under the name of *Peronospora Fagi*, and was known by me to attack one-year old beech seedlings both in nurseries and plantations all over Germany.* Since then I have found it ravage seed-beds of conifers and destroy maples, acacias and even a number of garden plants, such as *Scabiosa*, &c. Hence the name of *Phytophthora omnivora*, proposed for it by de Bary, is to be preferred.

The spores of this fungus, which is the nearest ally to the potato blight (*Peronospora infestans*) often remain inactive in the soil for a long series of years. They have only to come in contact with any portion of the roots of a plant just coming up from seed for the oospore to produce swarms of spores, which sprout and invade the tissues of the young plant. The moment these tissues are attacked they turn black. Through the epidermis of the infected plant push forward filamentary processes which produce a large number of conidia, exactly as the potato blight does.

These conidia disarticulate and fall off easily. If they get into a drop of rain, numerous oospores form inside them, which, after moving about for a little time, sprout and attack fresh plants. It is principally by means of these conidia that the disease spreads. They are easily carried away on to any number of new plants, on shoes and clothes. Animals, particularly mice, also disseminate them, in the same way as hares and partridge help in spreading the potato fungus.

In the interior of diseased plants, after the necessary fecundation, new oospores form on the mycelium. These oospores enter the soil with the host and poison the soil for many years. But in thick sowings on moist soils the mycelium itself spreads underground and travels from plant to plant, killing them one after another.

The disease spreads so rapidly, that beds of young beech strewn with the conidia, or after contact with infected plants, require from 8 to 14 days only to be completely destroyed.

---

* "Zeitschrift für das Forst und Jagdwesen." Berlin, 1875, pages 117-123.

FORESTRY IN HUNGARY.

CHAPTER I.—(*continued*).

(*Continued from page* 547, *Vol. XIV.*)

Working Plans, Produce, and Sales.

All the forests included in Class (A.) (*see* page 531, Vol. XIV.), being under the provisions of section 17 of the Forest Law, must, as before stated, be managed in accordance with the provisions of a working plan approved by the Minister of Agriculture. A period of five years, which expired on the 14th June, 1884, was allowed for the submission of proposals on this subject; but up to that date very few plans had been submitted, and most of the proprietors have had to ask for the extension of three years, which can legally be granted when sufficient cause is shown. In as many as possible of these cases, however, the Minister of Agriculture has, in the manner prescribed by the law, approved of temporary plans to regulate work for the next few years. These plans have been prepared by the Inspectors from *data* furnished by the proprietors.

The regular working plan consists of three parts—

1. *A statement of the present condition of the forest.* This gives all information, relative both to the forest itself and to its surroundings, which is likely to influence the management—such as its situation, its owner, the rights of other persons in it; the wood markets and export lines; the number of managers, guards, and workmen employed; the previous system of working, the results of survey, and valuation of the growing stock.

2. *The use to which the forest is to be devoted.* This must be determined on the assumption that it is to give a constant annual yield for ever; but, subject to this condition, the wishes of the proprietor must be considered.

3. *Management and yield.* This part of the working plan deals with the species to be cultivated, the system of management to be adopted, the revolution, manner of regeneration, and division into blocks and compartments, as well as the working out of the produce, and such like matters. The law lays down that the revolution for high forest cannot be less than 60 years, and for simple coppice less than ten years. The annual cuttings are always to be determined by area, not by a consideration of the cubic contents of the stock and the rate of growth. All quantities of wood are to be expressed in cubic metres. The smallest scale permissible for the working map is $\frac{1}{144,000}$, or 4·4 inches to the mile. For small forests, not adapted to regular treatment, more simple work-

ing plans may be framed. For Forests of Protection, the Minister of Agriculture determines the system of working; but there can be no clearing, clean-felling, nor collection of dead leaves, grass, or herbs within them; and, generally speaking, they are closed against grazing.

In the State forest service, the Working Plans Branch is entirely separate from the ordinary Branch. In each Conservatorship there is a Working Plans' officer, with the necessary staff, who is immediately subordinate to the Director-General, from whom alone he receives instructions; but he is attached to the Conservator, and is obliged to furnish him, from time to time, with such information as he may require. The special Branch undertakes all valuations, surveys, maps, and working plans; it prepares all temporary plans and rules, and takes cognisance of all deviations from them or from the regular working plan; it is consulted when the alienation of any forest land is proposed, whether in commutation of rights or otherwise.

When a working plan is to be made, a draft of the proposals, drawn up on the lines above indicated, is submitted to a Committee of five members, consisting of the Conservator, the next senior Forest officer, the Divisional officer, the officer in charge of the adjacent Division, and the Working Plans' officer. All other officers and all guards who may be in the place where the Committee sits, are present, but they have not the power to vote. The report of the Committee, which includes all dissentient opinions, is submitted to the Director-General, who returns it after approval, in order that the details of the proposed plan may be worked out. When this has been done, the Committee again assembles, and having further discussed the details, re-submits the report to the Director-General. From his office, the working plan is returned to the Administrative Committee of the Department, to be examined in accordance with the Forest Law; and, after a further examination by the Inspector, it is finally approved, and its provisions are carried out. During 1885, 44 superior officers, 20 temporary *employés*, who were passed students of the Forest academy, and a staff of chain-men, flag-men, and labourers, were engaged in the work. The expenditure, in addition to salaries and allowances, was £3,989.

In the case of the communal and other forests under Section 17 of the law, the working plan must pass through the hands of the Inspector, and after discussion by the Administrative Forest Committee of the Department, must be submitted to the Minister of Agriculture, by whom, on the report of the Director-General

of Forests, it is approved. All working plans must be revised periodically.

The following statement, which does not include the provinces of Croatia and Slavonia, shows the progress made, up to the end of 1884, in the preparation of working plans :—

	Square miles.
Regular working plans approved, ...	895
Temporary " "	4,746
Felling stopped pending the approval of working plans,	1,462
Total, ...	6,603

This represents rather more than 22 per cent. of the forests in Hungary alone. The areas set forth above are owned as follows, *viz.*:—

		Proportion to the total area of each class.	
By the State,...	254	5·6	33·3 per cent.
By Communes and public institutions, ...	6,344	41·5	
By private proprietors (Forests of Protection), ...	5		

The small proportion of the State forests which has been dealt with is remarkable. It is, however, expected that the entire work in them will be completed within the next twelve years.

The mean annual yield of the Hungarian forests in wood, including that cut as thinnings, is as follows, *viz.*:—

	Cubic feet.	
From high forest, ...	753,001,177	= 46½ per acre.
" " coppice, ...	244,722,038	= 38 "
" coppice with standards,	2,267,367	= 56 "
Total, ...	999,990,582	

This is equivalent to 63½ cubic feet per head of the population. The working plans approved to the end of 1884 show the annual yield as 942,605,282 cubic feet, the surface to be cut over each year being 396,952 acres. These figures give 2,370 cubic feet per acre cut over, and 59 cubic feet as the annual yield per acre of the whole forest area.

It is said that the proportion of timber and firewood obtained from the three principal groups of species is as follows, *viz.*:—

	Timber.	Firewood and charcoal.
Oak, ...	25-40 per cent.	60-75 per cent.
Beech and other broad-leaved species, ...	3-15 "	85-97 "
Conifers, ...	70-85 "	15-30 "

In the State forests, the mean area clean-felled during the three years from 1882 to 1884 was 22,981 acres, and the produce was—

	Cubic feet.
Timber, ...	32,664,860
Firewood and charcoal, ...	53,163,882
Total, ...	85,828,742

with 3,200 tons of bark.

The mean imports and exports of forest produce during the three years from 1882 to 1884 were as follows, *viz.*:—

	Tons.	Value.
Imports, ...	139,666	£450,647
Exports, ...	618,182	2,165,864
Exports exceeded imports by ...	478,516	£1,715,217

The figures do not include considerable imports of wood from the Austrian provinces of Galicia, Carniola, and Styria; so that the excess of exports over imports is not really so great as it would appear to be from the above statement. 96 per cent. of the recorded imports and 42 per cent. of the recorded exports are transactions with Austria. Sawn deal and oak timber is exported to Germany, France, Holland, and Belgium, and large quantities of cask staves have been sent to France; but as the customs-duty in Germany has been raised during the last few years, the exports to that country have considerably diminished. The present rate of export, which, however, bears a very small proportion to the timber annually imported by the other European States, cannot be maintained much longer, and it is indeed already beginning to fall off. The supply of cask staves sent to France from Slavonia will certainly be greatly diminished within the next ten or fifteen years. It is a noteworthy fact that the principal timber-exporting countries of Europe, Russia and Sweden, are, like Hungary, commencing to reduce the quantity of wood annually exported for sale beyond their frontiers.

The purchase and sale of wood forms an important branch of Hungarian commerce. There are in the kingdom 499 dealers in timber, 1,601 in firewood, 25 in tanning bark, 221 in charcoal, and 36,798 carpenters, cartwrights, caskmakers, turners, parquet makers, and others. The sixty principal wood merchants have an average capital of over £8,000, some of them having as much as £80,000; eighty others have an average capital of £4,000. Some of these dealers buy the trees standing in the forest, (which is the system most frequently followed, though it is considered to be

prejudicial to regeneration,) and cut them up into logs. Others buy the logs, and convert them into boards and scantlings, which they dispose of, generally to a lower class of dealers with small capital; and these retail them to the consumers. Although the sale of timber standing in the forest is largely practised, a considerable proportion of the produce of State forests is sold in depôts, to which it is taken either by departmental agency or through a contractor; and it is there sold, ordinarily by auction, but sometimes by private contract, to one or more of the principal merchants, who pay for it at first-class or second-class rates, according as the depôt is within or beyond 12 kilometres, or 7½ miles, from a certain point fixed upon for this purpose in each district.

The railways require 1½ millions of sleepers a year; and, together with the Danube Steam Navigation Company, use wood to the amount of nearly 21 million cubic feet. There are 2,533 mines, smelting furnaces, and manufactories consuming wood, which among them take annually about—

4,270,000	bushels of	charcoal.
14,772,000	cubic feet of	firewood.
2,971,000	„	mine props.
1,230,000	„	scantlings.
124,000	„	planks.

The annual export of coal is 2,362,000 tons, and the mean imports and exports of coal and coke, during the three years from 1882 to 1884, have been—

	Tons.	Value.
Imports, ...	370,715	£313,069
Exports, ...	75,523	26,904
Imports in excess, ...	295,192	£286,165

The manufacture of iron, which is very largely developed in Hungary, consumes large quantities of wood in the form of charcoal. On an average, 157,000 tons of iron are manufactured annually; and 56 million cubic feet of wood are consumed by the smelting furnaces. The mean imports and exports of iron, during the three years from 1882 to 1884, were as follows:—

	Tons.	Value.
Imports, ...	105,008	£1,580,500
Exports, ...	46,408	468,320
Imports in excess ...	58,600	£1,112,180

There are 1,470 saw-mills, *viz.*:—

		Thousand cubic feet of timber.
179	Steam mills, working 320 frames, each of which can cut up annually, ...	140 to 175
69	Water mills, large, ditto 103 ditto,	70 „ 106
1,242	„ „ small, ditto 1,242 ditto,	14 „ 18

These mills are together able to cut up annually more than 88 million cubic feet of deal, or from 50 to 60 per cent. of that quantity of hard wood.

The rates obtained in 1884 for building timber, sold standing in the State forests, were as follows, *viz.*:—

	Pence per cubic foot.	
	Above 13¾ inches diameter.	Below 13¾ inches diameter.
Oak, ...	3·1	2·3
Beech, ...	1·5	1·3
Ash, Maple, Elm, ...	2·9	2·3
Spruce, ...	1·8	1·5
Silver fir, ...	1·8	1·5
Larch, ...	3·4	2·4
Scots' pine, ...	2·9	2·2

The average rate for timber of this class was therefore about 2·2*d.* per cubic foot, and about 8*s.* 10*d.* per load of 50 cubic feet, which is an extremely low rate in comparison with that obtained for such timber sold from the French forests. Firewood is sold in the forest at from one farthing to one half-penny a cubic foot.

The mean net revenue of the whole of the forests taken together is £777,000, or 8½*d.* per acre. The actual receipts and expenditure for the State forests during 1884 and 1885 were—

	1884.	1885.
Receipts, ...	£493,805	£499,754
Expenditure, ...	331,889	331,684
Surplus, ...	£161,916	£168,070

The average annual surplus for the four years from 1881 to 1884 was £180,000, or about 1*s.* an acre, which is not more than one-seventh of the surplus per acre realised from the French forests. But the figures given above do not include charges for the maintenance of the forest Branch of the Minister of Agriculture's office, amounting to £2,992; nor do those for 1885 include the sum of £14,640 expended on new buildings, and if this be added, the surplus of that year is reduced to £150,438.

The capital value of the State forests has been calculated on the assumption that the mean net revenue of £180,000 represents 2 per cent. thereof; and, thus taken, it amounts to £9,000,000, or about £2 10*s*. per acre as compared with £20 in France. The following appear to be some of the principal reasons for this remarkable difference, *viz.*:—the much larger proportion of the total area of the country which is occupied by forest (28 as compared with 17 per cent.), the smaller population (125 as compared with 181) per square mile, the less prosperous condition of the mass of the population, and the remoteness and inaccessibility of a large proportion of the forests. These circumstances tend, on the one hand, to a comparatively small local consumption; and on the other, to a reduction both in the quantity of produce exported, and in the prices which merchants can afford to pay for it to forest proprietors.

(*To be continued*).

GOATS AND FORESTS.

It would be a work of supererogation to inform foresters that, after the human Vandal, goats are the worst enemies forests can have. Nevertheless, as well attested instances of the destructiveness of goats do not occur at once to the Indian forester labouring to convince the uncompromising agriculturist of the necessity of keeping those animals out of our better forests, we cannot be too assiduous in collecting and recording such instances.

One such instance of very great value to us we obtain from the pages of the "Gardener's Chronicle."

Several French settlers in Tunis, struck by the mischievous propensities of the goat, banished him completely from their estates, the result being that what were bushes, that could never get above 2 or 3 feet in height, have now, in four or five years, acquired the habit and dimensions of trees. This result is most conspicuous in the vast estate of Enfida, near Sousse, belonging to the Franco-African Company. The Thuya covers there a very considerable area. Formerly this species formed only low bushes; now, in six years, it has attained a height of from 20 to 25 feet.

FOREST OFFICERS AND THE WARRANT OF PRECEDENCE.

The latest issue of the "Gazette of India" publishes the following Notification:—

Calcutta, the 7th December, 1888.

"No. 3104.—It is hereby notified for general information that District Superintendents of Police of the 1st and 2nd grade will take rank in the 3rd class of the supplementary graded list of civil offices not reserved for members of the Covenanted Civil Service, published with the Warrant of Precedence for India in Home Department Notification No. 2032, dated the 1st November, 1877, that is to say, in Article 77 of the said Warrant."

When the Warrant first came out in 1877, Forest officers felt that they had been snubbed, as no member of their service who was below the class of Conservator, was given any *locus standi* at all in the bureaucracy of India, although 1st grade Executive Engineers, with whom 1st grade Deputy Conservators had always ranked, found a place in the Warrant. They have hitherto suffered in silence, feeling sure that those who represent them with the Government, and who themselves are accorded a rank suitable to the dignity of their office, would point out the anomaly and have it removed. They have, however, waited in vain. For in the meanwhile other officers holding no better position than 1st and 2nd grade Deputy Conservators, have been admitted to the privilege conferred by the Warrant; and now District Superintendents of the 1st and 2nd grades have been granted this privilege. No one can deny that a Forest Division constitutes just as important a charge as a Police District, and is frequently more extensive territorially; and, in respect of emoluments, a 2nd grade Deputy Conservator draws as much pay as a 1st grade Police Superintendent under the new organisation in the North-Western Provinces and Oudh, and as 2nd grade Police Superintendents elsewhere. So that to continue to keep senior Deputy Conservators out of the Warrant is to make an invidious distinction, founded neither in justice nor in equity. Those who represent us at the seat of Government must not forget that the majority of Forest officers can never hope to rise higher than the 1st and even the 2nd grade of Deputy Conservators, and this not because they have not proved their capacity for promotion, but because the number of higher appointments is so disproportionately small. We would, therefore, appeal to the Inspector General and all Conservators to take up the case of their Department, because we feel sure that Government have only to be shown the justice of our claim to grant it. And to make the matter more certain, why should not Deputy Conservators of the 1st and 2nd grades, who feel the falseness of their position on ceremonious occasions, petition their respective Governments? MUHAFIZ-I-JANGAL.

II. Reviews.

REPORT ON THE NAGPUR EXPERIMENTAL FARM IN THE CENTRAL PROVINCES FOR 1887-88.

This is mainly a report of misfortunes and failures. The heavy summer rains damaged the kharif crops, especially cotton. The wheat was sown and came up under very favourable circumstances, but was injured by cloudy weather in January and February. The linseed crop was greatly ravaged by rust, which entirely ruined some fields. A noticeable feature in the disease was its capriciousness, the extent of its ravages differing very greatly even in the case of adjacent fields. This is the fourth year in which the linseed crop has sucessively failed, but no attempt is apparently made to study the life-history and requirements of the parasite so as to devise some means of combatting it—a work that is peculiarly a part of the business of a model farm.

A matter that has received much attention during the last three years is the use of a crop of hemp, ploughed in green, as a manure for wheat and linseed. The effect of this green soiling depends very greatly on the original productiveness of the land. In specially good soil the consequent increase in the outturn per acre may attain to a no less figure than 1,200 lbs.! In soil of ordinary productiveness, the increase last year, in three experiments, ranged from 100 to 200 lbs. per acre. These figures must, however, be accepted with reserve, as those quoted at the end of this Review show hardly any increase.

The effect of banking wheat fields, *i.e.*, surrounding them with a low wall of earth, still remains to be studied, as the experiments hitherto made have been vitiated by the double circumstance that the banks were not kept in proper repair and were too weak in places, and that the enclosed fields had not been sufficiently levelled. The Commissioner of Agriculture, who reviews the Report, thinks that the rainfall at Nagpur is not heavy enough to enable the farmer to obtain the full benefit which the practice of banking can yield. Our own opinion is that the greatest benefit is derived in districts of low rainfall, and we have seen the system yield excellent results where the annual fall did not exceed 45 inches, whereas the average precipitation at Nagpur is 50 inches.

The efficiency of different manures has been under investigation for several years past. Some of the conclusions drawn by the Superintendent are certainly premature, being founded on insufficient data. The most trustworthy figures seem to be those given by the experiments made in sixteen $\frac{1}{10}$ acre wheat plots, every two of which were treated with one and the same kind of manure. The average results of four successive years are as follows :—

Manure applied per acre.	*Average outturn per acre.*		*Percentage of increase over outturn of unmanured plots.*	
	Grain.	Straw.	Grain.	Straw.
	lbs.	lbs.		
Saltpetre, 240 lbs., ...	1,219	1,820	50	46
Bone dust, 360 lbs., ...	991	1,516	22	21
Saltpetre, 240 lbs., and bone dust, 360 lbs., ...	1,133	1,848	40	48
Cattle dung, 160 maunds, ..	940	1,560	16	25
Cattle dung, 160 maunds, and bone dust, 360 lbs., ...	964	1,385	19	11
Ashes of 160 maunds dung, ..	1,005	1,516	24	21
Crop of hemp ploughed in green, ..	833	1,252	3	..
No manure, ...	811	1,250	..	..

The preceding figures would lead to the very unexpected conclusion that saltpetre alone is more effective than the same quantity of saltpetre with bone dust added! We must await further proof before we can accept such a conclusion. Again we are forced to believe that bone dust alone gives better results than the same quantity of bone dust with farmyard manure in addition. As regards the last manure used alone, the Superintendent himself says that the results obtained are "discrepant." If we admit that the weighments were in every instance perfectly accurate, and that the experiments were otherwise properly carried out, there is only one inference, and that is, that the total quantity of manure put into the ground, when two kinds were used, was so excessive that the water in the soil had too much solid matter in solution for endosmotic action to go on unchecked from the soil into the plants. It is also possible that the quantity of farmyard manure used by itself was excessive, and that a smaller quantity would be found more efficacious. The discrepancies in the results obtained with it may also be explained by the hypothesis of retarded endosmose. The density of

the moisture in contact with the absorbing portions of the roots must obviously vary with the quantity of water in the soil, and if the soluble matters in the manure are very abundant, an excessive density must be soon reached, unless the soil is constantly and freely watered. The reader will refer with profit to the first portion of Hartig's Article on Root Parasites, a translation of which appears in this number of the "Indian Forester."

THE FOREST DEPARTMENT IN MYSORE.

THE Mysore State has set the lead to the rest of India in adopting constitutional government by convening annually an assembly of representatives, who, after listening to an account of the administrative results of the preceding year, are required to draw the attention of the Government to any local wants that still remain to be provided for, or to suggest any improvements they may desire to be made in the administration. Thus in October last the Dewan, at the command of H. H. the Maharaja, communicated the results of the administration of the Province during 1887-88. We are concerned only with that portion of the address which relates to forests.

The total revenue of the State was Rs. 1,29,76,000, of which Land Revenue furnished Rs. 85,14,000, and Excise Rs. 14,95,000, Forests coming third with Rs. 10,08,000. The importance of its forest administration to this model State is thus patent, and the officers of the State are quite alive to it.

The Dewan expressed his complete satisfaction at the results obtained in the Forest Department.

"During the past year, several State forests were extended, and a large number of valuable jungle tracts, in varying stages of denudation, were brought under proper conservancy.

"Fuel supply threatens to be the great problem of the future. The railway extension to Harihar, the advancing Kolar Gold industry, the Cotton and Woollen Mills at Bangalore, and a rising population with expanding cultivation tend to enormously increase the demand for fuel and to diminish the source of its supply. There has thus arisen the necessity for carefully conserving as large and as many jungle tracts as possible, more especially those in the vicinity of the railway.

"The spontaneous growth of timber in forests and of fuel in reserved jungle tracts, is being supplemented by plantations on an extensive scale, and the Plantation Branch of the Forest Department planted during the past year about 4 lakhs of timber trees and 4½ lakhs of fuel trees on an aggregate area of 1,481 acres, or nearly 2⅓ square miles.

"Besides these regular plantations by Departmental agency, plantations of timber, fuel, fruit and sandal trees, have been started in several Taluks under the direction of the Revenue Officers: and the cheap and efficient system of sowing the seed broadcast upon waste land after a thorough ploughing, has, wherever earnestly tried, yielded striking results.

"Sandalwood has, as usual, continued to yield a large portion of the Forest Revenue. Every attention is being given to create and maintain a perpetual supply of this valuable wood. Large tracts, with a good growth of sandalwood, have been formed into sandal preserves, and have been brought under a system of protection, while the artificial reproduction of the tree is being carried out on a definite system.

"In thus conserving forests and sandalwood tracts, the State has not been unmindful of the necessities of the ryots in the matter of grazing. Well aware that a good breed of cattle constitutes the chief wealth and prop of an agricultural community, it has conceded in a few cases the privilege of grazing in reserved forests, at certain seasons and within certain limits, on payment of a small fee.

"Elephants are becoming troublesome, and do great damage to crops, and it has been decided to organize regular annual khedda operations."

THE CAPE OF GOOD HOPE FOREST ACT.

THE Cape of Good Hope Parliament promulgated a Forest Act on the 14th August, 1888. This Act, it is evident, has to some extent been copied from the several Acts in force in India; and it may serve as a hint to our Indian Legislature to take good heed and keep their own Acts in the best order, since their influence and usefulness may extend beyond the regions for which they are immediately enacted.

On reading the Cape Act, we are at once reminded that we are in a new sphere, by observing the list of "reserved trees," all of which are new to the Indian student. Among them we observe the beautiful and now, we believe, rare, tree *Leucodendron argenteum*, whose beautiful white twigs, leaves and cones were seen in the Colonial Exhibition in 1886. The whole branchlet has the appearance of being made of frosted silver. Indeed, seeing the specimen under glass, it is at first sight difficult to believe that some one has not coated the whole with dead silver foil or paint. In India too, it was necessary to extend the term "cattle" by definition to include elephants. At the Cape it has to include ostriches! By the way, the definition is not of much use, as the word cattle only appears once (Section 11) in the Act at all.

It must not be supposed, however, that the Act makes no provision regarding cattle grazing, for it does, as will presently appear.

Every Forest Act is of course bound among its principal clauses to enact those penal provisions which are necessary, owing to the peculiar character of forests as a class of estates, and to the facility with which they are entered and injured, and the still greater facility with which their produce may be misappropriated. In this respect the Act, in detail, does not leave much to be desired. Indeed the penalties are rather strong. In *un*demarcated forest, for instance, cutting trees, &c., removing forest produce (which besides a long list of articles of produce includes "*everything* growing or *contained within* the forest"), kindling or negligently leaving alight, a fire in the forest, are the four offences recognized, and they may be punished with 12 months' imprisonment, with or without hard labour, with £20 fine, or 6 months' more imprisonment in default, and with 'corporal punishment' up to 25 "lashes or cuts" in addition, or as an alternative. This is pretty strong.

In demarcated forests, offences are classed (Sections 19-20) into two groups, as in the Burma Act (XIX. of 1881). The principle of classification is not very evident: *e.g.*, cutting *or injuring* any tree (why say "reserved *or other*"?) is treated as a major offence, while *clearing* or breaking up land for cultivation is a minor offence. Probably the latter could be held to mean land which did not bear trees. But then, by definition, the term *tree* includes bush, wattle, &c. There are other details, but this will suffice. The punishment for a major offence is 3 years' imprisonment, £100 fine, and 36 lashes as before. For a minor offence it is a fine of £10 with alternative imprisonment up to 30 days.

Penalties have, however, to be provided with reference to local conditions; and it may be that with ignorant and "thick-skinned" people, a moderate corporal punishment is the most effective, and in the end the most merciful, as a preventive.

But a more serious matter remains behind. Forest law is not only concerned with defining and punishing forest offences. It is, especially in new countries, concerned with the creation and legal constitution of forest estates, and with a settlement of the rights or servitudes that exist in the estates. In old settled countries, where a cadastral survey has long since given "a local habitation and a name" to every acre of country—where the whole is like a chess-board divided up into separate properties, each with an acreage-extent and character accurately known, the forests as a class of estates, or a peculiar form of landed property, whether

belonging to the State, to public bodies and institutions, or to private persons, are already distinguished and 'constituted.' But in new countries where the cultivated area is limited, and the population scant, there may be mile upon mile of forest and hillside and bush—all of which cannot be wanted, or cannot with ultimate economic conditions in view, be kept as 'forest.' Here then we require definitely to determine what parts of the country shall form the 'forest-estates.' We do not always know that. Certain areas, from their valuable contents, or their position at the head-waters of streams, and catchment basins, and so forth, are at once marked for preservation beyond any question. Others are not so; by the advent of a railway, the development of particular forms of agricultural cultivation, and other economic events, different conditions may arise, and then the forest will be given up.

In such cases what is needed is at least to protect the areas from wanton and needless injury *till* their destination becomes evident. It is not *necessary* in such cases to interfere with or even to define the few and occasional rights or servitudes that exist, because it is not necessary to restrict them.

If such rights are numerous, then that shows at once, that the forest *must* be permanently required, if for no other purpose, with the very object of having a *continuous* supply of material for the right-holders. In that case the forest must be made sure, and the rights 'settled.' If they are not numerous, then their exercise can do no harm, with reference to the special object of the temporary conservation.

All this was recognized—(though we admit not in the best possible form) in Chapter IV. of our own Act, *as it was first drafted.* Unfortunately by the insistence of certain opponents, the draft was altered, and then argued in Council to be meant as creating a sort of permanent forest which would get on very well without either regular settlement or definite management! Thus in India we have not yet come out of the fog in this matter, and we regret to see that the Cape Act does not deal clearly and logically with it either.

Wherever a forest is *permanently* required, the first thing to do, is to ascertain what servitudes and rights of all kinds exist in it; *and* having made full and fair provision for their exercise, or for their gradual extinction by fair compensation and equivalent, to prevent the growth of fresh rights. This last duty is a paramount one, because of our responsibility to enjoy the forest only as usufructuaries, handing on the estate—the thing itself, in undiminished productivity to our successors. If we neglect to *prevent the further growth of rights,* we do no one any good, but we

inflict a serious trouble on our successors; for should the expansion of communities, villages or institutions in the future, make it desirable to give them forest rights, there is nothing to prevent the authorities of the time making a grant, or issuing such 'license' for a term of years as may be useful. But if we carelessly or in mistaken benevolence let *rights* grow up, the end, in all probability, will be, that a generation or two hence, the forest will become unproductive and barren from over-use, or, its entire produce be swallowed up by right-holders, who have now become very numerous; and—be this well marked—while the loss to the public is complete, the gain or convenience to the right-holders, by reason of the excessive smallness of the subdivided fraction that each can command, is very small indeed.

That only a part of these necessary considerations have come under the notice of the Cape Parliament is obvious from a perusal of their "Forest Act, 1888." It is true that we outsiders do not understand the local conditions of landed-property very sufficiently, and that therefore the provisions may practically be less imperfect than they appear.

The first provision is that "Crown forest" "shall consist" (our readers will take what English they can get in this Act and be thankful for it!) "of demarcated and undemarcated forest." Nothing is, however, said of how *un*demarcated forest is known as such.

Nothing moreover is said about the settlement and record of rights, of future growth of rights, of power to compensate or expropriate in certain cases.

It is required that a temporary system of pillars having been erected, a plan of the (to be) *demarcated* forest should be exhibited in the office of the Civil Commissioner, and for three months a notice is to be published—once in each month—in the *Gazette* and in a newspaper. Any servitude-holder must then take his own action by applying to a 'court of competent jurisdiction' (whatever that may be) during these three months (if he only sees the last notice, perhaps a short time before the expiry of the period, there is no help for it, so the Act is worded).

The Court, it can be inferred (but only inferred) from Section 5, will, on application, "restrain" the declaration of demarcation, and having done so, will proceed to the settlement of the objection. We *suppose*—for the Act is wholly silent—that this involves notice to the Crown, and a power to *determine* the nature and extent of the rights claimed, and apparently contemplates nothing but *either* disallowing the objection *or* altering the limits of the proposed forest. The vagueness of the Act on this important subject will,

we fear, give rise to some trouble in application, unless the demarcated forests are all to be situated in places where objections are likely not to exist.

No provision of any kind is made for the formal record of rights. How will the Forest officers in future know what rights they have to allow and provide for in their management scheme?

In Section 8, however, the Act appears to recognize the principle of the French law, that "l'exercis des droits pourra toujours être réduit selon l'état et la possibilité des forêts." Where there is a servitude on any Crown forest (whether demarcated or not), and whether defined or recognized by order under Section 5 or not, the Commissioner may make rules "to regulate the use of the pasturage, trees or forest produce."

Grazing is here dealt with—(1), It may be "temporarily interdicted over specified areas in order to preserve the young trees growing on such areas"—so that it could not be interdicted on a bare place to enable sowing or planting to be done, or seed to fall naturally and fill up the blank. (2), Rules may provide an "annual succession of areas" over which pasturage may be exercised. To find out the penalty—if any—which attaches to for the breach of these regulations, a voyage of discovery has to be taken through the sections generally.

In the first place, *at the request of the owner*, a private or a Municipal forest may be brought under the Act. This is excellent; but when it is done the *regulations* in Section 5 will apparently not apply except (Section 9) regulations regarding the felling of certain kinds of trees "in due season only," and then a fine of £20 will be incurred in the case of a breach. In undemarcated forest the breach of regulations regarding cutting of trees and removing produce, only, is punishable (*see* Section 16). In demarcated forest (by Section 19) apparently, the grazing rules would also be enforced—in a round-about way—because by clause *c* of Section 20, "trespassing wilfully in forests closed to trespassers" (*sic*) is an offence: and it may be supposed that if a person drives cattle into a place closed to protect the young growth, or where the rule for "annual succession of areas" does not contemplate grazing—that would be trespassing.

It is sufficient here to notice once for all, that throughout the Act, the frightful English, and the bad drafting are most discreditable to the authors of the Act. Possibly Magistrates interpret at the Cape by a general sense of what the Act means, and not by what it says; otherwise they will often have not a little difficulty in knowing what to do. The drafter seems to have forgotten all

about his definitions when writing the sections, and the language he employs habitually reminds us of our dear friend the author of the immortal "*Life of Mookerjee*"—or the less famous writer of "*English as she is spoke.*" Here are a few choice phrases—taken at random—

"Any person, who however lawful it may otherwise be, sets fire," &c.

"In all cases of cutting, injuring or removal of trees * * * ; of cattle trespass ; or in any other way whatsoever, whereby any Crown forest is damaged or injured," &c.

"Whenever a person, without authority, squats, resides, builds a hut," &c.

"Forest cultivators are given temporary cultivation-permits for re-foresting."

Here is a neat definition of an "accomplice"—

(Section 36). Any person shall be an accomplice in a forest offence, and liable to the same punishment as the perpetrator or perpetrators of a forest offence :—(*a*), who by gifts, promises, threats, abuse of authority or power, machinations or culpable design, shall have instigated or compelled a forest offence."

Forest offence, by the way, is defined to mean *any* contravention of *any* provision of the Act or *any* regulation or rule made thereunder. But, it (fortunately) appears, that no penalty is provided for the breach of quite a number of contraventions: in short many "forest offences" are not punishable at all.

Though there are serious difficulties—and quite unnecessary ones—in the law regarding demarcation, settlement and record of rights, and in the matter of penalties, the Act is fortunately quite clear about all sorts of negligence with fire both inside and in the vicinity of the forest. And this is very valuable. A person, for instance, who proposes to set fire to material in the open, anywhere near a forest, must give notice of his intention to a Forest or Police officer. The provision of Section 18 is also probably locally intelligible, though we at a distance, can only make a guess that it means that Forest officers may insist on surrounding public grazing grounds by fire-paths, and may burn "dangerous grass" "as may be necessary, within a reasonable distance, for the preservation from fire of any forest" (public *or private*).

On the subject of State interference with private forests, the Act, though not at all shy of dealing with private rights, does so in an awkward and quite unsystematic manner. But one very good provision is worthy of note by Indian Students, *viz.*, Section 38, which provides that all forest owners within 5 miles of a de-

marcated Crown forest must register and use private marks, so that the produce of their forests can at once be distinguished from that of the State forest. And if they persist in exporting unmarked timber ('unstamped,' the Act funnily enough, calls it) without permission of a Forest officer, the load may be seized and detained till its origin is accounted for; and no damages can be claimed for the detention, even though in the end it should turn out that the wood was neither stolen nor being otherwise improperly transported. The legal presumption will be that the unmarked timber is Crown property till the claimant proves otherwise.

Connected with interference with private forest is also the subject of constituting permanent forest in localities where there is special need.

Two Sections appear to relate to this—Sections 7 and 14. In the former surveyors of Crown lands (about to be sold) are to bring to notice the existence of forest, or what was once forest, as well as certain dangerous features, sand-hills, &c. In Section 14, the Governor is empowered to regulate breaking up of land, felling of trees, &c., and "the manner in which pasturage shall be used," as well as the firing of vegetation, in either public *or private* forests, under certain conditions of necessity, which are enumerated as—

(*a*). Maintenance of a water-supply in springs, rivers, dams and tanks.

(*b*). For the protection of roads, &c.

(*c*). For the preservation of public health.

Nothing is said about preventing the formation of torrents and ravines, and the dangerous erosion of soil on denuded hillsides, and the deposit of injurious material, stones, &c., on lower-lying estates.

Forest officers are all invested, *ex-officio*, with powers of a police constable: and may receive certain fines, called mileage and trespass money (*cfer* Sec. 67 of our Act). Conservators and officers duly authorized by them may appear in the Court of any Resident Magistrate to prosecute forest cases.

We have now gone through the chief provisions of the Act. To summarize briefly our criticism, we may say that there are many defects of omission in minor matters, but allowing for all this, the law is substantially on the right lines, and gives in a great measure what are among the most essential of the powers needed for efficient forest administration. The serious defects are the want of proper record and settlement of servitudes, and a prohibition of their future growth. When this Act comes to a new edition, in the form of an amending Act, let us hope that the subject matter will be entirely re-arranged, and the language improved.

III. Notes, Queries and Extracts.

Retirement of Dr. Schlich.—A satisfactory arrangement has at last been arrived at, by which Dr. Schlich's services have been permanently secured for the Forestry Class at Cooper's Hill College. Dr. Schlich was deputed only four years ago to organise a course of training in England to replace the old system, under which candidates for service in India were sent for instruction to the Forest School at Nancy, and two batches of officers trained under the new system have already arrived in the country. The severance of his connection with Cooper's Hill before he had time to complete the work of organising his Department of the College would have been a public calamity. Government recognised this from the outset, but the unfavourable rules in force for the retirement of Forest officers were an insurmountable bar to Dr. Schlich's continued absence from India. The Secretary of State has now, however, seen the necessity of granting him a special pension.

Forests and Rainfall.—We printed in our issue for January 1888 an extract from a Report by Mr. H. Blanford establishing the marked favourable influence of forests on the rainfall. We are sorry to have to record that the figures used by Mr. Blanford are now proved to have been untrustworthy. Mr. Eliot, his *locum tenens*, writes as follows in the "Report on the Administration of the Meteorological Department of the Government of India in 1887-88":—

"Mr. Blanford some time ago took up the question of the influence of forests on rainfall, and found apparently very strong evidence in the rainfall statistics of the Central Provinces. The results of his investigations were given in the last Administration Report (pages 12 and 13 of the Report for 1886-87). If the rainfall returns of that province for the past 20 years could have been accepted as true, they would have established most conclusively that the extension of forests had been accompanied by a marked increase in the average rainfall of the forest districts, and that these changes stood probably in the relation of cause and effect. The conclusion, if fully established, would have been of great importance. Mr. Blanford, in order to assure himself of the value of the rainfall returns he employed in the discussion of the Central Provinces, wrote to the Chief Commissioner on the subject. The follow-

ing is an extract from the reply of the Secretary to the Chief Commissioner:—

"'The Chief Commissioner fears that the records of rainfall registered in the Revenue Department of these Provinces for years previous to 1883 cannot be accepted as altogether reliable. At ten of the stations for which you quote figures, the rainfall has been since 1869 registered at observatories in the charge of the Medical Department, but the Deputy Surgeon-General is unable to state whether the pattern of gauge has remained unchanged in those observatories since the year of their transfer to his Department, though it has certainly remained unchanged since 1876. As regards the registration effected in the Revenue Department, it is to be remarked that previously to 1887, the instruments which were used were either the Rurki rod and float, or the square self-registering gauge. In 1877 a number of Symons' gauges were distributed, but in 1883 it was found that a considerable proportion of the gauges in use were of one or other of the old patterns; and, moreover that registration was frequently effected in a very careless fashion. Since that year (1883) matters have been on a more satisfactory footing, but the statistics which were previously collected would form an unsafe basis for generalization.'

"Hence one result of the unsystematic registration of the rainfall in the Central Provinces is to postpone the decision of the influence of forests on rainfall in that area for another twenty years. It is only one of the many cases that occur in the Meteorological Department, and to which it is unfortunately more exposed than other Scientific Departments, of the worthlessness of unsystematic observation."

Further on, in the same Report, Mr. Eliot adds—

"In conjunction with the Forest Department, the question of the influence of forests on rainfall continues to form an object of enquiry. Meteorological observations have been taken for the past three years in the Ajmere forests, and sanction has been granted to their continuance for another two years, when the whole of the observations taken during the five years will be discussed and utilized, to ascertain how far the growth of forest influences the meteorological elements of humidity, temperature, and rainfall in that part of India."

In writing the above Mr. Eliot was apparently not aware that a continuous series of meteorological observations had been taken during the past four years in the Dehra Dún forests.

In the following extract from the same Report Mr. Eliot refers to the observations recently undertaken in the forests of the Sahárnpur District. For the reader unacquainted with the Western Himalayas, it is necessary to explain that a *rao* is a watercourse issuing from the hills, and having generally a broad shallow bed,

which consists mainly of boulders and shingle, and is, therefore, quite dry or almost dry, except after a continuous heavy shower. Mr. Eliot has not mentioned that in each *rao* levels are accurately taken every year along one and the same line, in order to note the changes that may occur in the section of the *rao* in consequence of the fire-conservancy of the entire basin above.

"A different method has been introduced in the Saháranpur Forest Division during the year. The object aimed at there is to ascertain the effects of fire conservancy on the *raos* of that Forest Division. Twelve representative *raos* between the Ganges and Jumna Rivers have been selected for purposes of observation by the Inspector General of Forests and Conservator of the School Circle, and in each Forest Chowki a rain-gauge is suitably placed. Five of them are located in the forest of Sakrauda, which is neither closed to grazing nor protected from fire. The rainfall measurements will be made by the forest guards, and the returns submitted to the Meteorological Department for critical examination. These observations will probably give a valuable series of data for testing the effect of different forest conditions in modifying the amount of rainfall, and hence also probably throw some light on the general question of the influence of afforestation on rainfall."

WOOD FOR CRICKET BATS.—A correspondent writes as follows to the "Civil and Military Gazette":—

"Could any of your readers kindly tell me where *wood suitable for cricket bats* could be procured in the Punjab, or any other part of India? Cheap bats are made of *poplar*, and dear ones of *willow root* and *Coromandel wood*. The bats made in Amritsar, though good imitations, seem too heavy for general use."

Readers of the "Indian Forester" could no doubt suggest several kinds of indigenous woods. The main requisites are evidently lightness and elasticity, combined with toughness, and an even shrinkage so as to obviate warping and splitting. Hence a straight even grain is indispensable. The average weight of the European willow wood used is about 33 or 34 lbs. per cubic foot, and there is, therefore, no reason why our larger and easily obtained willows, such as *S. tetrasperma*, *daphnoides*, &c., will not answer quite as well. *Populus euphratica* and *ciliata* will probably be better than any European poplar. *Alnus nitida* may also be found serviceable. Cricket is a game that is rapidly becoming naturalised, and there is scarcely a single Anglo-Vernacular School in Upper India which does not sport its cricket club. The trade in bats should, therefore, very shortly become a large and profitable one.

THE FOREST DEPARTMENT AND THE TIMBER SUPPLY OF CEYLON.—Some time ago we directed attention to the extraordinary fact that

notwithstanding the existence of the forest containing good timber in many fairly accessible parts of the Island, it was often cheaper for a tea estate to import timber for factories, such as flooring, window frames, &c., from London, than to purchase the same locally. Not only so, but many factories, to our own knowledge, are partly built of Baltic pine, such as Mariawatte, Gallaha, and Dewalakande. We have even heard of estates, with timber reserves of its own, finding it *as cheap*—we do not say cheaper in this case—to import a considerable portion of its timber requirements from home rather than fell, saw, and transport the same to the site of the factory. This must, no doubt, have been an extreme case—where the forest was very inconveniently situated. But it serves to exemplify the present position of this question very pointedly. The timber in this case cost the proprietor of the estate nothing. All he had to do was to pay the cost of sawing and of transport. Obviously the most expensive item must have been the latter. So expensive was it that the estate might just as well have purchased Norwegian pine felled from the steep slopes of the mountains of Norway, have it transported to London, and from thence conveyed to Ceylon, and so by rail to the estate. It is very evident therefore that our newly formed Forest Department, if it is to exercise that influence for good it should do, and become remunerative, must take great care that its efforts at re-afforestation are confined to places within easy access of the railway line, or else the Department will always have to face a heavy deficit. We believe it was pointed out to H. E. the Governor when at Dewalakande, by Mr. H. K. Rutherford, that although there seemingly was a lot of forest in the neighbourhood, no timber fit to build could be found anywhere. Indeed the Governor had ocular proof of the fact that, unless timber was standing on the estate itself and transport convenient, it paid better to import Baltic pine, seeing that the factory floor and the roof of the withering sheds at Dewalakande are of that wood. Up country and as far inland as Dyagama estate, pine wood is used for these and other purposes. Another instance is afforded in the Kalutara district—popularly supposed to contain large quantities of berm—when the proprietors of Glendon find it pays better to import much of the timber required to build the factory. It is no use, therefore, for the Forest Department to think that they will improve matters by conserving forests and planting up waste lands in outlying districts, as however good and plentiful the timber ultimately grown in such spots may be, its transport to a market is prohibitory. Government should plant useful timber trees along all the railway lines and roads in the colony, and on any lands they may possess in contiguity thereto, but a protest should be entered against the

squandering of public money for the upkeep of a Forest Department whose labours are not likely to benefit us, or any future generations, as far as we can see, if it confine its attention to the wides of Ceylon.

The import of timber into the island is growing rapidly, as the following figures taken from the Blue Book testify :—

Timber imports.	Value. Rs.
1885, ...	21,160
1886, ...	15,408
1887, ...	99,406

Of course, a large proportion of this is teak from Rangoon, but we find Rs. 94,450 in 1887 credited to British India, and only Rs. 888 to imports from the United Kingdom. Surely this must be due to some error, or else European timber must come *viâ* the coast. Very much more than Rs. 888 worth of timber was imported into the Island during 1887, we feel persuaded, and we must make enquiries into this matter.

We wish to bring the above facts very pointedly to the attention of Colonel Clarke, whom we credit with an earnest desire to make the Forest Department of real service to the colony. There is no shutting one's eyes to their significance. It may be very much to be deplored that large tracts of country once covered with heavy and valuable forests, have since been denuded of their leafy covering, but it is clear that if attempts be made at re-afforestation on vast tracts of country, or in places where no transport facilities exist, the venture cannot hope to be successful financially. In India, where the Forest Department brings in an annual revenue to the Government, the greatest care is exercised in this respect, and no attempt at conserving forests, which would be valueless to the public and provide no source of revenue, is made. In the low country, where valuable forests sometimes lie—as in the Eastern province—in close proximity to the coast, it is of course right that strict conservancy should for a time take the place of the ruthless waste and theft of valuable timber which has been going on [illegible] decades. But the greatest care should be exercised in sel[illegible]g for conservancy or replanting such spots as are easily accessible, otherwise all the expenditure will be in vain. Transport from one part of this colony to another, even of a few miles, is so expensive, that the existence of fine forest in the North-Western Provinces is of no advantage to any one. The few miles of carriage to an estate is more costly than 7,000 miles of over-sea conveyance, and nothing will overcome this fact. Of course the costly cabinet woods for

which the forests of Ceylon have long been famous stand on another footing. We are referring chiefly to timber for building purposes, which, to be of use and to have a marketable value, must be very easily accessible. Along the route of the railway, Government have numerous blocks of land admirably suited for the growth of useful timber trees of all kinds, whilst a belt on either side of the line might very easily be devoted to this purpose, wherever a Government reserve existed. If these were taken in hand we should feel that the Forest Department were really doing something to maintain a local supply of building wood, but, as it is, we do not anticipate any great results from the conservation of semi-denuded forests in inaccessible localities. The only conservancy of forest that we have seen is on that tract of land which lies between Nanuoya and Nuwara Ellya. To our unscientific eye it looks in its effect rather destructive than otherwise. This forest has long since been denuded of all good timber to provide firewood for the railway. What remains are the younger trees, and the Forest Department erroneously think that in process of time the land will re-afforest itself. In a few years' time we should not be surprised to find that the thick jungle left had disappeared altogether. The sweeping winds are now making short work of the young trees wherever they have been deprived of the shelter of the larger trees. Instead of the lovely drive through forest-clad hills to our sanitarium which we now enjoy, we shall in a few years, very probably, see nothing but a ghastly hillside of cheddi with gaunt and ghastly tree-trunks proclaiming the ruthless destruction involved in the present so-called system of conservation. We have not space to-day to pursue this subject further, but we have said sufficient to direct the attention of the public, and, we hope, the head of the Forest Department, to this matter.—*Times of Ceylon.*

Too good to be true.—The "Timber Trades Journal" says:—We have just seen an ingenious tool called the New Patent Folding Sawing Machine. It is an American invention for cross-cutting logs and trees, and folds up complete as a pocket knife, and one man can carry it on his shoulder, saw down his timber alone, and cut it up into logs or balks. It saws down a tree anywhere from 4 inches to 27½ inches from the ground. A man can take the machine from his shoulder, unfold it, change it to sawing on a hill-side, fold it up, and place it on his shoulder again, and perform the whole operation in less than one minute. The machine stands steady and works on any ground where two men can stand to run a cross-cut saw.

THE

INDIAN FORESTER.

Vol. XV.] February, 1889. [No. 2.

Dr. WILLIAM SCHLICH.

In our last month's issue we had just time enough, as we were going to press, to inform our readers of the retirement of Dr. Schlich. His resignation took effect from the first day of this year.

Our late Inspector General was for more than 15 years too prominent a figure in Indian forest politics for his final retirement from our midst to pass unnoticed, although during the past four years, while he has been labouring in our interests at Cooper's Hill, we have become so completely accustomed to the rule of his genial successor.

William Schlich came to us 22 years ago from the State of Hesse-Darmstadt. He studied at Giessen under the immortal Heyer, whose favourite pupil he was. Heyer, than whom no more successful teacher of Forest Economy has ever lived, foretold his pupil's future distinguished career, and singled him out from among all the thousands who had sat at his feet, as his successor in the professorial chair, which had been rendered famous during half a century by the eminent father and his no less eminent son. And there is no doubt that if India and the British Empire had not secured the benefit of his services, Dr. Schlich would now be presiding at Giessen, forming new generations of German foresters. What was Germany's loss was our gain, and therefore also the world's gain.

On the completion of his career at Giessen, the youthful Schlich passed such a brilliant examination, that on its results alone he was able at once to claim the degree of Ph. D. We need hardly say that the Doctor's degree is the only distinction conferred by the German Universities, and can be gained only by those who have carried out some original research, and have written an approved

thesis on it. Here we cannot help pausing by the way to remark how different an academic position forest science holds in India and in Germany, the foremost scientific country of the world. Here in India, with a solitary exception which only proves the rule, no Forest Officer has yet been deemed worthy of a seat in the Senates of the local Universities, although we have only to run down the list of Fellows of any of these Universities to read the names of numerous persons whose sole title to figure therein is either success in business or the mere accident of birth. There in Germany, forestry is a branch of University learning as important and respected as almost any other, and the only degree, *viz.*, that of Doctor, which the educational system of that country allows, may be gained for excellence in Forest Science.

At the age of 27, Dr. Schlich, with our present Inspector General, was selected by Dr., now Sir, Dietrich Brandis to come out to India. By this time he had already completed his probation in the Forest Department of his State, and had become a finished forester. And not only this, but he had even made his first essays in the field of forest literature, and had at that early age acquired for himself a high reputation on the Continent. Thus he came to this country not a mere raw inexperienced griff, but an acknowledged master of his profession, and possessing an intimate practical acquaintance with the working and organization of the finest Forest Department in the world.

He joined in Burma in the beginning of 1867 as an Assistant Conservator, but was promoted to Deputy Conservator in the short space of six months. He worked with such success that he constantly earned the highest enconiums from the Chief Commissioner. His great ability and industry soon forced themselves on the notice of the Supreme Government, and when in 1870 the charge of the Sind forests fell vacant, he was selected from a different Presidency and from a remote part of the Empire to fill it. This was the first time he was placed in an independent position, and he was not long in turning his opportunity to the best account. In those days (not so very long ago, however) the most crude ideas prevailed regarding the management and working of forests, and in the Province of Sind in particular, forest matters were in a very deplorable condition indeed. At the present day, only 22 years later, it is difficult to conceive that what are now the merest common-places of forest conservancy, such as demarcation and settlement, a special law, a sustained yield, systematic working, &c., were subjects that were either still under discussion or open to dispute, and were some of them not even dreamt of in many

parts of the Empire. Young Schlich had thus a completely clear field for the exercise of his rare powers of organization, and he took full advantage of his opportunities. In two short years, out of chaos and annual deficits he evolved order and surpluses.

His exceptional services did not of course pass unnoticed. Indeed they met with very early recognition, for towards the end of 1872 he was transferred to a wider sphere of usefulness in Bengal, where matters were perhaps in even a worse plight than they had been in Sind. Here in the richest and most populous province of the Empire hardly anything had yet been done either to preserve its forests or to develop its timber resources, such as they were. And to intensify the difficulty of the situation the establishment was in a complete state of demoralisation. The forests, distributed over an enormous extent of country, had to be explored and classified, measures for their demarcation and reservation had to be set on foot, the establishment and its work had to be completely remodelled, and the forest finances and accounts had to be set in order. Dr. Schlich's energy and industry, his previous varied experience and training, and his great fertility of resource and power of initiative eminently fitted him for this herculean labour. Sir George Campbell, the terror of all official mediocrities and a most uncompromising master to serve, was Lieutenant Governor; but Dr. Schlich succeeded at once in gaining his complete confidence. The work of exploration was undertaken and prosecuted with an energy that no obstacle could daunt, and the early Bengal Annual Progress Reports prove how thoroughly it was done. The charges were all overhauled and recast, and the revenues improved and placed on a safe basis. Sir George was followed by Sir Richard Temple, a ruler who, in the Central Provinces and Bengal and then in Bombay, has done more for forest conservancy than any of the other numerous great administrators who have from time to time controlled the destinies of the various provinces of this Empire. Under the new chief the difficulty was not to get things done, but to prevent them from being done too fast, and without that due deliberation so necessary for the permanency of any measure. And it speaks volumes for the sound judgment and great self-restraint exercised by Dr. Schlich that out of the large and numerous areas either actually reserved or proposed to be reserved by him, no important exclusions have yet, after a lapse of more than 12 years, been found necessary. It is superfluous to add that with Sir Ashley Eden, as with his predecessors, Dr. Schlich enjoyed the full confidence of his Government, and continued to be mentioned in the highest terms in their Resolu-

tions and letters. When in 1878 he went to Europe on a well-earned furlough, all was order and prosperity in his Department of the administration. There was a steadily increasing revenue, and a large and well-matured scheme of reservation had been sanctioned, and, to a great extent, already carried out. In their Review of his last provincial Progress Report, the Government of India tendered him their special thanks for the valuable services which he had rendered to the State.

Thoroughly recruited in health and vigour, he returned to India in 1880, and was placed in charge of the Punjab forests, a post of exceptional difficulty, and demanding the exercise of great tact and judgment, and of an intelligent firmness free of all ostentation. He had to bolster up a rapidly falling revenue and push on reservation in the teeth of powerfully supported clamours for present wasteful enjoyment. During the short time he remained in the province he had not, or was not in a position to make for himself, the same opportunities as he had enjoyed in Sind and in Bengal. He stayed long enough, however, to leave his mark on forest affairs there.

From the Punjab he was translated, at the end of 1881, to the head-quarters of the Government of India to replace Sir D. Brandis, who went on deputation to Madras to re-organize the forest administration of that Presidency. In April 1883, Sir Dietrich retired on pension, and Dr. Schlich was confirmed as Inspector General. He held this post until February 1885, when he was invited by the Secretary of State to organize the Forestry Department of Cooper's Hill College.

To the four years of his Inspector Generalship we owe several very important measures, the principal of which are (i), the re-organization of the Controlling Staff to relieve the block of promotion that had hitherto prevailed; (ii), the formation of the Imperial Working Plans Branch; (iii), a revised (the 3rd) Edition of the Departmental Code, and (iv), the imperialization and re-organization of the Dehra Dún Forest School.

The first of these measures had become absolutely essential to allay the deep discontent that prevailed among hard-working deserving officers, who had been growing sick with hope deferred. Every one is not probably aware that this measure first came under discussion while Dr. Schlich was still in the Punjab; but it was he who set the ball rolling, and carried it through successfully in spite of the financial embarrassments of the Government of India. Owing to these embarrassments, however, no wholesale remedy, such as was really required, could be adopted, and actually only temporary relief for a few years was afforded.

The second measure, certainly by far the most important of the four, was the formation of the Imperial Working Plans Branch. Up to that time the business of preparing working plans and controlling their execution was a purely provincial matter, depending mainly on the Conservator of Forests, the professional adviser of his Government. Such a system was bound to leave too much room for the play of individual idiosyncracies both in the framing and criticism of the plans and in their execution afterwards; and it thus failed to secure for them that stability, without which they must be only so much waste paper. Under the present system, even if the criticism of the central office is erroneous or based on misconceptions, an opportunity is always afforded for full discussion from both sides before a plan is finally considered and sanctioned by the Local Government; and when once it has been thus sanctioned, no control can be more effective than from an office entirely free from local prejudices and influences. A central office of control is as absolutely essential in the matter of working plans as it is in the case of accounts. As the proper management, treatment and working of our forests are the be-all and end-all of the Department, it was necessary that the ultimate control should be vested in an officer possessing the experience and prestige of the forest adviser to the Supreme Government. There is yet another justification for the present system. The provincialisation of forest business had left that Government without any real safeguard that the valuable State forests are managed in the right way, and this system now gives to it the means of watching over the working of those forests without unduly interfering with the necessary freedom of action of Local Governments.

The Third Edition of the Departmental Code was a very great improvement on the preceding ones. But as no Department of Government can remain in *statu quo*, especially a new one like ours, that Edition has served its time, and a new one is urgently called for, in which better provision shall be made for the control of the working of forests and for the collection of statistics of yield, and by which the returns to be submitted by Divisional officers and Conservators shall be simplified and rendered fuller and more logical, so that we may once for all get rid of the appalling mass and variety of Forms with which Annual Progress Reports are at present overladen.

The imperialization of the Dehra School and the modification of the system of instruction with which it was accompanied, will have almost as important results as the formation of the Imperial Working Plans Branch, and will certainly have much wider-reaching

effects. To the original eight months of purely theoretical instruction at Dehra given in two separate terms of four months each, was added practical and theoretical instruction given out in the forests during twelve months by two officers having no other work to occupy their time or distract their attention. Another important reform was the establishment of a Hindustani class for candidates for the Forester's certificate. It was necessary to invent this certificate for the benefit of backward provinces, in which a sufficient number of qualified candidates cannot be obtained to follow the course of instruction given in English. When the Department expands in a few years, the Hindustani text-books prepared for the vernacular course, and the experience gained in teaching the class of men in question, will enable the Punjab and the Central Provinces to establish at once second grade Forest Schools of their own for the training of lower subordinates ; and non-Hindustani provinces will find themselves placed in a position hardly less favourable.

Dr. Schlich's latest great achievement is the organization of the Forestry Department of Cooper's Hill College. The matter was deemed of such importance that the highest Forest officer in India was chosen for it. At the same time his other qualifications—high professional attainments, literary ability, unflagging industry, daring initiative, judicious tact, and exact knowledge of what is required for making a successful forest officer in the vast possessions of the British nation—rendered him the best man for so novel an undertaking as the establishment of a Forest School in Great Britain. Up to then every other European State of any importance had possessed at least one such school, and had long recognised Forestry as one of the liberal and, we may even say, learned professions. Great Britain alone, although possessing in her vast Empire forest resources before which those of all other countries, except the United States, are completely dwarfed, remained behind the times. She has now at last a Forest School of her own, and one at the head of it, who, if he had not entered her service, would now in all probability be the foremost teacher of forestry in Germany. He has been at his new work only four years, and has already sent out to us two batches of well-trained forest officers, and is held in the very highest estimation amongst the great foresters of Germany, who are surprised by the breadth of his information and ideas culled in a much vaster and more varied field than the whole of Europe put together can offer. The manuscript of works on sylviculture, utilisation and forest organization are already complete, and only await further corrections at the cautious author's hands to be published.

The present school has been established by and for India, simply because the Government of India is the most enlightened Government in the Empire. It now depends entirely on the British nation to utilise it for the benefit of the colonies, and make it the largest and best in the world. In order to attain this end they could not have a better teacher and guiding genius than Dr. Schlich, while the forest areas of the Empire aggregate several times the entire extent of the forests of Europe, money is no consideration, and Englishmen (using the term in the generic sense) have a greater aptitude for forest work than any other nation in the world. The result now depends entirely on the Colonial office and the pride which Englishmen will take in their National Forest School.

Within the narrow limits of this short article, we have said enough to show that Dr. Schlich has deserved well of India and of the British nation. Every body cannot be the "papa" of the Indian Forest Department, a relationship which has already at least three claimants in the field; but if Dr. Schlich cannot pretend to that honourable appellation, he can at least establish his title to a no less honourable one, that of nurse, for he nurtured and tended the child in its infancy, and has handed it over, a sturdy and well-developed stripling, to his successor. In his new sphere of activity we wish him every success, and hope that for many and many a year to come we shall continue to welcome amongst us the young foresters of his manufacture.

SAL BARK AS A TANNING MATERIAL.

For many years Captain Wood has been endeavouring to introduce the use of sál bark as a tanning agent. There can be no doubt that if the tannin in this bark is equal to that in the bark of *Acacia arabica* or *Terminalia tomentosa*, we have in Northern India almost boundless resources for the preparation of leather. The indigenous tanner being so insignificant a consumer indeed, Captain Wood has had in view chiefly the European markets, and, as bark is a very bulky article, he has from the first sent out from his forests not the bark, but an extract from it, either completely desiccated or reduced to the consistency of treacle.

This extract was prepared in a way similar to that by which catechu is obtained from the wood of *Acacia Catechu*. The bark, stripped off the wood, was cut up into pieces about the size of the palm of one's hand, and boiled in earthen pots containing enough water to cover the pieces up several inches. After bringing the

water to the boiling point, the whole was allowed to simmer for about an hour and a half, until the liquor became of a very deep red colour. The liquor was then strained off and put into another pot, in which it was boiled down to the consistency of treacle.

291 maunds of bark yielded 23½ maunds of the extract—about 8 per cent. *Terminalia tomentosa* treated in the same way gave 7½ per cent., but the bark used was from mature decaying trees, while the sál bark was taken from young, but suppressed poles. The quantity of extract per maund of sál bark increased after 31st March, when the new foliage was preparing to come out. In the case of *Terminalia tomentosa*, which brings out its new leaves later, the yield of extract diminished.

The following quotation gives the result of the examination of the sál extract at the Forest School :—

"Extract in a semi-fluid state—

	Per cent.
Water, ...	11·23
Insoluble in water, ...	5·86
Tannin, ...	16·73
Other substances soluble in water, ...	66·18
Total, ...	100·00

"Of the whole, 7·79 per cent. ashes were left.

"The colour of the iron precipitate is dingy green. The tannin is therefore of the same kind as that which is contained in *Acacia Catechu* extract. The tannin of gall apples (gallo-tannin) gives a bluish-black precipitate with iron, and is therefore different.

"There was no *catechu acid* present.

"The following is an analysis of good genuine Burmese (Rangoon) cutch, sent by Mr. Ribbentrop in January 1882 :—

Cutch, Rangoon.

	Per cent.
Catechu acid, ...	0
Catechu tannic acid, ...	7·35
Insoluble in water, ...	14·35
Soluble in water, ...	78·30
Total, ...	100·00

"Ashes in the whole 8·89 per cent.

"The method of analysis was the same in both cases, namely precipitation with gelatine.

"Captain Wood's extract was thus apparently twice as good as Burmese cutch."

A small quantity of the extract was sent for trial to the Government Harness and Saddlery Factory at Cawnpore. The report of the Foreman was as follows :—

"The concentrated essence of sál bark received has been tested and tried as far as practicable with the quantity received.

"The amount received, *viz.*, 1½ oz., was mixed with 21 oz. of water, or 14 times its own weight, and a rich brown liquor of 24° was the result. The quantity received was so very small, that its tanning properties could not be fairly tested, but judging from appearance and taste, I think it will be worth while to try it. It would be much better if it could be made solid instead of a liquid, as by doing this there is not so much fear of evaporation, which will cause the extract to vary in strength."

The report of the Superintendent ran thus :—

"The liquor obtained from the extract of sál bark registered 24° of the Barkometer, and it is probable that if a larger quantity had been sent a stronger infusion could have been made.

"I have not the means to test the extract chemically to discover the exact amount of tannin, and I cannot make a practical test of such a small quantity; but I am of opinion that the extract would give good results as a tanning agent, and it would be worth while to have sufficient extract to tan a given number of hides. Would it be possible to obtain 5 cwts. of this extract? A small sample of English logwood extract is herewith sent, to show you to what consistency the sál wood essence would be advantageous."

Some of the extract, completely dried, was sent to the English Journal "Leather" to be tested by their analyser, who reported as follows :—

"I now give copy of the analysis—

Specific gravity,	=	1·333
Moisture,	=	7·33 per cent.
Reduced to ashes,	=	0·392 ,,
Tannin,	=	32·29 ,,
Non-tannin, other acids,	=	3·93 ,,

"The colour of the solution made by the extract will be rather against its sale, but otherwise judging from its strength as about equivalent to chestnut wood extract of 30° Baumé, which is selling from £12 to £15 per ton (*i.e.*, about Rs. 6 to 7½ per maund).

"No certainty can, however, be given as to its real commercial value, until it has been tested in some tannery, the quality of the leather it produces and the cost being the principal items involved."

The results of the analyses made in the Forest School laboratory and by the Chemist on the staff of "Leather" are conflicting. Reduced to one and the same percentage of water (*viz.*, 7·33), the two results give respectively 17·41 and 32·29 as the percentage of tannin. Even if we accept the latter figure as correct, the yield of tannin would be only about 2½ per cent. of the weight of the undried bark, or, say, at the most 5 per cent. of air-dried bark. Air-dried oak bark of only medium quality contains from 10 to 12 per cent. of tannin.

If we accepted the figures of the Oudh experiment as final, we should be forced to conclude that the prospects of sál bark as a tanning material are very slight indeed. But there are two circumstances connected with the experiment, which justify us in believing that matters are not so hopeless as they would appear to be. In the first place, the bark was taken off suppressed poles, and no forester has failed to note the immense difference that exists between the bark of suppressed and vigorously growing sál poles in respect of thickness and sappiness, especially if these latter are coppice-grown. And, in the second place, we know in what estimation *Terminalia tomentosa* bark is held by tanners in many parts of India. There is hence good ground for assuming that the bark of vigorous coppice-grown sál poles will not be found less rich in tannin than good oak bark. The dark colour of the solution obtained from the extract may prove an obstacle to its general employment, but it is possible that in the process of desiccation the decoction was burnt; and even if this were not so, some means may be devised for eliminating the colouring matter. Babul bark contains a large proportion of colouring matters, and yet the leather prepared with it is not, as far as we know, of a darker hue than most of the leathers manufactured in Europe. We hope soon to be able to place before our readers the results of experiments about to be undertaken by the Forest School.

It is a disgrace to India that with an inexhaustible supply of tanning materials in her forests, she should still export to Europe shiploads of her raw hides. The great success already attained by the leather manufacturing industry at Cawnpore is sufficient proof of the fact that we can, if only the necessary enterprise and capital were forthcoming, easily compete with Europe in this as in many other industries which had formerly been considered as a speciality of the West. If further proof were wanting, we have only to add the fact, known to very few people outside the trade, that even the very best English leather has to be put through a further process of curing before it is made up into harness in

India, as the untreated leather succumbs much more rapidly to the deleterious influences of the climate. The development of the tanning industry is, however, very severely handicapped by the existence of caste prejudice, and it will be a long time before the Hindu commercial classes and the Hinduised Mahomedans of India will begin to devote their capital and their talents and energy to the development of the leather industry of their country.

As regards that industry at Cawnpore itself, owing to the approach of the Bengal and North-Western and the Lucknow-Sitapur Railways to the forests, it may soon pay to send the bark itself, properly dried, to the Cawnpore market. If so, the Oudh forests alone will be able to produce more sál bark than the whole of the Cawnpore tanneries will ever be able to consume. At present, however, the tanners there are too much wedded to the use of babul bark to take up a new tanning substance, the effectiveness of which has yet to be proved. Babul bark of first-rate quality is obtainable in sufficient quantities for present requirements, and hemlock spruce bark is added to the babul bark liquor to keep up its strength and to feed the leather.

A NEW SPECIES OF MAHOGANY.

Swietenia macrophylla, G. King.—Under this name was described in Plate 1550 of Hooker's Icones Plantarum, in 1886, a new species of mahogany, whose existence was brought to notice in rather unusual fashion. In 1872 seeds of 'mahogany' were sent by the India Office to the Royal Botanic Gardens in Calcutta. They were said to have been collected in Honduras. As soon as the seedlings were a few inches high, it was seen that they were different from those of the true mahogany, and they were accordingly planted out under the name of '*Swietenia* species.' In their twelfth year many of the plants had already reached a height of 20 feet, and had begun to flower freely. In 1885 many of them yielded capsules containing good seed, thus presenting a marked contrast to the habit of those of the true mahogany, which does not seed until it is 30 or 40 years old, and even then only very sparingly. The tree was consequently described as a new species by Dr. King, this being one of the rare cases in which a West Indian tree has been newly described in the East Indies.

There are beautiful avenues of this new mahogany in the Calcutta Gardens, and seeds and plants of it have been distributed for growth elsewhere. So far as can be judged from young specimens,

the wood has a rather lighter colour than that of *S. Mahagoni*, and somewhat different structure, but the quick growth of the new species, and its habit of producing good seed in quantity, make it a desirable species to cultivate.

J. S. G.

A NEW VIEW OF JARDINAGE.

M. Ad. Gurnot, a distinguished French Forest officer, has recently published several pamphlets regarding a new application of jardinage, which he has termed "*La méthode du contrôle.*" In defining and discussing the advantages of his system he compares it with what French foresters call "*La méthode naturelle,*" which will be found fully described in Messrs. Fernandez and Smythies' translation of Bagneris' *Manuel de Sylviculture.** For those readers who are not acquainted with French forestry, it is necessary to say at the outset that this latter method is, in the estimation of French foresters in general, and of the French Forest Schools in particular, the sole one worthy of consideration, the only two other methods they adopt, *viz.*, jardinage and coppice, being relegated the one to mountain tops, small woods and protective fringes, the other to State forests still under conversion into high forest, and to coppice woods belonging to necessitous proprietors unable to afford the expense of conversions.

In describing M. Gurnaud's system we cannot do better than translate an account of it given in the *Revue des Eaux et Forêts* for March 1888, which acccount has received that gentleman's approval.

"M. Gurnaud discusses his system under the two following heads :—

(1). Jardinage considered as a method of treatment.
(2). Determination of the yield in jardinage.

I.—Jardinage as a method of treatment.

"The word 'jardinage' is often considered as synonymous with disorder, confusion, and faulty and extensive working. The system has fallen into such discredit that our forest schools hardly treat of it except as a matter of mere form, and mention it only to

---

* German foresters will recognise this method under the title of *Femelschlagbetrieb* (Heyer). As regards the procedure for securing the regeneration of the old crop, the system will be found treated at length in Fernandez' "Rough Draft of a Manual of Indian Sylviculture" under the designation of the "Uniform Method."

banish it to the most remote heights of our mountain ranges. In M. Gurnaud's opinion the manner in which the above condemnation of jardinage has been arrived at is rather summary. The disadvantages of the method are more apparent than real, and can, he believes, be got rid of or minimised without causing its total rejection.

"A forest worked by jardinage is in a state of regeneration over its entire area. This of course means that trees of all ages are mixed together, but it by no means excludes the idea either of systematic work or of rational treatment. On the contrary, methodical and progressive exploitation can perhaps less be dispensed with here than in any other method of treatment, and must be secured by dividing the forest into a certain number of permanent coupes.

"The regeneration fellings may be located in successive order, and made on the combined basis of area and volume just as well as in the *Méthode naturelle;* and cleanings, thinnings and other fostering operations become here of paramount importance for the constitution of the upper stage of growth, by means of individual attentions paid to the most promising and valuable trees. Thus understood, jardinage really becomes a most intensive method of treatment.

"The 'natural method' is based on the idea that the forest to be treated is composed of similar elements (crops) so constituted as to run through a complete cycle of work and growth fixed for them beforehand. The idea, perfectly *natural* nevertheless, of a tree as an individual disappears and is replaced by that of the crop. But we know that in a state of nature, particularly in mountainous regions, marked differences present themselves in the size, vigour and mode of development of two neighbouring trees, and that these differences become more and more pronounced with age. So the uniformity sought after for the crop as a whole can be realized only by sacrificing the better individuals and preserving those that are inferior. Once the crop has been formed on the lines fixed for it by the usual succession of fellings, nothing in the world can make it leave those lines. The means of afterwards modifying its constitution are very restricted and partial. Indeed, it is only at the close of the current rotation that the forester will be able to judge of the results of his work, and not before that moment will he be able to effect or introduce any changes of a radical nature. Whatever happens, unless he chooses to completely upset all the provisions of the working plan which it has cost so much labour and thought to devise, he must wait until the rotation is over.

"The forest worked by jardinage possesses in this respect a very material advantage over one presenting a gradation of ages. In the former the unit of work and treatment is the tree. Each individual unit becomes conspicuous as soon as it has got above the stage of the underwood, that is to say, from a very early age. At each felling, whether it be for regeneration or for improving the constitution of the crop, the trees are, so to say, all passed under review, and the best are left to form the upper story, which is thus constantly recruited from the most promising individuals of an underwood that forms a permanent protective covering over the soil. Constituted in this manner, the upper story consists of trees having free room to develop on every side, and thus puts on new wood at a very rapid rate. The frequent return of the fellings to one and the same point enables the forester constantly to watch the results of his operations, and to correct or modify his mode of working accordingly. The main end of conservation, *viz.*, the improvement and enrichment of the forest, becomes the direct object of every intervention on the part of the forester, who has thus in his hands all the means necessary to rear his forest in the desired manner. But this elasticity requires on the part of the forester great sagacity, close attention and a perfect grasp of the details of present as well as of past work. Thus, for instance, it would never do to entrust to a mere guard the selection and marking of the trees to be felled. The delicate nature of the individual operations increases in the same proportion as the intensity of culture.

"The application to sylviculture of the theory of the highest rate of interest on capital invested has shown the unsatisfactory position, from a financial point of view, of forests presenting a gradation of ages. Pressler has said of the 'natural method' that it is '*zuwachslähmend*' and '*finanzwidrig*.'* Jardinage prevents the accumulation, by compound interest, of large capital sums in relatively small areas. The return, at short intervals, of the fellings to the same points is equivalent to a frequent realization of the periodic increment of capital. Hence in a forest under jardinage, the capital is more actively employed than in the forest treated by the 'natural method.'

"The tendency of the present day is to seek small units of work. Jardinage, *i.e.*, a methodical and intensive jardinage, is, in the opinion of M. Gurnaud, most in keeping with this tendency, and in the various attempts made to get rid of the admitted disadvantages of the so-called natural method, such as the method of '*fu-*

* Growth-paralysing and opposed to financial principles.

taie claire,' the *Vorverjüngungsbetrieb* of Pressler, the 'jardinage thinnings' of Borggreve, and the *Bestandswirthschaft* as defined by Judeich, this French author sees only so many steps taken in the direction of jardinage.

II.—Determination of the yield in jardinage.

"The difficulty experienced in determining the yield in jardinage has perhaps not been unconnected with the disfavour in which the system itself has been held. Nevertheless, if we wish to improve and increase the stock of a forest, it is absolutely necessary to know how much can be taken out, and then never to fell more than that quantity. M. Gurnaud gives us, in order to determine this quantity, a very simple device, a device that is perhaps too simple for its acceptance by some people. Briefly it is this:—Bring together the results of two consecutive enumeration surveys; to their difference add the quantity of produce that may have been taken out in the interval between the two valuations, and divide the total by the number of years in that interval; the quotient is the figure sought. This figure is obviously exactly equal to the mean annual increment, so that taking out yearly just so much and no more necessarily guarantees a sustained yield. The means of increasing the stock must be looked for in the selection of the trees to be felled, rather than in devices for saving up a part of the yield.

"The method of determining the yield just described is based exclusively on facts; no method founded on mere speculations regarding the normal condition can be applied to forests worked by jardinage. What the normal condition is still remains to be defined, even in respect of regular forests, and is therefore an abstraction still more difficult to conceive in respect of forests under jardinage. Besides this, the various methods hitherto invented for determining the mean annual increment are inapplicable to crops under jardinage. Thus in such crops there is nothing left for us but fix the extent of the fellings by the control books, in other words, by means of frequent valuation surveys of the standing stock.

"M. Gurnaud's method is based exclusively on the present condition of the forest, and, as regards the future, is concerned only with improving the conditions of production. Each successive survey will show at once what changes have occurred since the preceding one, and as this interval will never be long, the sum total of the annual fellings will be changed whenever a change becomes necessary.

"In M. Gurnaud's method there is of course no rotation in the strict sense of the term, but only a rotation of coupes. Since the

idea of a crop as a unity does not exist, there can obviously be no common term of exploitability for all the trees composing the crop. The age and the minimum size of the trees to fell must vary in each case with the time and the place ; and, as M. Gurnaud says, the control books will at once afford all the facts necessary for a solution of the problem. Thus every forest becomes a field for local experiment, the results of which are recorded in the control books ; from the combined results will be evolved the rules of work for the future.

" M. Gurnaud believes that with this method of treatment forest culture will pay at least as well as any other mode of utilisation of land, a result that will constitute the very best guarantee for the conservation of forests and the general popularity of sylviculture."

The author of the article, of which the preceding is a translation, concludes with a hope that the same amount of money, time and talents may be devoted to the working out of M. Gurnaud's views of jardinage as has been consumed in building up the 'natural method,' believing that the expectations of that distinguished forester in regard to his method will probably be realized to their fullest extent.

The preceding article is followed in the April Number of the same *Révue* by an important contribution from the pen of M. Gurnaud himself. Omitting the first four paragraphs of this paper, we give below a translation of the remainder, in which the author explains from his point of view the essential difference between the 'natural method' and his practice of jardinage.

" In the so-called natural method the determination of the length of the rotation is really founded on a mere hypothesis in respect of the rate of growth. Even this hypothesis cannot be reconciled with fact, except by forced observance of certain rules laid down for the purpose. And the rules themselves form the subject of laboured teaching, and are full of uncertainties.

" With the '*méthode du contrôle*' all hypothesis disappears, and the actually observed current rate of growth serves as basis both for the treatment and for the organisation of the forest. A comparison of the results of enumeration surveys of the stock shows exactly, coupe by coupe, to what extent the trees of each girth and species class have contributed towards the sum total of increase of production and, therefore, to what extent they can be drawn on for the yield of the next sub-period without trenching anywhere on capital. The annual fellings purge the crops of undesirable elements, and improve their growth as well as their composition. They constitute a continuous series of operations which lead gradually

but surely to the establishment of the normal state, and the guiding principles of which are derived directly from the facts of the control books, and may be made the subject of very high-class teaching of no uncertain character.

"The normal state is that condition of the stock in which, by means of the annual increment, the crop is enabled to yield the largest financial outturn of which it is capable. Once this condition is attained, it soon begins to disappear owing to the accumulation of surplus material, the result of the annual growth, and it is by the removal of this surplus in each size and species class that the normal state must be periodically established.

"The new principle which I have been recommending hence consists in anticipating the natural issue of the struggle for existence between trees of different ages growing together, by executing jardinage fellings, whereby the trees interfering with the development of the future victors are removed progressively, but in a timely manner. It is diametrically opposed to the principle of the struggle for existence, prepared from the earliest age of the seedlings and expressly maintained up to the age of exploitability by the removal of every individual that violates the conventional uniformity, between plants of one and the same age and vigour.

"My system is founded on the periodic counting and measurement of the timber trees composing the upper story of growth. Comparison of the results of this survey, a mode of control that is capable of application in every forest, reveals at once the principles on which the jardinage should be made, and proves the absolute superiority of jardinage as a method of treatment over every other method.

"I have been employing my system during the past 25 years under a great variety of conditions of soil, climate and species. Everywhere I have found it lead to the restoration of forests injured by overworking, to the replenishment, without any sacrifices, of incomplete stock, to an increase of revenue, and to the raising of the profits of forest culture to so high a figure as to render this latter safe against the competition of any other mode of utilising the land.

"In forests that are already well-stocked, these results are, of course, obtained much more rapidly, and the yield of the annual coupes is at once very largely increased."

We will reserve for our next Number our comments on the view of jardinage set forth in the foregoing paragraphs. At the same time we earnestly invite discussion in these pages of a subject of such vital importance in Indian forestry as jardinage.

FORESTRY IN HUNGARY.

CHAPTER I—(*concluded*).

(*Continued from page* 27).

Rights of User, Forest Offences, Game.

The rights which existed prior to 1848, and related chiefly to firewood and pasture, but sometimes also to timber, have in a great measure been commuted; but much remains to be done in this direction, there being still 514 communes to deal with. Before 1884, however, the rights held by 628 communes in the State forests had been commuted or regulated, and negotiations were pending in 147 others. It appears from the record that there are now only 6 communes, holding rights in the State forests, in which the question has not yet been taken up. As compensation in lieu of grazing rights, many communes received forest-land with trees growing on it; but, in a large number of cases, they had hardly entered into possession when they proceeded to clean-fell the timber; and the consequence is that these areas, which, if properly managed, would have afforded ample fodder for the cattle, and a certain amount of wood also, are almost completely ruined, and scarcely produce any grass. It is said that, even when all rights have been commuted as far as practicable, it will be necessary to leave from 30 to 40 per cent. of the entire forest area open as forest pasture; but if this be the case, measures must be taken to prevent denudation.

Under the head of Infringements of Rules (*Contraventions*) are classed all acts and omissions provided against by the Forest law, which are committed by the proprietor, his family, agents, or workmen. For instance, if a proprietor treats his forest in such a manner as to endanger its existence; if he cuts down a Forest of Protection, or a forest of any sort on ground incapable of being used as fields, meadows, gardens, or vineyards, he is guilty of an act of infringement. The proprietor of a forest under Section 17 of the law, who cuts more timber than is allowed by the working plan, has to pay a heavy fine, and to replace the excess quantity cut by refraining for the necessary time from the ordinary annual fellings. All other contraventions of the provisions of the working plan, such as the extraction of stumps and roots, pasturing of cattle, and the collection of dead leaves, grass, or herbs, are punishable by fine. Among punishable omissions may be mentioned the following, *viz.*:—non-submission of proposals for the working plan,

non-employment of the necessary establishment, non-exercise of proper supervision, omission to re-plant or re-sow to the extent prescribed by law. Heavy fines can be inflicted for such omissions, as well as for neglect to report the resignation or dismissal of an *employé*, and for failure to observe the standing orders for the prevention of forest fires and attacks by insects, or the regulations regarding the transport of rafts and logs.

Among Forest offences *(délits)* are classed thefts of unfashioned produce, if its value and that of the damage caused are together not more than 30 florins (£2 8*s.*); damage of any sort to the value of less than 30 florins; dangerous acts and omissions without regard to value; and the purchase or sale of produce the sale of which has been prohibited. Such offences may be disposed of administratively by the mayor or head of the police. But thefts and damage to the value of more than 30 florins, acts and omissions which have resulted in a forest fire, thefts of fashioned produce, and the illicit collection of seeds, are offences punishable under the ordinary law only. They are to be tried at once, taking precedence before all other cases. The delinquent pays the value of the stolen goods, as well as compensation varying in amount from one-quarter to the whole of the estimated damage he may have done; and, except in cases of theft of dry wood, branches, shrubs, broken pieces of wood, bark, acorns or other fruit, he pays also an amount equal to the sum of both these together into the Forest and Charitable Funds.

Between 1881 and 1884, the following cases of Infringement of Rules and Offences occurred :—

	Infringements.	Offences.
Acquitted on appeal, ...	17	5,830
Confirmed, ...	171	36,179
Total,	188	42,009

The fines amounted to £7,070. The number of such offences in the State forests alone, dealt with in 1884 and 1885, was 49,529 and the fines amounted to £9,812.

There is a great deal of game in the country; and it is, owing to the introduction of laws for its preservation, decidedly on the increase. In the Carpathian Mountains are found the bear, wolf, lynx, red-deer, and roe-deer; also hares, partridges, capercalzie, black game, and others. Before 1872, proprietors of land had not the right to prevent other persons from pursuing game over their property. But in that year it was enacted that the right of shoot-

ing and hunting belonged solely to the owner of the land, and a close time for each kind of game was fixed. A law passed in 1883, however, does not allow this right over a property of less than 200 *arpents* (284 acres) in extent; but small proprietors, owning not less than 50 *arpents* (71 acres), may unite together to make up the required area, and they can then secure the sole right to pursue game over it. Proprietors who have less than 50 *arpents*, or do not join with others to make up 200, must farm their shooting with that of the communal land, and they then receive a proportional part of the income derived from it. Guns are taxed, and shooting licenses have to be taken out, poaching being severely punished. Sworn forest *employés* are exempt from the gun and license tax, but can only shoot within the limits of their own charge and with the consent of the proprietors of the land.

It is said that during 1884, 1,102,926 head of game, including 280 bears, and valued at £53,200, were killed on about one-third of the Hungarian territory; and it is probable that the game killed in the entire country was worth nearly £100,000.

There is a national sporting society, with 1,200 members, which watches over the interests of the chase. It has recently introduced the wild sheep *(moufflon)* and the wild turkey into Hungary.

Forest Schools.

The Academy at Selmeczbánya.—The institution at Selmeczbánya was opened as a school of mines in 1770; but a forest class was added in 1808, some idea of the development of which may be obtained from an inspection of the following figures, showing the numbers of forest professors and students at various periods :—

	Professors.	Students.
1808- 9, ...	2	22
1809-10, ...	2	57
1814-15, ...	2	5
1821-22, ...	2	29
1833-34, ...	2	13
1865-66, ...	2	82
1867-68, ...	5	35
1872-73, ...	6	96
1873-74, ...	6	134
1882-83, ...	6	222
1884-85, ...	6	287

The Forest Branch is now by far the most important, there being 325 forest students but only 80 miners. A forest officer of high

rank has charge of it, under the control of the Director who is a mining engineer.

Young men who have completed their studies at the High School, and passed as Bachelors of Letters or of Science, are eligible for admission. The ordinary course of studies extends over three years, but candidates for appointments as forest engineers remain an additional year, in order to complete their studies in mechanics and architecture. All regular students must go through the entire ordinary course, and are examined every six months before a special commissioner, in order to test the amount of progress they have made. Fees are not charged, and twenty scholarships of £24 each are given to those among the poorer students who are found to have done the best.

The courses of mathematics, physics, geometry, and architecture, which are conducted by professors belonging to the school of mines, are the same for the miners and the foresters, and there are no special professors for chemistry and forest botany. In the opinion of the heads of the Forest Department, the present organisation is unsatisfactory, the following being the principal objections taken to it. The school is under the Minister of Finance, instead of under the Minister of Agriculture as it ought to be, for he is charged with the control of both the forests and the mines. The subjects common to both Branches are taught rather from the miners' than the foresters' point of view, to the prejudice of their application by the forest students to their profession. The Forest Department hopes that these drawbacks will be considered by the Government, and that the school will be reorganised on a new basis.

There is a magnificent library, and also a museum containing splendid collections of various kinds, such as minerals, rocks, botanical and entomological specimens, samples of raw and manufactured produce, sections of wood, and many other things. The museum also contains models of forest engineering works, kilns, tools, and apparatus for felling and converting timber, as well as a collection to illustrate the diseases of trees, especially those caused by fungi of various kinds. Some forests near the school are placed under the control of the Director for purposes of instruction, and the students make annually one or two forest tours with their professors.

There is a second school, with about 50 students, at Körös in Slavonia, but it is not in a satisfactory state and is about to be reorganised.

Mention has previously been made of the State Forest Examina-

tion, which, in addition to that of the academy, must be passed by all candidates for the superior service before they can be appointed. The committee under which this examination is conducted is composed of twenty members, nominated every six years by the National Forestry Society from among State or other forest officers, but appointed by the Minister of Agriculture. The president, who has the right to select annually from among the members of the committee three commissioners to actually undertake the examinations, is the Director-General of Forests. The candidates, who pay an entrance-fee of £2 each, are examined in the following subjects, *viz.*:—Sylviculture, working of forests, valuation surveys and working plans, construction of machines and buildings, forest protection, control of hunting and shooting, organisation of the forest service, functions of the various grades of officials, forest law, and the commutation of rights; they are also required to show themselves capable of taking independent charge of a forest estate. On passing this examination, they receive a diploma. Of the 210 candidates who were examined during the five years from 1880 to 1884, 160 passed and 50 were rejected. Every year, one of the most promising among the young forest officers who has passed the examination is sent abroad to study forestry in other countries. He receives an allowance of £80 towards his expenses.

Secondary Schools.—Two secondary schools are supported by the National Forest Fund, one at Királyhalom, near Szeged, opened in 1883, and the other at Vadászerdö, near Temesvar, opened in 1885. A third is about to be established in Transylvania. The course of instruction, which lasts two years, is both theoretical and practical; the students, of whom twelve are admitted annually to each school, are taught the science of forestry to a sufficient extent to enable them to perform their duties satisfactorily, and to train and guide the workmen employed under them. They are maintained at the school either by the State, or from the National Forest Fund, or by private persons. Those sent up privately pay a yearly contribution of £12 for their lodging, food, and clothes. The age of admission is from 17 to 35, and candidates must be of sound health, particularly as to hearing and sight, and have a good knowledge of reading, writing, and arithmetic. Each school has a staff of three forest officers, one of whom acts as Director. An increased number of schools is required, especially in the north and west of Hungary. It has been previously said that forest subordinates are required to pass the Forest Guards' Examination. This is held in various towns throughout the country, before a committee of forest officers presided over

by the local inspector. Of the 976 candidates who were examined during the five years from 1880 to 1884, 827 passed and 149 were rejected.

The National Forest Fund.

This fund is mainly supported by the payment into it of four-fifths of the fines levied from persons convicted of forest offences, the remaining one-fifth being paid to the communal charitable fund, so that the commune is interested in the conviction of offenders. If the proprietors of forests which are under the provisions of section 17 of the law compound offences, they must pay into the National Fund one-half of the sums so received.

The receipts and expenditure of the fund during 1884 and 1885 were as follows, *viz.*:—

	1884.	1885.
Receipts, ...	£2,000	£2,080
Expenditure, ...	2,400	2,668
Deficit, ...	£400	£588

The law provides that one-fifth part of the gross income must be annually capitalised, so that in the course of time the revenue will be increased by the interest on the money so invested. The fund has now a capital of £8,800, including about £3,200 worth of school and other buildings. Its revenues are devoted to the following purposes, *viz.*:—The cultivation of plants for stocking bare ground; the maintenance of secondary schools, including the salaries of the professors and the support of a portion of the students; the holding of the State Forest Examination and of the Forest Guards' Examination; and the publication of professional works. The revenues are not, however, sufficient to cover all these charges, and the deficiency is made good from the general forest budget of the State.

The National Forest Society.

The society, consisting at the present time of about 1,500 members, was founded in 1866, and has a capital of £16,000. It renders excellent service to the cause of forestry in Hungary by giving an annual prize of £44 for a work on a professional subject, as well as by publishing a monthly journal, and in other ways. It grants an allowance to the widows and orphans of forest officers who have been members for five years, if they have been left in poor circumstances.

(*To be continued.*)

THE DOUGLAS FIR IN SCOTLAND.

AMONGST the exotic timber trees which have been introduced into Europe during the present century, the Douglas fir has attracted more notice than any other species, owing to its remarkably quick growth during early youth. Specimens growing in free positions are believed to have laid on a mean annual increment of as much as 3 cubic feet, while only 1 cubic foot, at the outside, could be expected of a larch tree; and even in a few fully stocked woods the increment appeared exceedingly great.

In the "Gardeners' Chronicle" of October 8th, 1887, p. 427, an extract from the "Perthshire Constitutional" was published, which drew attention to the oldest pure wood of Douglas fir, situated at Taymount in Perthshire, on the estate of the Earl of Mansfield. The plantation in question is spoken of in glowing terms, but only a few scanty measurements are given, so that it is difficult for the reader to arrive at any definite idea of the progress of the plantation, whereby he can compare it with that of our indigenous timber trees. Besides being of very rapid growth, it has been claimed for the Douglas fir that it is not liable to disease—an advantage, which, if it really did exist, would be of great weight.

Such general statements are often misleading, and I determined to take the first opportunity to enquire somewhat more fully into this matter. Accordingly during a short tour in Scotland in July last, I measured a sample plot in the Taymount Douglas fir plantation, and I also measured, by way of comparison, a sample plot in an adjoining Scotch pine plantation. The results of these measurements seem to me of sufficient interest to deserve publication.

The plantation of Taymount is situated about 7 miles to the north of Perth, in 56½° northern latitude, and at an elevation of about 200 feet above the level of the sea. The ground slopes very gently towards the south-east, and the soil consists of so-called "stiff till," which in this case may be described as a loamy clay, retaining moisture well. The quality of the locality may safely be given as first or best quality for the growth of trees. The rainfall has been put down at 28 inches annually. The area of the plantation amounts to 8 acres, and this was planted by Mr. William M'Corquodale, the senior wood manager in Scotland, in the spring of 1860, in the following manner:—Douglas fir, four years old, 9′ × 9′; larch, four years old, one between every two Douglas firs, and an additional line between every two lines of fir, so that the plants stood 4½′ × 4½′, each acre containing 2,151 plants, of which 538 were Douglas fir, and 1,613 larch. The plants of Douglas fir used were four year old seedlings, that had been transplanted into

nursery lines in their second year. The plantation made a good start, and the firs are said to have taken the lead at once. The larch were gradually thinned out, until the last disappeared before the year 1880, since which time the plantation has been one of pure Douglas fir. The first regular thinning of the Douglas fir occurred in 1887. Before that thinning, about 277 trees remained per acre, the remaining 261 having gradually disappeared during the previous 27 years. Of the 277 trees 75 per acre were thinned out in 1887, so that now, in 1888, the countings showed 202 trees per acre.

No accurate statistics are in my possession regarding the material removed in thinnings up to date. At the present moment the area is well stocked, and any small interruption of the leaf canopy by the thinning of 1887 will disappear by the end of 1889, when the cover overhead will, barring accidents, be again complete. Thus, the thinning of 1887, though fairly heavy, was by no means too heavy.

On a sample plot, measuring four-tenths of an acre of average appearance, all trees were carefully measured by myself personally on July 20th, 1888, at height of chest, or 4 feet 6 inches from the ground; a selected sample tree was felled by the kind permission of Mr. M'Corquodale, carefully measured, and thus the cubic contents or volume of the tree ascertained, separated according to solid wood and branches. The former includes all wood over 3 inches diameter at the small end. In the present case none of the branches measured as much as 3 inches in diameter, so that the solid wood represents the stem of the tree from the ground up to a diameter of 3 inches. The following Table shows the growing stock per acre:—

Diameter of Tree at 4 feet 6 inches above the ground, in inches.	Number of Trees in each Diameter-Class.	Total Sectional Area at 4 feet 6 inches, in square feet.
4	3	·26
5	12	1·64
6	3	·59
7	7	1·87
8	10	3·49
9	17	7·51
10	15	8·18
11	33	21·78
12	20	23·56
13	35	32·26
14	17	18 17
15	20	24·54
16	8	11·17
17	2	3·15
Total, ...	202	158·17

From the above data it follows that the average sectional area per tree is $= \frac{158 \cdot 17}{202} = \cdot 783$ square feet, which corresponds to a diameter of 12 inches.

The sample tree, of average development, which was felled, showed the following dimensions :—

Diameter at 4 feet 6 inches above the ground, ...	11·78 inches.
Sectional area ,, ,, ,, ,, ...	·757 sq. ft.
Height, ...	60 feet.

At 48 feet from the ground the stem showed a diameter of 3 inches, and here the top was cut off. These 48 feet were divided into eight sections of 6 feet length each, each section measured in the middle, and thus the following data obtained :—

Number of Section.	Length of Section, in feet.	Mean Diameter of Section, in inches.	Volume of solid wood in each Section, in cubic feet.
1	6	12·5	5·11
2	6	10·0	3·27
3	6	9 5	2·95
4	6	8·5	2·36
5	6	7·0	1·60
6	6	6·5	1·38
7	6	5·0	·82
8	6	3·5	·40
Total, ...	48	...	17·89

The top, 12 feet in length, and the branches, were stacked, and found to fill a space of 50 cubic feet, which may perhaps be put as equal to $50 \cdot \times \cdot 15 = 7 \cdot 5$ cubic feet of solid wood. In the present paper this wood will not be taken into account.

From the contents of the sample tree, the volume of solid wood per acre was calculated according to the following equation :— Volume of sample tree : volume per acre = sectional area of sample tree : Sectional area of all trees per acre ; or $17 \cdot 89 : x = \cdot 757 : 158 \cdot 17$, and x = volume per acre $= \frac{17 \cdot 89 \times 158 \cdot 17}{\cdot 757} = 3{,}738$ cubic feet of solid wood over 3 inches in diameter, exclusive of top and branches.

By dividing the volume by the age of the trees (32 years), the average annual production of wood is obtained $= \frac{3738}{32} = 117$ cubic feet, exclusive of previous thinnings ; or, if only the time since

planting (28 years) is taken into account:—Average annual production of solid wood $= \frac{3738}{28} = 133$ cubic feet, exclusive of previous thinnings.

By way of comparing these results with the production of one of our indigenous trees, I measured the trees on a sample plot of one-tenth of an acre—in a very uniform plantation of Scotch pine, situated at a short distance from the Douglas fir plantation. This Scotch pine plantation had been established in a somewhat elevated spot, which was formerly of a swampy description. The locality must be classed as of second quality only, compared with the locality in which the Taymount Douglas firs grow. It was drained and planted in 1847—that is, 41 years ago—with four year old plants of Scotch pine; it has been thinned three times, and it will again be thinned in 1889. On July 20th, 1888, the area was fully stocked. Omitting all suppressed trees, the survey yielded the following results:—

Diameter of Tree at 4 feet 6 inches above the ground, in inches.	Number of Trees in each Diameter-Class.	Sectional Area at 4 feet 6 inches, in square feet.
5	40	5·45
6	70	13·74
7	70	18·71
8	90	31·42
9	100	44·18
10	70	38·18
11	40	26·40
12	10	7·85
Total, ...	490	185·93

It will be noticed that this plantation shows a greater sectional area per acre than the Douglas fir plantation.

The mean height of the wood was found to be 45 feet, and from the available data it was ascertained that the volume of solid wood (3 inches diameter and upwards) amounted to 5,015 cubic feet per acre. By dividing this number by 45 (the total age of the trees), I obtained the average annual production of solid wood $= \frac{5015}{45} =$ 111 cubic feet, exclusive of previous thinnings; or, if only the time since planting is taken into account, average annual production of solid wood $= \frac{5015}{41} = 122$ cubic feet.

If now we compare the average annual production of Douglas

fir and Scotch pine, we find Douglas fir = 117 or 133, against Scotch pine = 111 or 122 cubic feet; here, then, is an almost inappreciable difference, especially if it is considered that the quality of the soil in the Scotch pine wood is decidedly inferior to that of the soil in the Douglas fir wood. Unfortunately I had no opportunity of measuring a larch wood in the vicinity of Taymount, but it is well known to all foresters that, up to an age of 45 years, at any rate, larch produces a greater volume than Scotch pine, so that I may safely say:— "If grown in a well stocked or crowded wood and in localities of equal quality, Douglas fir is not likely to produce more solid wood during the first 30 or 40 years than the larch, and probably also not more than Scotch pine."

The explanation is, that, although the individual Douglas fir developes more rapidly in diameter and in height than a Scotch pine or larch, it requires, at any rate in Scotland, much more space; and consequently an acre of land will hold only a much smaller number of trees. Moreover, I shall further on show that it is more tapering than the important European conifers.

On the other hand, the growing stock of a Douglas fir wood consists of much larger trees (though smaller in number) than an equally old larch or Scotch pine wood, and this is a great advantage where big timber fetches higher prices than moderate-sized timber. This advantage will, however, to a considerable extent, disappear with advancing age, when our indigenous timber trees reach the size usually demanded in the market.

Although the Taymount plantation gives some valuable information respecting the early development of Douglas fir compared with that of Scotch pine, it leaves us as yet completely in the dark as to the further progress of production with advancing age. We have detailed and accurate information of the rate of increment of various European conifers, such as Scotch pine, spruce and silver fir, but our oldest pure plantation of Douglas fir consists of trees now only 32 years old. As regards the production per acre in its native home nothing reliable is available.

Hough, in his "Elements of Forestry," (1882,) tells us that the Douglas fir reaches in Oregon to the enormous size of 200—300 feet in height, and from 15—20 feet in diameter; he adds, however, that the tree is more commonly about 150 feet high and from 4—8 feet in diameter. In America the trees are said to stand near each other, but this they certainly do not in the Scotch plantations; on the contrary, here an acre can, owing to the spreading nature of the branches, accommodate only a small number of trees

compared with other species. On the whole, the matter requires considerable further investigation. This could best be done by a competent forester proceeding to North America and making suitable measurements on the spot. Such a step was actually taken, in 1885, by Dr. H. Mayr, a Bavarian forester and botanist. He visited the localities in which the Douglas fir thrives best, and he has promised to publish the information which he has gathered. So far, however, he has only favoured us with a few notes published in forest journals, and, as he has proceeded to Japan, as Professor of Forest Botany in the Japanese Forest School, his experience of the Douglas fir may not become available for years to come.

Pending further investigation, I may be permitted to gather together what useful information is available at present, and to draw such conclusions as may appear permissible. The following * information is at my disposal :—

(1). Measurements in the Taymount plantation.

(2). Height growth of two Douglas firs on the same estate, planted in 1834.

(3). Information supplied by Dr. H. Mayr.

(4). Examination of a section of a full-grown Douglas fir deposited in the Cooper's Hill Forest Museum.

(Ad. 1). The details of the measurements made in the Taymount plantation have been given above.

(Ad. 2). The Douglas firs, planted in the year 1834, were about four years old when planted, so that the trees were about 57 years old in 1887, when they showed a height of about 90 feet.

(Ad. 3). Dr. Mayr informs us in the "Allgemeine Forst und Jagd Zeitung" of February 1886, p. 61, that the Douglas fir reaches the highest degree of perfection in the moist valleys of the Cascade Range Mountains, which run parallel to the Pacific coast. He found that in those localities the average height of full-grown mature Douglas firs, grown on soil of the best quality, amounts to 213 feet, with a diameter of 6½ feet measured at 6½ feet above the ground. In the same locality, on gravelly soil, the trees only reached an average height of 148 feet, and a diameter of 2·6 feet. Again, in the Rocky Mountains, in Montana, at the same elevation and degree of latitude as on the west coast, the Douglas fir reaches, on the best soils only, the same dimensions as on the gravelly soil of the Cascade Range Mountains, that is to say, a height of 148 feet, and a diameter of about 2·6 feet. The latter dimensions are

* Much general information is, no doubt, available, but for the present object only actual measurements can be used.

not more than what our Silver fir will attain in localities of the first quality. The part of the Cascade Range, where the Douglas fir grows, has an annual rainfall of about 2·6 feet, while in Montana only 24 inches fall. Dr. Mayr believes that the development of the Douglas fir is proportionate to the rainfall, and to the degree of moisture in the air.

(Ad. 4). The cross-section in question was sent from America for exhibition in Europe; it was then made over to Kew, and by the kindness of the Director of Kew Gardens it was lately presented to the Cooper's Hill Forest Museum. The section shows a total diameter, including the bark, of 7 feet 9 inches, and the counting of the concentric rings indicates a total age of 515 years. A careful examination of the section has yielded the results exhibited in the subjoined Table:—

Age in Years.	Diameter, in inches.		Sectional area, in square feet.		
	Total.	Increment during every 25 years.	Total.	Increment during every 25 years.	Increment during every 100 years.
25	10·9	10·9	0·648	0·648	
50	14·3	3·4	1·115	0·467	
75	18·4	4·1	1·847	0·732	
100	23·0	4·6	2·885	1·038	2·885
125	26·1	3·1	3·715	0·380	
150	29·5	3·4	4·746	1·031	
175	33·0	3 5	5·940	1·194	
200	36·6	3 6	7·306	1·366	4·421
225	41·9	5·3	9·575	2·269	
250	47·1	5·2	12·100	2·525	
275	51·6	4·5	14·522	2·422	
300	56·6	5·0	17·473	2·951	10·167
325	60·7	4·1	20·096	2·623	
350	65·2	4·5	23·186	3·090	
375	69·6	4·4	26·421	3·235	
400	74·8	5·2	30·516	4·095	13·043
425	77·7	2·9	32·928	2·412	
450	81·5	3·8	36·228	3·300	
475	84·6	3·1	39·036	2·808	
500	87·4	2·8	41·663	2·627	11·147
515	89·5	...	43·689		
Including the bark,	93·0				

This Table exhibits some very remarkable facts. In the first

place, it shows that the tree was still making good increment at an age of 515 years, which is higher than that usually attained by the European larch, Scotch pine, spruce and Silver fir. Secondly, it shows, that the enormously rapid increase of the diameter during the first 25 years is suddenly followed by a much smaller and an approximately even increment during each of the following nineteen periods of 25 years. I have represented the progress of the diameter increment graphically in the appended drawing, which will give a clear idea of it :—

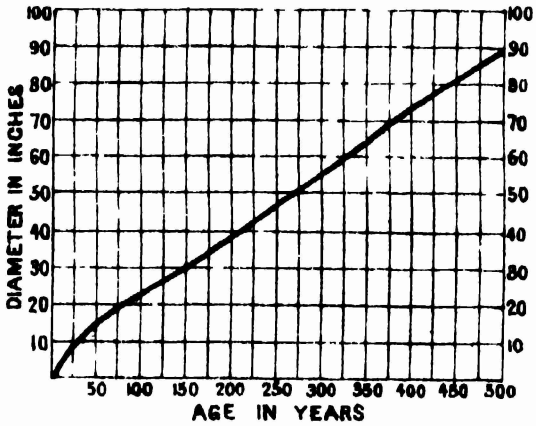

Diagram showing the increase in diameter of the trunk of the Douglas fir, according to age.

Thirdly, the sectional area increases, on the whole, steadily. The periodic increment increases up to the age of 400 years, when it commences to fall. Taken by centuries, we find that the fourth century yielded the largest increment. The appended graphic representation will make this clear :—

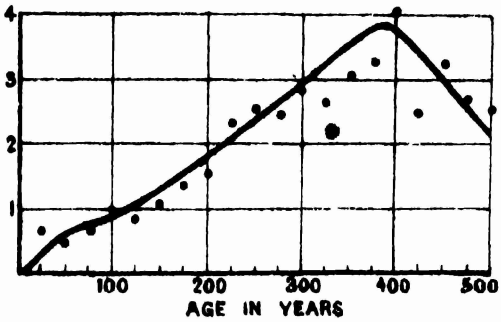

Diagram showing the periodic increment of every 25 years in square feet.

Fourthly, the rate of growth indicated in the section up to the year 30 resembles that of the average tree in the Taymount plantation in a striking degree, as the following figures will show :—

	Inches.
Diameter of average tree at Taymount at 4 feet 6 inches above the ground, ...	12
Diameter of 30 years' growth on the section from America,...	11·9

Assuming, then, that the average tree in the Taymount plantation will show a future development similar to that shown on the above-mentioned cross-section, I have endeavoured to forecast the volume of solid wood, or growing stocks (3 inches and upwards in diameter), which an acre of land belonging to the first quality is likely to contain at various periods.

In order to facilitate my task I shall commence by giving such data for the Silver fir, obtained by careful and extensive measurements on the Continent. The volume, or cubic contents of a standing tree, is best calculated by the following formula :—

$$s \times h \times f.$$

Here s represents the sectional area taken at a convenient height above the ground, usually the height of the chest of a man, or about 4½ feet ; h indicates the height or length of bole ; and f indicates a certain coefficient called "the form figure." The product of $s \times h$ represents a cylinder with a base equal to that of the tree at 4 feet 6 inches from the ground, and a length equal to the height of the tree, the volume of which is considerably larger than that of the tree, as the latter tapers from the base upwards ; hence f is a fraction of 1, and as the product, $s \times h$, is thus reduced by multiplying it with f, the latter is sometimes called the reducing factor.

(*To be continued*).

RATE OF GROWTH OF SCOTCH PINE IN GERMANY.

THE accompanying Tables may interest Indian foresters. The first gives the results in English measure of the Yield Table for the Scotch pine (*P. sylvestris*) compiled in 1880, by W. Weise, on behalf of the German experimental stations. In the column "quantity of wood" the figures include small stuff as well as timber. Similar tables have been compiled for the spruce, silver fir and beech.

The second Table has been compiled from the first, and shows the age at which the average tree attains a given diameter, and the mean height, number of trees and quantity of timber per acre which correspond to the age so obtained.

P. J. C.

Age.	Mean diameter in inches. Quality.					Mean height in feet. Quality.					Number of trees per acre. Quality.					Quantity of timber in cubic feet per acre. Quality.				
	I.	II.	III	IV.	V.	I.	II.	III.	IV.	V.	I.	II.	III.	IV.	V.	I.	II.	III.	IV.	IV.
5						2·6										343				
10						7·2	5·9	4·9	4·3	3·6						972	629	515	386	243
15						15·1	12·1	9·8	8·2	6·9						1,629	1,028	886	714	529
20						23·9	18·7	15 4	12·8	10·8						2.315	1,529	1,286	1,058	815
25	3·78					31·5	24·6	20 7	17·7	15·1	1,600					3,001	2,158	1,715	1,400	1,100
30	4·68	3·39	2·75			38·1	30·5	25·6	22·3	19·0	1,188	1,895	2,534			3,644	2,758	2,144	1,744	1,386
35	5·55	4·17	3·54			44·6	35·8	30·2	26·6	22·3	918	1,396	1,662			4.244	3,330	2,543	2,072	1,658
40	6·38	5·04	4·29	3·30	2·91	51·5	41·0	34·8	30·5	25·3	735	1,034	1,236	1,582	1,835	4,802	3,859	2,901	2,372	1,901
45	7·17	5·83	5·04	3·90	3·35	57·7	46·2	39·0	33·8	28·2	607	823	937	1,258	1,540	5,315	4,330	3,230	2,658	2,115
50	7·91	6·61	5·75	4·45	3·74	63·7	51·2	43·0	36·7	30·8	513	666	753	1,060	1,339	5,817	4,745	3,530	2,916	2.315
55	8·66	7·40	6·46	5·00	4·13	68·2	55·4	46·9	39·7	33·1	440	548	614	899	1,162	6,288	5,102	3,801	3,144	2,500
60	9·40	8·15	7·13	5·55	4·45	72·5	59·7	50·5	42·3	35·1	381	460	516	765	1,052	6,746	5,417	4,059	3,359	2,673
65	10·08	8·90	7·76	6·10	4·72	76·4	63·6	53·8	44·9	37·1	328	394	444	656	962	7,146	5,702	4,301	3,558	2,827
70	10·71	9·65	8·31	6·65	5·00	79·7	67·2	57·1	47·6	39·0	303	340	392	562	878	7,503	5,960	4,530	3,730	2,973
75	11·34	10·35	8·86	7·24	5·28	82·7	70·5	60·0	49·9	41·0	273	297	350	482	806	7.832	6,188	4,744	3,872	3,087
80	11·97	11·02	9·37	7·72	5·55	85·3	73·2	62·7	52·2	42·6	247	264	317	429	740	8,132	6,403	4,945	3,987	3.187
85	12·60	11·61	9·84	8·11	5·75	87·9	75·8	65·0	54·1	44·0	223	238	288	388	698	8,403	6,602	5,130	4,087	3,258
90	13·22	12·16	10 28	8·35	5·90	90·2	78·4	66·9	55·8	45·0	204	218	266	367	663	8,661	6,789	5,302	4,173	3,301
95	13·86	12·72	10·71			92·2	80·7	68·9			186	201	247			8,890	6,945	5,444		
100	14.41	13·23	11·10			93·5	82 7	70·5			172	186	229			9,104	7,089	5,574		
105	14·96	13·74	11.50			94·8	84.6	71·8			160	173	214			9,304	7,232	5,702		
110	15.43	14·25	11·77			96·1	86·2	73·2			150	160	204			9,490	7,375	5,817		
115	15·67	14·68	12·09			97·4	87·6	74·5			145	151	194			9,646	7,503	5,916		
120	15·87	15·08	12·28			98·4	88·6	75·5			142	143	188			9,776	7,632	6,003		

Mean diameter, inches.	Mean height in feet. Quality.					Age in years. Quality.					Number of trees per acre. Quality.					Quantity of timber in cubic feet per acre. Quality.				
	I.	II.	III.	IV.	V.	I.	II.	III.	IV.	V.	I.	II.	III.	IV.	V.	I.	II.	III.	IV.	V.
4	33	35	35	34	33	26	34	38	46	54	1,518	1,495	1,407	1,218	1,195	3,130	3,214	2,759	2,710	2,463
5	41	41	39	40	39	32	40	45	55	70	1,080	1,034	937	899	878	3,884	3,859	3,230	3,144	2,973
6	49	47	45	44		38	46	52	64		807	811	697	677		4,580	4,413	3,638	3,519	
7	56	53	50	49		44	52	59	73		635	620	534	514		5,214	4,889	4,009	3,814	
8	65	59	55	54		51	59	67	84		498	480	424	397		5,911	5,354	4,393	4,067	
9	70	64	60			57	66	76			416	383	336			6,472	5,754	4,784		
10	76	69	65			64	73	87			345	313	280			7,066	6,098	5,198		
11	81	73	70			72	80	99			291	264	231			7,635	6,403	5,548		
12	85	77	74			80	88	115			247	226	194			8,132	6,713	5,916		
13	89	82				88	98				211	192				8,560	7,003			
14	92	85				96	108				183	154				8,933	7,319			
15	95	89				105	120				160	143				9,304	7,632			

II. Review.

ANNUAL REPORT OF THE DIVISION OF FORESTRY IN THE UNITED STATES FOR 1887.

This is the second Annual Progress Report for the whole of the States, and like the first is written by that indefatigable pioneer in forest matters, Mr. B. E. Fernow, Chief of the Forestry Division of the Department of Agriculture.

The Report describes briefly the work which the Division undertook or accomplished during the year, and outlines the plan of work which it is desirable to pursue in future. It also contains a short, but very interesting account of the conditions prevailing in regard to forest matters in the several States and Territories of the Union.

The work of the Forestry Division is principally to act as an office of enquiry and advice. Hitherto the information it has collected has consisted in a recital of the methods of forest administration which prevail in Europe, and in a presentation of the needs of the country as full and as accurate as the necessarily imperfect knowledge of its forest conditions has permitted. Imperfect as this knowledge is, it is sufficient to show how wantonly the forest wealth of the country has been, and is being, squandered, and how urgent the necessity of some sort of concerted and energetic action on the part of the Government is.

The enormous areas reported to be under wood in the several States, as detailed in the following Statement, are calculated to deceive the outsider, but Mr. Fernow assures his Government, in very emphatic and unmistakable language, that the reduction of the forest resources is taking place with headlong rapidity, and that "devastation and deterioration in quality of the remaining or the new crop go hand in hand with the decrease of serviceable material."

State.		Acreage under forest.	Percentage of total area of State.	Percentage of wooded area in farm.
Maine, ...	...	12,000,000	62·7	22·4
New Hampshire,	...	3,000,000	52	13·2

State.		Acreage under forest.	Percentage of total area of State.	Percentage of wooded area in farm.
Massachusetts,	...	1,389,500	27·8	entire area.
Rhode Island,	...	163,528	24·2	" "
Connecticut,	...	650,000	21	99
Vermont,	...	1,990,000	32·5	79·1
New York,	...	8,000,000	26·2	64·9
New Jersey,	...	2,330,000	48·8	30·4
Delaware,	...	300,000	23·9	?
Maryland,	...	2,000,000	31	81
Virginia,	...	13,000,000	50·6	70·2
North Carolina,	...	18,000,000	57·9	77
South Carolina,	...	13,000,000	67·3	55·8
Georgia,	...	18,000,000	47·7	84·8
Florida,	...	20,000,000	57	?
Alabama,	...	17,000,000	53·1	59·6
Mississippi,	...	13,000,000	44	?
Louisiana,	...	13,000,000	44·6	35·1
Texas, ...	...	40,000,000	23·2	?
Michigan,	...	14,000,000	38·1	31·8
Wisconsin,	...	17,000,000	48·8	28
Minnesota,	...	30,000,000	59·3	6·8
Ohio, ..	...	4,258,767	16·69	98·6
Indiana,	...	4,300,606	19	97·3
Illinois,	...	3,500,000	9·8	entire area.
West Virginia,	...	9,000,000	57	?
Kentucky,	...	12,800,000	50	78·2
Tennessee,	...	16,000,000	60·2	70·2
Arkansas,	...	28,000,000	81·2	28
Iowa,	...	2,300,000	12·7	entire area.
Dakota,	...	3,000,000	3·2	2·7
Nebraska,	...	1,500,000	3·1	21·4
Kansas,	...	3,500,000	6·7	28·3
Montana,	...	25,000,000	26·9	?
Wyoming,	...	7,800,000	12·5	?
Colorado,	...	10,630,000	16	?
New Mexico,	...	8,000,000	10·2	3
Idaho,	...	10,234,000	18·5	?
Nevada,	...	2,000,000	2·8	?
Utah,	...	4,000,000	7·6	?
Arizona,	...	10,000,000	13·8	?
Washington Territory,		20,000,000	44·3	2·19
Oregon,	...	20,000,000	33	7·12
California,	...	20,000,000	20	8·3

From the preceding table we see what a vast and varied area (3,062,990 square miles) the Forestry Division has to watch over, and yet it is limited to a total expenditure of about £2,000, out of which to pay for experiments, investigations, reports, and the collection and distribution of valuable economic forest seeds and plants! It is to be hoped that the Government will, before it is too late, appreciate the urgency of the forest question, and subsidise its Forest Department in a measure commensurate with the extent and tremendous importance of its work.

Mr. Fernow has given in his Report information regarding fifteen of the principal indigenous timber trees of the States. This information is grouped under the following heads :—Distribution, growth, soil and locality, mode of propagation, quality of wood and economic uses, and descriptive characters.

Thirty-six out of the 147 imperial octavo pages composing the Report are devoted to suggestions for a systematic enquiry into the forest resources and conditions of the country with a view to compiling a complete body of statistics and working out the best system of protecting, administering, organising, treating and utilising its forests. The syllabus of this enquiry includes all the subjects which form the subject of teaching in a Forest School, and the mode of enquiry recommended is based on the actual practice of Forest officers in Europe in charge of Statistical bureaux and experimental stations. The results of experiments made in Germany are brought together and recorded in these pages. These very interesting facts would, it may be thought, find their proper place in a year-book of Forest Science in general rather than in an annual report of progress in forest administration in the United States. But as in the present condition of forest affairs in the States, the Forestry Division occupies to a great extent the position of a pleader before the Government for greater activity in the preservation and improvement of their forests, every fact bearing on forest conservancy requires to be placed before it in order to win its acquiescence.

Fire seems to be, as with us, the worst source of injury after reckless clearing and felling. In New Hampshire and also in New Jersey the annual loss caused by fire to actual standing stock alone is estimated at £250,000, an amount that is almost equal to the entire taxation of these States. In 1880 the pecuniary loss suffered from forest fires was estimated at over £1,000,000. The Legislature of nearly every State has taken up energetically the question of protecting the forests against fires, but although in some States a certain measure of success has been achieved, the want of a re-

gular organised Forest Department has hitherto rendered the law against fires more or less nugatory. By way of specimen, we transcribe below in full the laws against forest fires in Massachusetts. Our readers will not fail to observe the marked spirit of self-government which characterises these enactments, so different from that pervading the forest enactments of the older world.

"AN ACT for the protection of forests against fires.

"SECTION 1. Whoever wantonly and recklessly sets fire to any material which causes the destruction or injury of any growing or standing wood of another shall be punished by fine not exceeding one hundred dollars or by imprisonment in jail not exceeding six months. (Chap. 163 1882.)

"AN ACT for the better protection of forests from fires.

"SECTION 1. Whoever wifully or without reasonable care sets a fire up on the land of another by means whereof the property of another is injured, or negligently or wilfully suffers any fire upon his own land to extend beyond the limits thereof by means whereof the wood or property of any other person are injured, shall be punished by fine not exceeding two hundred and fifty dollars.

"SECTION 2. In all towns it shall be the duty of the selectmen to appoint within thirty days after the passage of this Act, and thereafter annually, in March or April, one or more persons, to be called firewards, who shall, in respect to fires in woodland, have and exercise the powers and duties prescribed for firewards in Chapter thirty-five of the public statutes. In towns of less than three hundred voters the selectmen may serve as forest firewards if the towns shall so elect.

"SECTION 3. It shall be the duty of forest firewards to post copies of this Act and Chapter one hundred and sixty-three of the Acts of the year eighteen hundred and eighty-two in two or more public places, to investigate all cases of fires in woodlands and report thereon to the mayor of the city or to the selectmen of the town, who in their discretion shall cause complaints to be made for violation of the provisions hereof.

"SECTION 4. The mayor and aldermen and selectmen shall make return to the insurance commissioner, as required in Chapter thirty-five, section ten, public statutes, of all forest fires in their respective cities and towns in which more than one acre is burned over.

"SECTION 5. The engineers of fire departments in cities where a fire department exists shall have and exercise the powers and duties herein prescribed for forest firewards.

"SECTION 6. Forest firewards may employ such assistance at the expense of the city or town as they see fit to suppress forest fires, and shall receive such compensation as the city or town may determine. (Approved June 16, 1886, Chap. 296.)"

In most States the Railway Companies are required to keep their lines clear of inflammable material, and to provide their locomotives with spark arresters.

The replies to the questions regarding the effect of the removal of the forest upon springs, streams and ponds tell, with scarcely a single exception, the same story. The water supply is year by year failing, and the smaller springs and streams which had never until recently been known to fail, often become totally dry in a dry season. The deposit from the overflow of streams has changed in character ; it is now more sandy, showing that it is the wash, not from the rich mould of the forest, but the scourings of bare hill-sides, scarred by ravines cut deeper at every freshet for want of the protecting forest.

Even with respect to the influence of the clearing of forests on the climate there is only one answer, and that is that extremes are becoming more pronounced in consequence of it.

The tapping of pine for turpentine (turpentine orcharding as it is called) is carried out without any regard to the safety of the trees, which are thus rendered useless, if they are not killed outright.

In most of the States that peculiar institution, the Arbor Day, has been established by act of the legislature. By this, as all our readers are aware, one day in the year is set apart to be observed by the people at large in "planting of trees, shrubs and vines, in the promotion of forest growth and culture, in the adornment of public and private grounds, places and ways, and in such other efforts and undertakings as shall be in harmony with the general character of a day so established." In many of the States the formation of new woods and forests of certain species is encouraged by exempting the planter from taxation for a period of usually 20 years after the young growth has reached a fixed height, *i.e.*, has become established.

The extent to which the forests are worked is astounding. In Michigan the aggregate value of white pine (*Pinus Strōbus*) timber exported from the forests during the past 25 years approximated £174,000,000, or at the average rate of £7,000,000 a year. In the same State there were during 1884 3,855 wood-using factories, representing a capital of £16,000,000, and employing 74,869 persons, who received a total of £5,400,000 in wages. Besides supplying the enormous wants of a large and rapidly increasing population, the States export, chiefly to Europe, a very large quantity of timber. The following Table gives the quantity of timber exported by the several countries named. The figures represent million cubic feet :—

Countries.	1885.	1886.	1887.
Canada (official), ..	160	173	168
Russia (imperfect), ..	149	146	150
United States (official),	127	122	114
Sweden, ..	120	114	122
Norway, ..	68	65	65
Germany (official), ..	63	54	63
Finland, ..	46	39	42

We confess that we rise from a perusal of Mr. Fernow's excellent Report in no cheerful mood. On the one hand, it is true, we have enthusiastic and able men, like Mr. Fernow, preaching the new gospel of self-denial and providence in the utilisation of the vast forest resources which a bountiful Nature has placed at the disposal of the present generation of their countrymen; but on the other hand, there is still the same reckless waste going on, which was no doubt permissible, and at any rate inevitable, when the country was being first settled, but is simply suicidal at the present day. In the midst of all this discouragement, the most hopeful sign of the times is the establishment of forestry classes at most of the Colleges and Universities. The Professors of forestry are mostly men of high scientific attainments, many of them being eminent savants, and their classes are well attended. Their teaching must eventually filter down amongst and leaven the mass of the people, and the time may soon arrive when the forest question will be taken up enthusiastically by the principal citizens in every State.

THE BRANDIS PRIZE.—We would remind intending competitors that their essays must reach the Director of the Forest School, Dehra Dún, N.-W. Provinces, before the end of March.

GOVERNOR OF BENGAL * FORWARDED BY ORDER OF

THE

INDIAN FORESTER.

Vol. XV.] March, 1889. [No. 3.

A NEW VIEW OF JARDINAGE.

(Continued from the February Number.)

BENGAL SECRETARIAT

In accordance with the promise made in our last paragraph on this subject in the preceding Number, we now proceed to offer our own comments on the view of jardinage taken by M. Gurnaud and on his practice of the system.

We are very glad indeed to find that a champion has at last arisen to clear this system of much of the odium which has always attached to it in France. The discredit into which it has fallen is due in a great measure to the teaching of the Nancy Forest School. Parade returned from Germany, at the beginning of the second decade of this century, full of the new gospel preached by the great Hartig, whose pupil he had been. With the enthusiasm characteristic of all young men, he wrote an apotheosis of the *Méthode naturelle* in his celebrated work "La culture des bois," which after nearly half a century still remains, without any important alterations, the text-book at Nancy. Nanquette, Bagneris and Broilliard, all three pupils of Parade, continued to teach the unrivalled excellence of the method by disparaging every other, inclusive of jardinage. Thus Bagneris in his "*Manuel de Sylviculture*" says, "Jardinage consists in felling here and there, wherever they chance to be found, trees that are *dead*, *decaying*, *unsound* or *past maturity*, and a few others that are still healthy to meet the demands of the market." Again Broilliard in his "*Cours d'aménagement*"* says, that the method is "simply the exploitations of *primitive humanity* generalised into a system," and

* See Fernandez' translation entitled "Principles of Forest Organisation," pages 170 and 171.

lower down he adds that it "consists in the removal here and there of the oldest trees, of those *dying*, *decaying* or *dead*, and of others still in full growth, but which are required to satisfy the wants of the proprietor." The italics are in every case ours. Both these writers prejudice the system at the very outset by declaring that its essential characteristic is to make the forest yield unsound wood, sound timber being cut only to satisfy the market or the wants of the proprietor. This is surely a most unfair way of putting things. Why, if we take any class of fellings in their own favourite *Méthode naturelle*, a forester marking a coupe must necessarily first of all mark for felling the *dead*, *dying* and *decaying* trees, and only after these, in order to make up the balance of the fixed yield, the sound, healthy, growing trees whose removal is required in the interests of the surviving neighbours or of the regeneration. So that the charge of throwing into the market in the first place unsound produce is just as true of the one system as of the other. And indeed it is the very essence of good forestry everywhere to utilize without delay all trees which in the very best managed forests die, enter on their decline or deteriorate in more or less large numbers, according to the soil and the locality, within the period from one felling to the next. If the charge made against jardinage of yielding unsound wood were confined to pointing out that more or less heavy damage, caused by the frequent felling in one and the same place of large trees, was inseparable from it, the detractors of the system would have occupied a safe position, for however carefully the felling, conversion and export operations may be carried out, the most uncompromising advocate of jardinage must admit that the damage done is greater than in any other system of exploitation.

This charge M. Gurnaud does not, as far as we know, attempt to meet. The extent of damage can of course be very considerably reduced by adopting a long rotation of coupes; but if this period is raised beyond a certain comparatively low limit, the exploitation of the coupes ceases to be a jardinage at all. It becomes an intensive system of felling, whereas jardinage is essentially an extensive system in the sense that in it only a little must be taken out of the forest at any one point. Thus intensified jardinage would become what has been described as the Group Method in Fernandez' "Rough Draft of a Manual of Indian Sylviculture." * There is, however, no reason why the length of

* The *Gruppen- und horstweise Schirmbesamung* of Karl Gayer.

rotation of the coupes should not be brought in each case as nearly up to the maximum limit as prevailing circumstances will allow, so as to minimise the destructive effects of the jardinage fellings.

But besides the defect just pointed out, there are also three other very serious ones which jardinage, even of the most intensified kind, can never divest itself of, except in forests of very limited extent. These defects are—

(i). Difficulty of protection owing to the necessarily large areas to be looked after.

(ii). For the same reason, expensive working and export, resulting in reduced net prices and possible diminished utilisation of the cheaper classes of produce. In some cases, small stuff, such as faggot wood, and inferior species may become altogether unsaleable. Thus we have not only loss of revenue, but also of production, for to obtain the maximum production the entire accumulation of the annual increments up to date must be taken out of every complete crop each time a felling is made. As a result of inferior produce remaining unutilised, dead and decaying wood ultimately encumbers the ground everywhere, to increase the destructiveness of forest fires and propagate injurious insects and fungi.

(iii). Impossibility of admitting cattle anywhere, since the entire area is constantly under regeneration—a really capital defect in most of our Indian forests, where the question of pasturage is, as a rule, inseparably connected with that of sylviculture.

Then again, owing to the very limited amount of felling allowed at any one point, the regeneration is more or less unregulated, the removal of trees being perforce restricted mainly to opening out the leaf-canopy over advance growth. Such being the case, those species are bound to predominate in the new crop, which seed and germinate most freely and survive best under the kind cover peculiar to a forest worked by jardinage ; so that this system may be totally unsuited to a forest, of which the valuable species are difficult to regenerate, especially if of the rest those which come up most freely are worthless from the point of view of the market.

At the same time we must admit the very great advantages secured by the adoption of jardinage—(i), constant maintenance of the leaf-canopy in as full a condition as we like and the prevailing species, soil, locality and climate will allow ; (ii), constant maintenance or improvement of the fertility of the soil ; (iii),

keeping down, as much as possible, of low invasive herbaceous and shrubby growth ; (iv), certainty of regeneration with some species or other ; (v), almost unlimited elasticity in the working of a forest, the exploitations being capable of being made to respond at once, within the capability of the forest, to the most widely fluctuating demand both as regards quantity and class of produce ; and (vi), the comparatively little skill and experience required in applying the system (regarding this point we shall have more to say lower down).

Having said so much, in order to clear the ground for further remarks, we will now proceed to discuss the more important points raised by M. Gurnaud.

First of all we must confess that we cannot help sympathising with that courageous officer in his revolt against the tyranny with which the *Méthode naturelle* has been enforced everywhere in France, whencesoever it has been possible to drive out every other system. The *Méthode naturelle* is at this day what it was more than half a century ago, when Parade first preached it in the country, although it has elsewhere undergone modifications in various directions in order to adapt it more closely to actual conditions. Its unchangeability it owes mainly to two causes—the prodigiously favourable climate of France for forest culture, and the unhappy misnomer which makes it accepted by every French forester without question, from the time he begins to imbibe the first rudiments of his profession, as *the* natural method. Those of our colleagues hailing from Nancy, whose lot it has been, on first arriving in this country, to serve outside the temperate forests of the Himalayas, must have found themselves sorely puzzled how to apply the method in their charges. The real fact is that the method in question is not the *natural* method at all, but the *normal* method. Its application postulates the actual or possible existence of a *normal* forest, that is to say, of a forest that consists of conveniently distributed crops forming a complete series, the individual members of which, covering more or less equal areas, or areas of more or less equal productive power, represent respectively every successive stage of growth from the nascent seedling to the fully exploitable tree. Whereas, for a given forest, that method would be the natural one, which was most nearly adapted to prevailing conditions of growth, so that there can never be one immutable natural method for the whole world or even the whole of a country or district.

In his revolt against the classic method of his country, M. Gurnaud, it seems to us, goes to the opposite extreme and abolishes entirely the idea of the crop as the individual to be treated, and

replaces it by that of the individual tree. This is obviously a mistake, but it is possible that in actual practice, in applying his method, the crop as an individual occupies a due share of his attention.

Leaving out side issues, M. Gurnaud's quarrel is really with the way in which jardinage is understood and carried out in France. He correctly says that cleanings, thinnings and other fostering operations are not entirely excluded from the method.. But, if we understand him aright, he lays too much stress on this fact, and would make it appear that these operations have the same meaning and extended character as in those systems in which the regeneration is concentrated at a time within limited, easily manageable areas. It is however easy to show that in the case of cleanings and thinnings at any rate he is wrong. In the first place, as it is the essence of the jardinage method to have all the various ages mixed up, whenever a jardinage felling was undertaken, many promising saplings and poles of valuable species would be found requiring to be saved from overtopping inferior growth, and at many points the forest would be so crowded as to require being thinned ; so that the jardinage felling itself would necessarily include a certain amount of cleaning and thinning. But it is evident that such cleaning and thinning must be of a very restricted character, and would be really only very highly modified cleanings and thinnings. To be true cleanings and thinnings the area in which they are required would have to be appreciably large, and we should then have a case not of jardinage but of the group method. In the next place, cleanings and thinnings cannot be made separately, but must necessarily be combined into one and the same operation, since whenever any portion will require being cleaned, another in immediate proximity will require being thinned ; and not only this, but both operations may often become urgent in one and the same place, owing to the presence of more than one distinct tier of growth. In the third place, if the combined cleaning and thinning is to be repeated, once or oftener, as an entirely separate operation subsequent to the jardinage felling, either the periodicity of this felling must be lengthened to such an extent as to require heavy removals of produce inconsistent with the spirit of jardinage, or the cleaning-thinning (if we may be allowed to coin such a word) should be given an entirely different rotation of coupes from that of the jardinage fellings, the number of the coupes in the former being considerably larger.

All through the papers which we have translated runs the spirit of revolt, not only against the *Méthode naturelle*, but against jardin-

age itself as it has been hitherto understood. Indeed, we strongly suspect that M. Gurnaud has, without being aware of it, just got upon the borderland of the group method, which stands midway between the so-called natural method and jardinage, and is the true natural method.* If this is so, then we readily concede to him the possibility of making, in his method, real cleanings and thinnings as operations quite distinct from, and subsequent to, the fellings effected in connection with regeneration. That our suspicion is correct is also supported by the statement, the responsibility for which has been accepted by M. Gurnaud, that "thus understood, jardinage really becomes a most intensive method of treatment." The most ardent advocate of jardinage could not call it an *intensive* system of treatment. Again, it is said of M. Gurnaud's method that it "requires on the part of the forester great sagacity, close attention and a perfect grasp of the details of present as well as of past work. * * * The delicate nature of the individual operations increases in the same proportion as the intensity of the culture." Now it is an acknowledged fact that in real jardinage the selection of the trees to be felled is far easier than in any other system of high forest culture.

Assuming that our conjecture is right, M. Gurnaud's system just stops short of the group method. This latter has been attained by working down from the *méthode naturelle*, from the treatment of the hypothetical normal forest to the actual forests of this sublunary sphere. M. Gurnaud's system has, on the other hand, been worked up from the jardinage method, and hence still retains the two main elements of this method, *viz.*, exploitation by individual trees and the constant maintenance of an upper stage of large trees above a lower stage or the underwood, the most promising individuals of which are alone allowed to grow up into the upper stage. If we seek precision, we must cease calling M. Gurnaud's system jardinage, which it is not. But however we designate it, it is a distinct step of progress, and will, we are sure, serve as the basis for the treatment of a great many of our forests, which are not yet, or never will be, sufficiently favourably placed for the application of a more intensive system of culture. In some of these forests M. Gurnaud's method may be introduced at once, while in others, which are actually under the *régime* of jardinage, an approach to that method may be adopt-

* For those who have only studied French forestry, we may define the group method as that which insists on treating every portion of a forest on its own merits. The only work in English, in which this method is described, is Fernandez' "Rough Draft of a Manual of Indian Sylviculture."

ed with advantage as the opportunity presents itself. Even in the various systems of improvement fellings which we are now prescribing everywhere on a large scale, M. Gurnaud's method may be kept in view with profit, as it will serve, in most cases, to direct those fellings on the proper lines. We Indian foresters owe M. Gurnaud a heavy debt of gratitude for having supplied us with a ready-made system of forest culture, which will be the key to the solution of many a hard problem that has puzzled most of us for years past. For many of us it gives a definite form to ideas that have occurred to us often enough, but have never attained that precision which alone can give them any practical value.

We may go further into this subject in a future article. In the meanwhile we earnestly invite remarks from our colleagues working in various parts of the Empire.

INDIAN DATE-PALMS.

PENDING the completion of the last volume of the 'Flora of British India,' it may interest our readers to have the list of the indigenous species of palm of the genus *Phœnix* which have been admitted as distinct by Prof. Beccari of Florence, to whom the work of the descriptions of the Indian Palms has been entrusted by Sir J. Hooker.

1. *Phœnix acaulis*, Roxb.—The small species with round bulbous-like root-stock, found in the lower hills of the North-West Himalaya, and the plains country adjoining.

2. *P. humilis*, Royle.—The common small species found throughout the Central Provinces, Northern Bengal, Chota Nagpur, the Circars and Deccan, down to the Nilgiris. It has three principal varieties—

1, *Ousleyana*—Deccan ;

2, *pedunculata*—Nilgiris ;

3, *robusta*—the large one of Parasnáth and the Circar Hills. This species usually has a quite distinct stem when tolerably old.

3. *P. zeylanica*, Trimen.—The same as Gaertner's *P. pusilla* and Linnæus' *Elate sylvestris*, Ceylon.

4. *P. farinifera*, Roxb.—A whitish scurfy-leaved species of the coasts of the Carnatic, common about Madras.

5. *P. rupicola*, T. And.—The large handsome species of the outer Darjeeling Hills.

6. *P. paludosa*, Roxb.—The Sundarbans.

The 7th species, *P. sylvestris*, of which the edible date *P. dactylifera* is considered as a variety, is only admitted as an introduction.

4th February, 1889. J. S. G.

BAMBOOS FOR FISHING RODS.

In continuation of my letter which appeared in your Number for September of last year, I send you a letter received by a friend of mine from Messrs. Hardy Bros. on the subject of "Calcutta canes" (bamboos) for the manufacture of split-cane fishing rods.

I should be much obliged if any of your readers could enlighten me as to the species of the cane referred to, and the locality from which it is obtainable.

Dehra Dun,
21st January, 1889.

Fred. Bailey.

"The canes (mottled bamboos) we use, we of course import from Calcutta. They are bought for us and shipped to Liverpool. Do you know if there is such a name as "mytols"? And if these mottled bamboos are called by this name in any district? Or if there is a district of that name from which they come? We have had the raw cane before burning—have had them oiled and seasoned or half burned in hot sand to order, and after all we are of opinion that this burning toughens, or rather stiffens and hardens the canes very much, and this stiff springiness, combined with toughness, is what is most required. We use both male and female bamboos, the males almost solid, but we prefer the thinner or female, as on cutting up these male canes they are generally soft, having so much pith. For our purpose we find them inferior to females. You will notice great thickness is not of much consequence, as we would rather double build, as see woodcut on this paper.* The great danger in burning the canes is they are generally too much burned. In no place should the burning be into the fibre, as of course that spoils the cane. At the same time, as before said, we believe the burning to be important.

"If you can in any way put us in the way of getting good bright and not over-burned canes we will be very much obliged to you."

27th June, 1888.

FORESTRY IN HUNGARY.

(*Continued from page* 67).

CHAPTER II.

A TOUR IN THE CARPATHIAN FORESTS.

General Description.

We reached Buda-Pesth on the 29th June, 1886, and next morning proceeded to the office of the Director-General of Forests, where we were received with great kindness, and the final arrangements for our tour were made; a detailed programme, showing

* See woodcuts in our issue for September 1888.—[Ed.]

where we were to go, and what we were to see each day was drawn out and circulated to the forest officers concerned. Next day, we were received by Baron Gabor Kemeny, Minister of Communications; and the Acting Director-General of Forests, M. Rouai, very kindly offered to allow M. Albert de Lavotta, an assistant Inspector, to accompany us on our tour, in order to arrange our journey and act as Hungarian interpreter.

Accompanied by this accomplished forester and linguist, as well as charming companion, we left Buda-Pesth on the evening of the 2nd July, and travelled by Miskolcz, Sátorallya-Ujheli, and Kiraly-háza, to Mármaros-Sziget, which lies at the foot of the Carpathian range, in the north-eastern part of the kingdom. Between Miskolcz and Sátorallya-Ujheli, we passed through the celebrated Tokay wine country; and then crossed a vast plain with very poor soil, on which *Robinia Pseudo-acacia* is now being successfully cultivated. In the neighbourhood of Kiraly-háza, we twice crossed the Tisza, on which we saw many rafts slowly making their way down to the Danube.

We were about to visit four Conservatorships, *viz.*:—Mármaros-Sziget, at the head of the Tisza; Bustyaháza, on the Taracz; Lipto-Ujvár, on the northern slopes of the Alacaony range of hills, which runs parallel to, and to the south of, the general line of the Carpathians; and Beszterczebánya, which lies round the head waters of the Garam river. The conditions in the four districts are sufficiently alike to make it possible to give one general description of them all.

The total area is 1,635 square miles, of which 1,329 square miles are actually under forest, and the remainder consists of fields, meadows, and unproductive ground. Of the former area, 1,203 square miles are situated above the elevation of 2,000 feet. The main crop is composed as follows, *viz.*:—oak 34 square miles, beech and other broad-leaved species 412 square miles, conifers 883 square miles. The whole of this area, with the exception of 95 square miles of Forests of Protection managed on the selection system, are maintained as high forest, with a revolution of from 80 to 120 years. The average annual revenue, expenditure, and surplus, during the four years from 1881 to 1884 were—

Revenue, ...	£191,157
Expenditure, ...	129,484
Surplus, ...	£61,673=1*s.* 2*d.* per acre.

The four Conservatorships are formed by the aggregation of 40 divisions averaging 41 square miles, and sub-divided into 196

guard's beats averaging 8 square miles. There are 144 officers of the superior staff, and 318 subordinates; and the total annual cost of this establishment is £24,435, or 5½*d.* per acre of the entire area.

Provisional working plans have been framed for the whole of the forests. The area annually felled over is 6,677 acres; 6,805 acres were replanted in 1884, and in the same year 422 acres were regenerated naturally by successive fellings. The annual yield is somewhat over 16½ million cubic feet of timber, nearly 14¼ million cubic feet of firewood and charcoal, and 3,100 tons of tanning bark.

With a view to avoid the flooding of the local markets by the sale of excessive quantities of State timber, and thus lowering prices to the injury of private interests, it has been arranged to export at least one-half of the timber from the Mármaros-Sziget Conservatorship beyond the Hungarian frontier. Most of this wood, as well as of that coming from Bustyaháza down the Tisza and Taracz rivers, is floated by way of Szolnok and Szeged, where a good deal of it is sold, to the Danube at Belgrade, and thence to Orsova for sale to merchants from the Balkan provinces. But a part of the timber goes by rail to Austria and Germany, and a part to France and Italy by way of Fiume. From Lipto-Ujvár, the main line of export is by raft down the Vág to the Danube, and thence to Buda-Pesth and Orsova. From Beszterczebánya, the route is down the Garam to the same destination.

At Lipto-Ujvár there is a large tanning factory, which takes annually nearly 25,000 tons of bark, principally of spruce. About one-half of this quantity is re-sold raw, while the other half is boiled down and yields 3,000 tons of extract, which is exported to other European countries and also to America and Australia.

The prices realized in 1884 per cubic foot of wood standing in the forests were as follows, *viz.:*—oak, 1½*d.* to 5¼*d.*; beech, 1*d.*; other broad-leaved species, 1½*d.* to 3½*d.*; spruce and silver fir, 1*d.* to 2½*d.*; larch and Scot's pine, 2*d.* to 3*d.*; firewood from a nominal price to ⅓ of a penny. 2,140 permanent and 6,300 temporary workmen are employed in the forests. For the accommodation of the officers and guards, and for offices, the following buildings have been erected:—

For officers only, first class houses of more than three rooms, ...	83
For officers only, second class houses, ...	12
For officers and guards, ...	359
For guards only, ...	250
Offices, ...	9

There are 149 communes having rights in the forests; in 81 of these the rights have been commuted or regulated, and the question is in process of settlement in the 68 others. The number of forest offences committed in 1884 was 5,267, and the fines inflicted amounted to £1,713.

The figures which follow relate to three of the Conservatorships only, as information regarding Bustyaháza was not obtained. During 1884, 15 acres of forest were burnt, 38 acres were carried away by inundations, 142 acres of oak were destroyed by the caterpillars of the processionary moth, *Cnethocampa processionea*, (Stephens); 216 acres of spruce were ruined by the typographer beetle, *Bostrichus typographus;* and 412,000 cubic feet of timber were blown down or crushed by snow. The comparatively small amount of damage done by fire is explained by the limited extent to which grazing is practised in the forests on these hills.

There are in these three Conservatorships—

1,135 miles of first and second class roads.
139 miles of wet and dry timber slides.
494 miles of river used for floating.
17 miles of canals used for floating.
43 reservoirs, containing 114,000,000 cubic feet of water, and 30 booms aggregating 3,844 yards in length.

Marmaros-Sziget.

On reaching the department of Mármaros, we ascended the valley of the Tisza, and arrived at Mármaros-Sziget on the afternoon of the 3rd July, 1886. Here we were hospitably received at the house of M. Belhazy, Forest Secretary, and at once conducted over the great saw mills, which have been established by private enterprise on the bank of the canal just outside the little town. As we entered the extensive yard, we were greatly astonished at the vast quantities of timber by which we were surrounded. Piles of logs, few of them of remarkably large diameter, covered the ground in every direction; and the canal was crammed with rafts, the timber forming which was, we were told, not more than a single day's supply for the saws; while, within one month, the whole yard-full would be placed on the benches, fifteen in number, on which from 18,000 to 21,000 cubic feet of wood are cut up daily. The machinery appeared to be old-fashioned, the saws cutting on the down stroke only, and being sharpened by hand. The occurrence of a conflagration in the yard would be disastrous; but as a precautionary measure, a large vat, constructed in a central position, is kept full of a fire-extinguishing fluid. A fire of waste wood, lit

for the occasion, was extinguished in our presence, in order to show us the effect of its use. The timber, which is almost entirely spruce, and comes from the State forests near the head of the Tisza, can be delivered by the Forest Department at the mill for 1*d.* per cubic foot, which rate includes all charges for felling, logging, and transport by water over a distance of 56 miles; and as the proprietor of the mills pays 2*d.* per cubic foot for it, there is a surplus of 1*d.* for the maintenance of the forest, and as profit.

Accompanied by M. Halázy, the acting Conservator, we left Mármaros-Sziget early the following morning, and drove up the valley of the Tisza, stopping for a short time to look over the Crown Prince's shooting-box at Lonka, which is situated near the bottom of the valley, and is surrounded on all sides by hills covered with forest, chiefly of beech. Spruce was tried, but it was unable to withstand the summer heat. After a brief halt, we continued our journey up the valley, meeting a great many rafts on their way down to the saw-mills. Here, in the lower part of the valley, the crop is principally beech, mixed with some oak, spruce, and other trees. Oak and spruce are the only kinds of wood that it at present pays to export; beech is girdled, but if it cannot be sold as fuel, it is left to die in the forest; and as oak-wood does not float alone, it is either mixed with the fir logs to form the rafts, or laid on the top of them, and thus conveyed down stream. Further on, we reached the spruce forests, which are here almost unmixed with other species. They suffer very much from storms, which do an enormous amount of damage, as the roots of this tree are very superficial, and it is consequently very liable to be thrown down. Something like one-half of the forests in this conservatorship are stocked with spruce; and it is said that in July 1885, during a storm which lasted 36 hours, half a million of trees were overturned. In the place where we were, the storm had been severely felt, the entire forest having been laid low over considerable areas, and the barked stems were seen lying in masses on the ground, like so many spilikins. The course of the wind could easily be traced down the valley. Here, it had struck a spur on the right side of the stream, whence, after knocking over every tree in its path, it was diverted to the opposite side, and thence back again; and it thus pursued its downward zigzag course, completely destroying the forests alternately on the right and on the left side of the valley. It is easy to imagine that such occurrences interfere very seriously with the provisions of the working plan, the regular fellings having to be postponed in consequence of them. The dread of these storms prevents the Hungarian foresters from regenerating their pure

spruce forests by the natural process; for if the crop were removed by successive instalments, and the wind were thus permitted to enter the forest, the trees left standing after the first felling would be at once blown down. Hence there is nothing to be done but to clean-fell and regenerate artificially. This is effected two years after the felling, either by sowing in vertical lines of patches—a gang of men moving up hill in a line—or by planting seedlings of from three to four years old. But in oak forests, which are rarely seen here, the regeneration is effected by natural means, one seed-felling and two secondary fellings being made. When trees have been felled or blown down, the bark, which is exported for tanning, has to be removed from the trees at once, or they would be attacked by insects (usually *Bostrichus typographus*), and the timber must be got out as soon as possible. This is done by means of earth slides, and dry and wet wooden slides, which are used to convey it to the bank of the stream. We saw many such structures, principally temporary dry wooden slides, formed in cross-section of six or eight round poles, disposed in the form of a trough, with a downward inclination of 5° or 6°; the poles at the sides have a larger diameter than those at the bottom, and the outer side of the trough is raised at the bends, so as to prevent the logs from jumping out. At one place, a slide of this kind was carried across the stream, and the logs were projected on to a piece of flat ground on the opposite bank. A stout pole or tree-stem, one end of which rested on the ground while the other was raised on a pair of legs, was ingeniously used to cause the logs, after striking against it in their fall, to fly off in any required direction, and thus prevent their forming an unmanageable heap round the mouth of the slide.

After going some distance further up the easterly branch of the Tisza, we entered the spruce forests, and near the head of the valley, at an altitude of 2,930 feet, reached the Hoverla reservoir. We were now not more than 2½ miles from the water-shed of the Carpathian range, which, rising to a height of about 6,600 feet, here forms the boundary between Hungary and Galicia. The stream, which is shallow and rocky, with a mean fall of about 1·20 per 100, is, in its ordinary state, unfitted for floating purposes; and the system here adopted is to arrest the water coming from the upper valleys, by means of a dam, which forms a reservoir. When this becomes full, the water entering it at the upper end passes the dam by an escape, which is always kept open, and the stream below has then, of course, its natural depth. The Hoverla dam, which is 39 feet high, is formed of timber and stones, turfed over and faced

with clay on the upper side. There are in it two outlets for the water, at different levels, each provided with a wooden sluice gate raised by levers. When the reservoir is about to be used, some 30 rafts, of from 12 to 24 trees each, are collected below it, lying in the shallow water, and anchored to the bank. The sluice gates are then opened, and, half an hour after the head of rushing water has passed down, the leading raft is let go, the other rafts being loosed in succession at intervals of five or six minutes. The reservoir empties itself in about four hours, the temporary flood thus caused increasing the depth of the stream by about 2½ feet, which enables the rafts to float easily over the stones and rocks with which the bed is lined, until they reach the larger river. Meanwhile, the sluice gates having been closed, the reservoir is allowed to refill itself.

The workmen engaged in forming the rafts use a very conveniently shaped lever for moving the timber down to the water's edge, where the small ends of the logs are laid down stream, and are then firmly secured by means of a stout wooden cross-piece, pegged down to a level bed, axed out to receive it; the ends are rounded off below, so as to facilitate the passage of the raft over sunken rocks and other obstacles. The heavier extremities of the logs are not fixed in this manner, but are loosely attached by means of willows, oak saplings, or spruce branches, which, after having been passed through the fire, are twisted into ropes, and then forced into holes drilled into the logs; they are kept there by means of pegs firmly driven in beside them. There are usually three such ropes, one from each outer log to the fourth or fifth log counting inwards, and a third joining these two across the middle of the raft. The heavy ends are thus allowed sufficient play to enable them to pass over rocks on which they might otherwise catch. A wooden pivot for an oar is erected at each end of the raft.

On our way back from the reservoir, we paid a visit to the married priest of the Russian church, who received us most hospitably; and after dining with the officer in charge of the Division, we went down to the forest house at Raho, where, having driven 69 miles during the day, we passed the night.

We left Raho on the morning of the 5th, in a shower of rain, and ascended the valley of the northern branch of the Tisza, where a few silver firs were seen mixed among the spruce. The latter tree is ordinarily felled at the age of from 100 to 120 years, when it has in this locality a diameter of from 18 to 20 inches; but the present being the first fellings since the framing of the working plan, the trees are taken as they come, and those recently felled

were not more than from 60 to 70 years old. We saw the remains of an old dry slide, made of round timber, and said to be five miles long; and further on, after passing through a forest where the broad-leaved trees were being cut out in order to favour the growth of the young spruce under them, we entered a small saw-mill driven by water, the proprietor of which had an excellent set of drawings on the walls of his shed, showing how to cut up logs of various diameters in the most advantageous manner.

We were now once more approaching the line of water-shed and the Galician frontier, immediately beyond which, among the northern slopes of the Carpathians, are the sources of the Pruth; and we made a short halt at the village of Körösmezö. The valley is here wide and fertile, some of the houses being fairly commodious and well built, but most of them are mere hovels. We were taken to see the Russian church, where we were very politely received by the parish priest; and after breakfast we were driven on by the forest officer in charge of the Division, in his own carriage, drawn by a first-rate pair of horses. We passed through the village market; and then, after stopping to examine a shed for drying spruce seed, we traversed a forest where 14 years ago all the trees were blown down. The year happened to be a very good one for seed, and the result has been that there is now an excellent crop of young self-sown spruce on the ground; but such good fortune is not often experienced. About this part of the valley there were immense quantities of windfalls. It might indeed almost be said that the wind both regulates the fellings and executes them; for on account of the enormous number of trees blown down, the regular fellings provided for in the working plan can seldom be carried out. We looked over a nursery of spruce and silver fir, with some Scot's pine and larch. The silver fir, which cannot be raised out in the open, can only be grown in localities where natural regeneration by means of successive fellings can be practised.

Our attention was next called to a "river slide," constructed for passing the rafts over a steep rocky part of the river. The entire bed and sides of the stream were lined with fir poles, laid lengthwise, the floor being formed in broad low steps, over which the rafts pass to the foot of the huge staircase thus formed. At the lower end of the structure, there is a deep pool, on which the last step floats, hinged by chains to its predecessor. When the rafts are shot down on to this floating platform or table, which "gives" somewhat under their weight, they pass on in a horizontal direction down stream, instead of, as they would otherwise do, diving to the bottom of the pool.

Here we again studied the construction of the rafts. The minimum diameter of the logs at the thin or front extremity is $6\frac{1}{4}$ inches, and midway between the two ends, or between the points nearest to each end at which the tree is sound, a mark is cut, the girth over which regulates the sale rate; but this system does not prevail in all districts. The length measurements are effected with a rough pair of compasses, formed by a bent wand, kept in position by a tie-piece, and furnished with metal points. The withes used for connecting the logs at the thicker ends are prepared by taking green spruce branches or young trees, 10 feet long, and passing them through a fire, in which they are turned round on their axis and burned or roasted. The thin end is then fixed by means of a peg into a hole at the foot of a stout post, when the butt is split, and a picket being introduced cross-wise and secured with a bark rope, the branch or young stem is twisted, the workmen walking at the same time round the post, up which the withe winds itself spirally. After this treatment, it is sufficiently tough and flexible to be used in the manner previously described. The men who navigate the rafts wear pointed leather shoes, of almost exactly the Indian pattern, under which they are obliged to bind a sort of iron clog with four spikes, to prevent their slipping on the wet rafts when passing over dangerous places.

On leaving the rafts, we inspected an earth slide, down which the logs are brought from the forest to the river. In order to prevent their foremost ends from burying themselves in the ground at its foot, a staging of poles is there erected, with a gentle downward slope, its lower end standing a few feet above the ground. As the logs come down, they are received on this platform, and from it they are shot out in a nearly horizontal direction. Near this point we saw a remarkable sight. On a spur above us there had once been a mixed forest of spruce and larch; but a violent storm overturned the shallow-rooted spruce, not a single tree of which species was left; while the deeper and stronger roots of the larch trees enabled them to resist the force of the wind, and they were all left standing. They are now kept for seed.

Towards evening, after travelling a distance of 28 miles, we reached the forest house at Apsinecz, where we were to pass the night, and where several other forest officers awaited us. Here there is a large reservoir, covering an area of 16 acres, and having a depth at the dam of 42 feet. It contains over 14,000,000 cubic feet of water. We descended the shafts in order to see the sluice gates. They and the galleries weaken the dam at the part where the pressure of the water has the greatest force, and it is a pity

BENGAL SECRETARIAT LIBRARY

that the galleries cannot be dispensed with. The two extremities of the dam are constructed of earth, with a wall of clay inside it and a rough stone facing on the upper side; but the central portion is made of wooden frames filled with stones, the slope towards the water being faced with timbers. The joints between these are closed by battens, secured with a peculiarly-shaped double nail, which grasps and fastens them down very closely. The escape channel is constructed to carry rafts; so that when the reservoir is full, timber can be floated from higher up the valley over its surface and thence down country. The stream, which is here only a few yards wide, has a fall of about 6 in 100, and looks like a small Highland trout-stream, numerous stones standing up in its bed; but when flushed by means of the water in the reservoir it can carry rafts of large timber. Before going in to dinner, we went to look at the forest at the back of the house. Wherever windfalls had occurred there was excellent natural reproduction. In a place where the young poles had grown up to a height of about 25 feet, some thinnings had been made, the felled stems being left on the ground, as they are not saleable. Deeper in the forest, there appeared to be a dense crop of pure spruce trees, standing so close together as almost to exclude the light of day. The altitude of the reservoir is 2,900 feet. The thermometer here is said to descend during the winter to 20° below zero, Fahrenheit; but in 1879-80, which was an exceptionally cold year, it went down much lower.

(*To be continued*).

THE DANDOT COLLIERY.

Our readers will remember that Dr. Warth was deputed a little more than four years ago to make explorations for workable coal in the Salt Range in the Punjab, and that the result of his labours was to prove the existence of a seam large enough to supply the requirements of the North-Western Railway for 70 years. The working at Dandot was started nearly three years ago, but the output has not yet reached anything like the figure attainable, and the railway can still consume all the firewood the Forest Department is able to give it. The total quantity of coal from Dandot that passed through the Kheorah Railway Station was only 6,800 tons, valued, delivered on the North-Western Railway, at Rs. 15 a ton, or about one lakh of rupees in the aggregate. This small output cannot be ascribed either to a fault in the seam (there have been no complaints whatever as to its continuity) or

to insufficient means of export. A branch line of railway, only 2½ miles long, and on the broad gauge, runs from Kheorah to Kálápáni at the foot of the hill, at the top of which Dandot is situated, while a double line of tramway for the ascending and descending coal trucks respectively, which are drawn up and allowed to run down by means of wire ropes, connects Kálápáni with the mouth of the mine. Besides this double line of rails, there is an inclined wire rope, a third of a mile long, suspended over an almost sheer cliff, and intended for running down sac-loads of coal by the force of gravity alone. For some reason unknown to us, neither the double tramway nor the inclined wire-rope way has been in use lately, and the coal is brought down to Kálápáni on donkeys and mules.

We hear that the roof of the mine has fallen in in places, resulting in some cases in serious injury to life and limb, and that unless thorough precautions are soon taken, there is fear of the old workings catching fire spontaneously, and thereby causing the inevitable destruction of a large proportion of the valuable mineral.

SEED OF *BAMBUSA ARUNDINACEA.* -

I SHALL be glad to procure and send any Forester as much seed as he wants of the *Bambusa arundinacea,* which has just flowered very extensively throughout the Anamalais.

The seed will be from the same piece of forest, and possibly from the same clumps from which I got those large specimens referred to in an earlier note.*

J. G. F.-M.

THE DOUGLAS FIR IN SCOTLAND.

(*Continued from page* 76).

During late years a large number of Silver fir woods, of varying age, from early youth up to maturity, have been carefully measured, arranged in different qualities—best, middling, and inferior—by ascertaining their height, sectional area at height of chest, and their cubic contents ; by dividing the actual volume by the product of height × sectional area ($h \times s$), the form figure has been ascertained. The tables thus constructed can now be applied to the measurement of standing woods without any fellings whatever, by merely measuring the height and sectional area, and by taking the form figures from the tables.

* See amongst Notes, Queries and Extracts lower down.—[ED]

The following extract shows the mean volume of solid wood in a well-stocked Silver fir wood growing in a locality classed as belonging to the first quality up to an age of 140 years, beyond which age no figures are available :—

Age, years.	Number of trees per acre.	Mean height, in feet.	Sectional area at height of chest, square feet per acre.	Form figure for solid wood.	Volume of solid wood (3 inches diameter and upwards), cubic feet per acre.	Mean Tree.	
						Sectional area, sq. feet.	Diameter, inches.
32	1,745	17	93	·65	1,032	·053	3·1
50	931	42	177	·47	3,458	·190	5·9
75	433	75	243	·47	8,532	·561	10·1
100	213	97	295	·46	13,291	1·385	15·9
125	126	109	335	·45	16,291	2·659	22·1
140	101	114	353	·44	17,720	3·495	25·3

In order to prepare a similar table for Douglas fir, it is necessary to ascertain the total sectional area per acre, the mean height, and the form figures for the years 50, 75, 100, 125, and 140 years ; and this, with the scanty material at present available, can only be done in a rough and preliminary manner.

Sectional area.—We know that the sectional area of a dominant (or leading) tree is as follows :—

At the age of 50 years	...	=	1·115	square feet.
" 75 "	...	=	1·847	"
" 100 "	...	=	2·885	"
" 125 "	...	=	3·715	"
" 140 "	...	=	4·307	"

In order to ascertain the total sectional area per acre at these periods, we must ascertain the number of trees which a well-stocked acre is likely to contain at the same periods. We know (1), that a well-stocked acre contains 202 Douglas firs at the age of 32 years ; (2), that 101 Silver firs 140 years old, of a mean sectional area of 3·495 square feet, find room on an acre ; (3), that generally a Douglas fir requires at least as much room as a Silver fir of the same sectional area, and, in fact, somewhat more, owing to the somewhat more spreading nature of the branches ; and (4), that a Douglas fir 140 years old shows a sectional area of 4·307 square feet.

Taking these facts into consideration, the following numbers of Douglas firs per acre have been estimated :—

At the age of 32 years,		...	...	...	202
„	50 „	...	...	...	150
„	76 „	...	...	...	125
„	100 „	...	...	...	100
„	125 „	...	...	...	88
„	140 „	...	...	...	80

By multiplying these numbers with the mean sectional area per tree, the total sectional areas of all trees per acre are obtained.

(*b*). *Height.*—The following facts are at our disposal :—(1), A Douglas fir 32 years old has a mean height of 60 feet ; mean annual height growth = 22½ inches ; (2), a Douglas fir 57 years old has a mean height of 90 feet ; mean annual height growth (from 32nd to 57th year) = 14 inches ; both grown in Perthshire ; (3), mature Douglas firs in the most favourable localities of North America are reported to reach a mean height of 213 feet ; such trees are often up to 500 years old, but it is not known, at what age the height growth ceases : let us assume that it is very slight after the age of 250 years. With these facts before us, the heights up to an age of 140 years may be estimated as follows :—

At the age of 32 years,		...	...	...	60
„	50 „	...	...	...	82
„	75 „	...	...	...	105
„	100 „	...	...	...	125
„	125 „	...	...	..	141
„	140 „	...	...	...	150

(*c*). *Form Figure.*—The form figures for Silver fir are :—

At the age of 32 years,		...	...	...	·65
„	50 „	...	...	...	·47
„	75 „	...	...	...	·47
„	100 „	...	...	...	·46
„	125 „	...	...	...	·45
„	140 „	...	...	...	·44

The form figure of the Taymount plantation shows ·39 for an age of 32 years. This is very considerably below the form figure for Silver fir, and it is in accordance with the facts of the case. The Douglas fir is a much more tapering tree than the Silver fir, and the highest form figures which can be expected may perhaps be placed as follows :—

At the age of 32 years,		...	...	=	·39
„	50 „	...	...	=	·38
„	75 „	...	...	=	·38
„	100 „	...	...	=	·37
„	125 „	...	...	=	·36
„	140 „	...	...	=	·35

By utilising the figures thus estimated the following table for the Douglas fir has been calculated :—

Age, years.	Number of trees per acre.	Mean height, in feet.	Sectional area at height of chest, square feet per acre.	Form figure for solid wood.	Volume of solid wood (3 inches diameter and upwards), cubic feet per acre.	Mean Tree.	
						Sectional area, sq. feet.	Diameter, inches.
32	202	60	158	·39	3,738	·782	12·0
50	150	82	167	·38	5,204	1·115	14·3
75	125	105	231	·38	9,217	1·847	18·4
100	100	125	288	·37	13,322	2·885	23·0
125	88	141	327	·36	16,599	3·715	26·1
140	80	150	345	·35	18,112	4·307	28·1

Let us now compare the volume of the Douglas fir with that of the Silver fir :—

Age.	Growing stock per acre, in cubic feet.		Mean annual increment, in cubic feet per acre.	
	Douglas Fir.	Silver Fir.	Douglas Fir.	Silver Fir.
50	5,204	3,458	104	69
75	9,217	8,532	123	114
100	13,322	13,291	133	133
125	16,599	16,291	133	130
140	18,112	17,720	129	127

This Table indicates that with a rotation not exceeding about 90 years the Douglas fir, owing to its more rapid early development yields a larger outturn of solid wood than the Silver fir. Under a rotation of 90 to 120 years the returns in volume are about equal. Under a rotation of more than 120 years the Douglas fir will again yield larger returns of volume than the Silver fir. The latter is of little consequence in this country, because no landed proprietor would think of working his plantations under a rotation of more than 120 years, unless he had a particular fancy to see large trees on his estate. Attention must also be drawn to the fact that the mean annual increment culminates between the years 100 and 125, so that a rotation of, say, 110 to 120 years will yield, in the long run, a larger number of cubic feet of

solid wood, than either a shorter or longer rotation, both in the case of Silver fir and, as far as I can judge, also of Douglas fir.

The above data, it must always be remembered, refer only to the final cuttings. I have no data whatever which would enable me to compare the intermediate returns (thinnings) of Douglas fir and Silver fir. I may also draw attention to the fact, that the numbers of cubic feet given above refer to the actual volume of solid wood. In order to obtain the number of cubic feet calculated from the quarter girth, as is usual in this country, the numbers must throughout be reduced by about one-fourth (more accurately 22 per cent.).

I have compared the returns of the Douglas fir with those of the Silver fir, because we possess accurate tables giving the volume-yield of the latter at different ages. It would have been more to the purpose to substitute the larch for the Silver fir, but unfortunately the laws of increment of the former have not as yet been so minutely studied and recorded as in the case of the latter. So much, however, is known, that the larch developes much more rapidly than the Silver fir during youth, and that it yields larger returns of solid wood under a rotation of 75 years, and perhaps even 80 years, in favourable localities ; under a higher rotation the volume-yield of the Silver fir is greater than that of larch. Hence it may be safely said that under a rotation of 75 and perhaps even 80 years the larch will yield as much solid wood as the Douglas fir whenever they are grown in regular fully stocked woods, and in localities of equal quality—with this difference, that the material yielded by the Douglas fir will consist of a smaller number of trees per acre, with a greater mean diameter per tree.

The laws of increment of Scotch pine are well known. On good localities, like that of Taymount, the growing stock of a fully stocked acre compares as follows with that of Douglas fir :—

Age.	Volume of solid wood per acre, in cubic feet.		Mean annual increment per acre, in cubic feet.	
	Douglas Fir.	Scotch Pine.	Douglas Fir.	Scotch Pine.
50	5,204	5,600	104	112
75	9,217	7,900	123	105
100	13,322	9,300	133	93

Under a rotation of 50 years Scotch pine may even yield a little

more material than the Douglas fir, but later on it drops considerably behind.

Quality of the Timber.—The next point of importance is the quality of the timber. The wood of the Douglas fir has a great reputation, and in America its quality is believed to be equal to that of larch timber. In how far the Douglas fir grown in this country will come up to that standard remains to be seen. The larger sized trees so far cut on the Scone estate have been freely bought at the same rates as those usually paid for larch, but sufficient time has not elapsed to show the comparative merits of home grown Douglas fir and larch timber.

A few words must now be added with regard to the *safety of production.* First of all it is an undisputed fact that Douglas fir can, in this country, only be successfully grown in sheltered localities, because its leading shoot, and even the lateral branches, are very liable to be broken by wind. This reduces the area suitable for its cultivation very considerably.

Then there can be no doubt that the Douglas fir, in order to yield large volume returns, requires good fertile and fresh or moist soil, in fact, soil on which any other species will produce a large volume of timber. Such land can, moreover, be used to greater advantage for field crops. What we specially require are species which will do well, or at any rate fairly well, on lands which are not suitable for field crops.

Finally, it has been said that the Douglas fir is not exposed to any *disease*, while the larch, for instance, suffers so much in this respect. With regard to this point, it will be as well not to shout until we are safely out of the wood. It will be remembered that the larch disease did not show itself in Scotland until about 60 years ago. Only quite lately Mr. McGregor, who has been on His Grace the Duke of Athol's estates for more than 40 years, pointed out to me, that he has never seen the larch cancer on any of the old larch trees, except on those parts of the trees which have been formed during the last 60 years. This certainly seems to indicate that the disease did not exist before the year 1820 or thereabouts.

No doubt exists now that the larch cancer is the result of the ravages of a fungus (*Peziza Willkommii*), the spores of which enter the tree through wounds which were caused by insects (*Aphis*), frosts, violence, &c. Only a few days ago, and after I had commenced this article on the Douglas fir in Scotland, I saw in a German forest journal a notice of the discovery of an injurious fungus on the Douglas fir. Dr. von Tubeuf, a pupil of the cele-

brated pathologist, Dr. R. Hartig, of Munich, has now described a fungus, (*Botrytis Douglasii*,) which is parasitic on the Douglas fir: it has been noticed during the last ten years in several widely separated localities in Germany on the trees in the experimental plantations which have been made of late years. As far as is known at present, the fungus attacks in the first place the young shoots, the needles of which turn brown or gray, the whole being ultimately spun over with mycelium; it then extends and kills ultimately the plants. It has also been found that this same fungus can be cultivated on two to six year old plants of silver fir, spruce, and larch. Dr. von Tubeuf found, as a general rule, that those Douglas firs especially were attacked which grew in fully stocked areas, where the branches of the trees interlaced; and in these cases the lower branches were more severely attacked than those higher up. He also noticed that free standing trees were free of the disease, and he naturally draws the conclusion, that infection depends on a high degree of moisture, such as is found in dense woods, while free-growing trees, exposed on all sides to drying air currents, escaped. Now, what does this mean? Simply that the Douglas fir must be grown in thin open woods, and if so, good-bye to any high returns per acre, such as Silver fir, larch, or even Scotch pine will yield.

Dr. von Tubeuf adds some very sensible general remarks, from which I give the following extracts. He says:—

"In introducing an exotic species, the first question should be whether, if grown in the same locality, it possesses any real advantages over our indigenous species, either in consequence of a superior quality of wood, rapid growth, large dimensions, active reproductive power, &c., or by more successfully resisting any unfavourable conditions of the soil or climate, or by being less subject to natural enemies, such as game, animal or vegetable parasites, &c. A further most important question is, whether with the exotic tree we are likely to introduce new enemies to our indigenous trees; and in this respect we need only remind the reader of the imported enemies of the potato, the Colorado beetle, the enemies of the vine, &c.....

"Amongst the enemies of our own trees, a large number attack without distinction the exotics lately introduced; *Curculio*, *Bostrychus*, cockchafers, caterpillars and beetles attack exotics just as well as indigenous trees; *Trametes radiciperda* (one of the most formidable of fungi) destroys the wood of the Douglas fir like that of any other species."

These words deserve serious consideration. It is more than pro-

bable that the Douglas fir will, with us, in the course of time, develop its full share of enemies, if not more, considering that it is an exotic species.

Before concluding I desire to express a hope that my object in publishing these notes on the Douglas fir may not be misunderstood. The cultivation of the tree in Great Britain and Ireland looks at present very encouraging, and I trust that experiments will be continued ; but I deprecate altogether rushing into extensive plantings, as advocated by the correspondent of the "Perthshire Constitutional," until time has shown that the tree really deserves to supersede the species hitherto cultivated by us, and of which we know what to expect. My personal opinion is that the Douglas fir will just as little revolutionise our sylvicultural operations as the Weymouth pine has been able to do, though great things were expected of it at one time. There is a great difference between nursing up a single tree in a fine soil and under otherwise favourable conditions, and the growing of a species on a large scale for economic purposes ; in the former case only exceptional results present themselves to the eye, while in the latter case averages must be looked for and reckoned with.—W. SCHLICH in the *Gardeners' Chronicle.*

SAL BARK AS A TANNING MATERIAL.

REFERRING to the last paragraph of the paper on the above subject in the "Indian Forester" of February, I have the honour to state that, under Captain Wood's orders, I have been pushing the use of sál bark for tanning. From the Pilibhit forests I have been able to sell a large quantity. To take the past month only, 40 two-bullock cart-loads were sold at Rs. 2 per cart, for use in Bareilly chiefly. You truly state that in some places "tanners are too much wedded to the use of babul bark to take up a new tanning substance, &c." I find this to be the case in Lucknow. To introduce sál bark there, I sent in 30 maunds, in one maund bundles, and by beat of drum, as well as by written notices in the tanners' quarter of Lucknow, intimated that I would give sál bark, free, for experiment. To this I got no response. After sending for the Chamár Chowdhri, I persuaded him to carry away the sál bark. After trial (I presume) he informs me there is no tannin in it! I shall send a larger quantity to Cawnpore for trial, and will let you know the result.

C. J. P.

II. Reviews.

ANNUAL REPORT OF THE FOREST SCHOOL FOR 1887-88.

The Report shows that a considerable change in the School may shortly be expected. The shadows which presage these coming events may be found in a review by the Government of India which opens the green book now before us. Referring to the printed Heads of Questions set at the examinations, the opinion is there expressed that the standard aimed at may be, under present circumstances, too ambitious. And it is further said that it will probably be found advisable next year to have the examinations held by a Committee unconnected with the teaching of the School. And certainly, it does seem as if the teaching in some branches was above the heads of the students, though in others it is scarcely as advanced as might be desirable. The Appendix gives the Heads of Questions in the following subjects :—

1. *Road-making and Building.*—This also includes timber-transport.

2. *Forest protection against insects, etc.*—The papers show, however, that the 'etcetera' covers a considerable ground, for while the main questions are on Entomology, there are branches off as far as Vertebrata on the one hand and Protozoa on the other, while forest protection is conspicuous by its absence.

3. *Sylviculture.*

4. *Utilization.*

5. *Practical Forestry.*

6. *Vegetable Morphology and Physiology.*

7. *Systematic Botany.*

8. *Physics and Chemistry.*—Which also includes mineralogy, geology and physical geography.

A glance at the questions set in these papers gives one good food for reflection, and we have attempted to compare them with those given in the Matriculation, First Arts and Bachelor of Arts Examinations of a large Indian University. Of course all students who are allowed to enter at Dehra must have already passed the matriculation examination, and they may consequently be expected to be aiming at a higher test, whether it be the University First Arts or the Ranger's diploma of Dehra Dún. In some subjects the examination seems to show

that the teaching is fully up to the standard of the First Arts, and even higher, for in the case of Botany the papers compare well in point of difficulty with those usually set for the Bachelor degree. On the whole, therefore, and considering what a wide range of subjects is covered by the Forest School curriculum, we think that there is a good deal to be said for the view taken by the Government of India. And especially are we of opinion that in animal and vegetable physiology, and in mineralogy, judging from the questions given, the course is unnecessarily severe, and the teaching unnecessarily advanced. The questions in road-making, building and transport are not at all difficult, and appear to cover the ground of what a Ranger ought to know. So too, those on physics, chemistry, geology and physical geography, cover very well those elementary experimental and natural facts which everyone of ordinary intelligence engaged in scientific work of ever so low a type ought to know. The systematic botany questions seem to cover quite a sufficiently wide field, to make the physiology and morphology unnecessary, especially if it is accompanied by sound practical teaching, for what is wanted is, not that a Forest Ranger should be able to discourse learnedly on sclerotic cells and collenchyma, but that he should be able to use a simple Flora to advantage, and with its aid and a simple dissecting microscope or an ordinary lens, ascertain the names of the common plants of his forests, with their uses and qualities. The Forestry teaching appears to us to be excellent, and the question system of teaching adopted by Mr. Fernandez is one which, if anything, will put a stop to the learning of lessons by rote, and bring the student to think instead of to merely reproduce his teacher's words. If anything, we would like to go a little further with the Forestry, and add to it the Elements of Organization, for, as soon as a Ranger joins his District, he finds that although he may not have to prepare working plans himself, he is yet called upon to carry out those made by others.

It will be interesting to hear the results of the independent examination proposed by the Government of India (we were not ourselves present at that held by the Forest Conference which, from all accounts, would not seem to have been altogether a success), and we think that the result will be that it will be shown that the Government has been misled by a few hard words in the physiology papers into thinking the teaching more ambitious than it really is; and it is possible that though the questions seem in some cases hard, yet the standard of answer required is low. We have indicated what, in our opinion, are its faults, and we hope that if any changes are made, they will be only made after the most care-

ful consideration, and after consulting the Local Governments and local Forest officers whose support is, after all, a vital necessity if this excellent school is to continue to do in future, as it has done in the last few years, educate a class of upper subordinates who can work the forests of the whole of this vast country in accordance with the principles of forest science. During the year 1887-88 the number of students under instruction was 75. Of these Madras contributed the largest contingent, 19; the North-Western Provinces, 11; the Punjab, 8; the Lower Provinces of Bengal, 6; and the other provinces of the Government of India, 7. Besides the Government students there were 9 from Native States—Patiála, Jeypur, Rewah, and Partabgarh, and 9 private students. The Presidency of Bombay has not yet thought fit to join: although it sent delegates to the Conference of 1886, it does not seem yet to care to exchange the home teaching at Poona (of which we wish some Bombay Forest officer would tell us something) for the more general and, we feel sure, more scientific, teaching of Dehra.

The number of certificates granted during the year was 17. It is strange that one student, Forester Mr. Tapp, from Madras, obtained no less than five prizes, and yet failed in Forestry, and had to be remanded for another year. In the Vernacular course ten certificates were granted, all to students from Northern India, whose language is Hindustani.

The account of the work done on tour and in the forests round Dehra is very interesting. It is satisfactory to find that the forest operations are taught by practical experience, the students having themselves to mark the trees for felling, construct nursery beds, and even to make the borings for blasting operations. The chief practical work was naturally done in the School Circle forests, where Mr. Fernandez' working plan for improvement fellings in a temporary rotation is in force in the Dún sál forests; and carefully made plans are prescribed for the coniferous forests of Jaunsar. But they went still further a-field than this, for they visited, besides, the well-known Changa-Manga plantation in the Punjab.

We trust we have shown that the School continues to do excellent work in spite of some changes in the teaching being possibly advisable, and we hope that we may be able to record as satisfactory progress every year as has been made in 1887-88.*

* The foregoing Review, we have the author's permission to state, was not written by us, although we agree generally with him in the comments he has made and the opinions he has expressed. We need hardly say that he speaks with the authority of one who, besides having studied with distinguished success at one of the Continental Forest Schools, has made himself personally conversant with the most recent system of teaching pursued at Nancy and at several of the German Schools.—[Ed.]

THE MADRAS GAME LAW.

In our remarks under the head of "The shikar difficulty solved" which we published in our January Number, we did the Madras Government the injustice of omitting to remind our readers that in the matter of regulating the pursuit and killing of game and fishing in rivers in the State forests, it was that Government which was first in the field. On 26th October last the following Rules were promulgated, which, we regret, we did not at the time extract from the Fort St. George Gazette :—

I.

Rules under Section 21 (h) of the Madras Forest Act (Act V. of 1882) for regulating the pursuit of game in Reserved Forests.

1. Any person who may desire to hunt, shoot or fish within the limits of any or all the reserved forests of any district shall be bound to take out a license at the office of the Collector of the District.

2. The payment to be made for such license shall be Rs. 5, and the said license shall not be transferable. It will be available only for the currency of the calendar year to which it relates, whether it be taken out at the commencement of, or during the currency of, the year.

3. The Collector may, by Notification in the District Gazette, declare that any reserved forest shall be closed annually against hunting, shooting or fishing for any period between the 1st February and 1st August, and may modify or cancel such notification, and after the publication of such notification no license taken out under Rule 1 will be held to give authority to hunt, shoot or fish in such reserved forest during the close season laid down in such notification. Provided that it shall be at the discretion of the Collector, in the interests of any reserved forest, to declare it closed against all hunting, shooting or fishing for the whole of any particular year.

4. The poisoning or dynamiting of water or the setting of traps or snares for game in any reserved forest is absolutely forbidden. The catching of fish by the damming or baling of water is not prohibited.

N.B.—No elephant may be shot at (except in *bonâ fide* self-defence) by virtue of any license issued by a Collector under these rules. Any person wishing to shoot an elephant must apply to the Revenue Secretary to Government for permission to do so.

II.

Rules under Rule 21, Section 26, of the Madras Forest Act (Act V. of 1882) for regulating the pursuit of game in fuel and fodder reserves, grazing grounds and areas under special fire protection.

1. Any person who may desire to hunt, shoot or fish within the limits of any land notified as a fuel and fodder reserve, grazing ground or area

under special fire protection shall be bound to take out a license at the office of the Collector of the District.

2. No payment will be required for such license, but it will not be transferable. It will be available only for the currency of the calendar year to which it relates, whether it be taken out at the commencement of, or during the currency of, the year.

3. The Collector may, by notification in the District Gazette, declare that any particular fuel and fodder reserve, grazing ground or area under special fire protection shall be closed annually or in any year against hunting, shooting and fishing for any period between the 1st February and the 1st August, and may modify or cancel such notification, and after the publication of such notification, no license taken out under Rule 1 will be held to give authority to hunt, shoot or fish in such fuel and fodder reserve, grazing ground or area under special fire protection during the close season laid down in such notification.

4. The poisoning or dynamiting of water or the setting of traps or snares for game in any fuel and fodder reserve, grazing ground or area under special fire protection is absolutely forbidden. The catching of fish by the damming or baling of water is not prohibited.

N.B.—No elephant may be shot at (except in *bonâ fide* self-defence) by virtue of any license issued by a Collector under these rules. Any person wishing to shoot an elephant must apply to the Revenue Secretary to Government for permission to do so.

Form of License.

License to hunt, shoot or fish under Rule 21, *Section* 26, *of Act V. of* 1882 (*the Madras Forest Act*).

License to hunt* / shoot / fish { within the limits of (.....)

the fuel and fodder reserves, grazing grounds or areas under special fire protection in the..... District, subject to the conditions specified on the reverse, is granted to—

Name and Father's Name,.....

Residence,.....

Description,.....

Dated,.....

Collector.

* *N.B.*—As the case may be.

License to hunt, shoot or fish under Rule 21, *Section* 26, *of Act V. of* 1882 (*the Madras Forest Act*).

License to hunt* / shoot / fish { within the limits of (.....†)

the fuel and fodder reserves, grazing grounds or areas under special fire protection in the.....District, subject to the conditions specified on the reverse is granted to—

Name and Father's Name,.....

Residence,.....

Description,..... Seal.

Dated,.....

Collector.

* *N.B.*—As the case may be.

† The fuel and fodder reserves, grazing grounds or areas under special fire protection to which alone the license is intended to apply should be specified.

Conditions under which this License to { *hunt* / *shoot* / *fish* } * *is granted.*

1. The license is not transferable, and must be shown on demand to any Forest officer, any Revenue officer not below the rank of Revenue Inspector, or to any Police officer not below the rank of Head Constable. It holds good for the year 18.....excepting the close season (extending from .....to.....).
2. The poisoning or dynamiting of water or the setting of traps or snares for game is prohibited.

   The catching of fish by the damming or baling of water is not prohibited.
3. No elephant may be shot at (except in *bonâ fide* self-defence) by virtue of this license.

*4. I am aware of the situation and boundaries of the closed portions of the Forest specified below in which hunting, shooting and fishing is prohibited.

Any breach of the above conditions will render the holder liable to immediate cancelment of the license and to the punishments provided by law.

I agree to the above conditions, which have been thoroughly explained to me.

Dated,.....

Signature of Grantee.

* Closed areas.

Conditions under which this License to { *hunt* / *shoot* / *fish* } *is granted.*

1. The license is not transferable, and must be shown on demand to any Forest officer, any Revenue officer not below the rank of Revenue Inspector, or to any Police officer not below the rank of Head Constable. It holds good for the year 18.....excepting the close season (extending from .....to.....).
2. Th epoisoning or dynamiting of water or the setting of traps or snares for game is prohibited.

   The catching of fish by the damming or baling of water is not prohibited.
3. No elephant may be shot at (except in *bonâ fide* self-defence) by virtue of this license.

*4. I am aware of the situation and boundaries of the closed portions of the Forest specified below in which hunting, shooting and fishing is prohibited.

Any breach of the above conditions will render the holder liable to immediate cancelment of the license and to the punishments provided by law.

I agree to the above conditions, which have been thoroughly explained to me.

Dated,.....

Signature of Grantee.

* Closed areas.

It will be observed that this enactment is much less exclusive than the Central Provinces Rules. The former aims at leaving it

within the power of almost every one who can buy a matchlock or a net, to shoot and fish in the Reserved Forests, the latter confines the privilege mostly to the few sportsmen who can afford to lay themselves out for a regular shooting or fishing expedition, or to professional hunters and fishermen. Time will show whether the principle underlying the one or the other set of rules is the correct one, but the most extreme advocate of paternal rule must admit that the Madras law errs, if it does err, on the side of leniency, and that it may be adopted at once, with hardly any modifications to suit local conditions, even in those Provinces where the authorities profess most to respect the rights and susceptibilities of the people.

NEW FOREST LAW IN RUSSIA.

SINCE the 1st January, 1888, a new law has come into force in Russia for the conservation of the forests. It has been made applicable to the whole of Russia, including the Caucasus and Poland, but not Finland, which has a separate forest law of its own.

This new law only so far interferes with rights of property as to regulate their exercise when the interests of the country require it. The working of private forests is only put under regulation in those forests whose destruction would be prejudicial to the general interests of the country. In order to guarantee the rights and interests of private property, a council has been created in each Province, composed of the Governor and a certain number of representative owners of forest property. This council will be charged with the application of the law, a delicate mission, for agricultural and forest interests are often in conflict, and the people are still imbued with communistic notions as regards *forests*.—(*Revue des Eaux et Forêts, November 1888*).

III. Timber Market.

RETURN OF AVERAGE SELLING RATES FOR TIMBER AND BAMBOOS IN THE MEERUT, BULANDSHAHAR, CAWNPORE AND PILIBHIT DISTRICTS, FOR THE QUARTER JULY TO SEPTEMBER, 188[illegible].

Description.	*Timber Scantling, per score.*		*Bamboos, per 100 score.*		Remarks.
	From	To	From	To	
Meerut District.	RS. A. P	RS. A. P.	RS. A. P.	RS. A. P.	
Sál 10′ tors (poles), ...	15 0 0	20 0 0	...	...	Sál karis 40/- & 75/-.
Sál and sain, &c. karis, 12′ × 5″ × 4″, ..	60 0 0	75 0 0	...	...	Sain karis 30/- & 40/-.
Sál bed-posts, 7′ × 2½″ × 2½″, ...	14 0 0	25 0 0	...	...	From Rs. 14/- to 25/-.
Bamboos of 9′ to 10′, per 100 score, ...	...	...	30 0 0	50 0 0	
Bulandshahar District.					
Sál 10′ tors (poles), ...	...	...	...	...	No sál tors, karis or bed-posts are sold here.
Sál and sain, &c. karis, 12′ × 5″ × 4″, ...	...	...	...	...	
Sál bed-posts, 7′ × 2½″ × 2½″, ...	...	...	...	...	
Bamboos of 9′ to 10′, per 100 score, ...	...	...	75 0 0	80 0 0	
Cawnpore District.					
Sál 10′ tors (poles), ...	20 0 0	12 8 0	...	...	
Sál and sain, &c. karis, 12′ × 5″ × 4″, ...	25 0 0	20 0 0	...	...	
Sál bed-posts, 7′ × 2½″ × 2½″	7 8 0	5 0 0	...	...	
Bamboos of 9′ to 10′, per 100 Score, ...	...	...	50 0 0	20 0 0	

Description.	*Timber Scantling, per score.*		*Bamboos, per 100 score.*		Remarks.
	From	To	From	To	
Pilibhit District.					
Sál 10′ tors (poles), ..	2 0 0	3 8 0	...	...	
Sál and sain, &c. karis, 12′ × 5″ × 4″, ..	1 8 0	2 0 0	...	...	
Sál bed-posts, 7′ × 2½″ × 2½″, ...	0 4 0	0 5 0	...	...	
Bamboos of 9′ to 10′, per 100 score, ...	...	...	3 0 0	25 0 0	Class I. 25/-, II. 12/8, III. 6/4, IV. 3/-.

NAINI TAL: *30th November, 1888.*

J. M. BRAIDWOOD, *Deputy Conservator in charge.*

FIXATION OF LOOSE SANDS.—The reconnaissance of the proposed Delhi-Kotri line will, we understand, be completed this month, and Mr. Bell proceeds to Calcutta to write his Report. Of the whole distance it is estimated roughly that something like three-quarters in the aggregate is more or less covered with sand or sand hills, while from Sind to the Punjab the character of the sand is the same throughout, *viz.*, of very rounded particles of clean quartz. The origin of this enormous mass of sand is a problem for our geologists, and its subordination another for our Engineers.—*Pioneer.*

We ourselves would add that the Forest Department could give a wrinkle or two to the Engineers, and that without our help the most skilful amongst them must fail. Our Engineers will, however, never be put to the test, as Government has never seriously thought of constructing this line of railway, and Mr. Bell's deputation was only a sop thrown forward to stop Dr. Pollen and those who hunt with him.

IV. Notes, Queries and Extracts.

Sal Butter.—This is the oil present in the cotyledons of the seed of the sál. The seed is husked and boiled, and the grease that floats on the top of the water is then skimmed off. It sets firm and white like ghee in the cold weather, and in this respect resembles walnut and *Bassia latifolia* and *butyracea* oil. It is employed both in cooking and for lighting, and is in very general use amongst the people in the south of the Raipur district of the Central Provinces. The residue of the boiled seed is dried and pounded into a flour, and eaten with the flowers of the *Bassia latifolia*. We are indebted to our old friend Mr. Lowrie for the above facts.

The best on record beaten.—We are always glad to notice any smart work done by Forest officers, and have now to call the attention of our readers to a record-breaking achievement on the part of Mr. C. Gilbert Rogers, who arrived in this country only a year ago, and has served ever since near Darjeeling, which, every one knows, is very far from being the home of Hindustani. Having joined on 7th January, 1888, and been continuously on duty in the meanwhile, he passed on 7th and 8th November last in Hindustani both by the Lower and Higher Standards, and also "with credit" in Forest Law and in Land Revenue. Under the present system of purely provincial promotion, this smart young officer is unable to obtain the full reward which he has so well earned, for there is no permanent vacancy for him at present in Bengal in the First grade of Assistant Conservators. If one of the Burma First grade appointments, which are still going a-begging for men to fill them, could only be temporarily handed over to Bengal! Mr. Rogers was the head of the first batch of officers trained at Cooper's Hill, and was the best geologist of his year in the whole college. That he does not neglect the good old adage *mens sana in corpore sano* is proved by the fact that he was also the most athletic man in the college.

SEASONING AND PRESERVATION OF TIMBER.—The Commissioner of Agriculture, Washington, D. C., in a late bulletin says :—

"With proper after-treatment of the wood the time of felling seems not to affect its durability. Early winter felling (December) should have the preference, because less fermentable sap is then in the trees, and the timber will season with less care, more slowly, and more evenly, and before the temperature is warm enough for fermentation to set in If the wood is cut 'in the sap' it is more liable to fermentation and to the attacks of insects, and more care is necessary in seasoning; for the rapid seasoning, due to the warm, dry atmosphere, produces an outer seasoned coat which envelops an unseasoned interior liable to decay. When cut in the leaf, it is advantageous to let the trees lie full length until the leaves are thoroughly withered (two or three weeks) before cutting to size. With conifers this is a good practice at any season, and, if it can be done, all winter-felled trees should be left lying to leaf out in spring, by which most of the sap is worked out and evaporated.

"Always remove bark from felled timber to aid seasoning—but not from the standing tree.

"Never allow the log to lie directly on the moist soil.

"If winter-felled, shape the timber to size within two weeks after felling, and leave it placed on blocks—not upon the soil—in the forest; or if shaped at home, place in a dry, airy—not windy—position, away from sun and rain.

"If dried too rapidly, wood warps and splits, the cracks collect water, and the timber is then easily attacked and destroyed by rot.

"With large logs, cracking may be prevented by coating the ends with some fatty or oily substance mixed with brickdust, or covering with a piece of linen, cloth, or even paper, or by simply shading them to lessen evaporation; cracks on the sides may be filled in with tow or cotton.

"When piling timber, place laths or sticks of uniform size at uniform distances under each log, or post, or tie.

"Sufficiently thorough seasoning for most purposes is obtained in twelve to eighteen months, while for special work, according to the size, from two to ten years are required.

"The best method of obtaining proper seasoning, without costly apparatus, in a shorter time is to immerse the prepared timber in water from one to three weeks, to dissolve the fermentable matter nearest the surface. This is best done by running water—if such is not at hand, a bath may be substituted, the water of which needs frequent change. Timber so treated, like raft timber, will season more quickly and is known to be more durable.

"If practicable, the application of boiling water or steam is an advantage in leaching out the sap.

"Never apply paint or any other coating to green or unseasoned timber.

"If the wood was not well dried or seasoned, the coat will only hasten decay.

"Good coatings consist of oily or resinous substances which make a smooth coat, capable of being uniformly applied; they must cover every part, must not crack, and possess a certain amount of elasticity after drying.

"Coal tar, with or without sand, or plaster or pitch, especially if mixed with oil of turpentine and applied hot (thus penetrating more deeply) answers best. A mixture of three parts coal tar and one part clean unsalted grease, to prevent the tar from drying until it has had time to fill the minute pores, is recommended. One barrel of coal tar will cover 300 posts. Wood tar is not serviceable because it does not dry.

"Oil paints are next in value. Boiled linseed oil or any other drying vegetable—not animal—oils are used with lead or any other body (like pulverised charcoal) to give substance. Immersion in crude petroleum is also recommended.

"Charring of those parts which come in contact with the ground can be considered only as an imperfect preservative, unless a considerable layer of charcoal is formed, and, if it is not carefully done, the effect is often detrimental, as the process both weakens the timber and produces cracks, thus exposing the interior to ferments."—*Timber Trades Journal.*

LARGE SPECIMENS OF *BAMBUSA ARUNDINACEA.*—In a block of pure bamboo forest of the above species I came across several clumps, the average girth of whose individual stems was 18½ inches, and the largest ten measured 22½, 22½, 22⅜, 22⅛, 22 1/16, 21, 20¾, 20 3/16, 20½ and 19 7/16 respectively. These measurements are, I imagine, as tall as can be found anywhere for this bamboo.

ANAMALLAIS. J. G. F.-M.

THE WEATHER IN INDIA DURING OCTOBER AND NOVEMBER.—The retreat of the south-west monsoon, which takes place in Upper and Central India during September, is continued during October, when the change to cold weather conditions usually spreads to Bengal. At the same time the north-east monsoon commences on the Coromandel Coast. This change has a most important effect on the weather. During the prevalence of the south-west monsoon current, even when it is as feeble as is normally the case during October, moist winds penetrate into Northern India, and, over the head of the Bay and cyclonic storms are still formed. As soon, however, as the final retreat of the south-west current from Northern India takes place, dry winds from north-west and

north-east set in, and the area of disturbance is transferred from the north to the centre and south of the Bay. The trajectory of the cyclones is also changed, and, instead of passing northward and north-westward, the storms ordinarily travel more or less on a due westerly course.

The month of November forms a part of the transition period from the south-west monsoon to the north-east monsoon. In Northern and Central India fine bright weather with clear skies and rapidly diminishing temperature usually obtains almost without interruption during the month. In the north of the Bay of Bengal fine weather with light north-easterly winds generally prevails, but skies cloud over in that area as well as in Bengal during stormy weather in the south of the Bay. The south-westerly winds of the south-west monsoon continue to blow during the month at the entrance of the Bay. The humid air current of which these winds form a part, instead of continuing to move in the same general direction up the Bay, gradually curve round in the south and centre of the Bay, and finally advance to the Coromandel Coast districts, to which it gives humid north-east winds and frequent rain. Storms occasionally originate in this current in the Bay during the month, and usually march almost due westwards (with a very slight northing). These storms are sometimes very severe, and form one of the most important features of the month. They frequently give a deluge of rain to the narrow belt of country across which they advance, and at the same time drain away the moisture from the more distant districts. Hence the occurrence of cyclonic storms during the month is generally associated with a very irregular distribution of rainfall in the south of the Peninsula, excessive rainfall in the districts visited by the cyclonic storms usually accompanying deficient rain in the districts outside of the storm areas of the month.

In the Arabian Sea north-east monsoon winds usually set in steadily during October, and extend over the whole of it except the extreme south. Hence fine weather generally prevails in that area. Storms which form in the Bay of Bengal and cross the Peninsula, occasionally pass out into the Arabian Sea, and give stormy weather for some days to the central and northern portions of that sea.—*(Meteorological Reports).*

THE KEW FLORA INDICA.—In Part XV. of the Flora of British India, which has just been published, we notice that the Himalayan spruce fir now appears under the name of *Picea Morinda*, Link. It

seems a pity that the specific name should be *Morinda*, as in some parts of the N.-W. Himalayas, this is the vernacular name of *Abies Webbiana*. It is true that in Brandis' Forest Flora, *Morinda* is also given as one of the vernacular names of the spruce in Garhwal and Kumaun, but we doubt that this is at all general, and we venture to think that *Morinda* is more often applied to the silver fir.

We also observe that the deodar is now called *Cedrus Lebani*, Barrd., var. *Deodara*, Hook. f. There is only one species of *Cedrus* with three marked forms, a Himalayan, an Oriental, and an Algerian.

There are several other changes from the old familiar names, such as *Quercus glauca*, Thunb. for *Q. annulata*, Smith.

S.

THE FUEL SUPPLY OF DARJEELING.—We are glad to hear that complaints of the firewood supplied by the Department being wet are now a thing of the past. This happy result is due to the substitution of sale by measurement for the original system of sale by weight. We owe to the defunct system the following effort of the local Muse, inscribed on a pair of bellows :—

In Darjeeling the wood is so frightfully wet,
That the more you blow it, the hotter you get;
If you blow till your arms are beginning to tire,
The exercise warms you, but never the fire.

FERTILITY AND DEFORESTATION.—So early as the year 1540 Fernando Colon noticed that the rains in Madeira, the Azores, and the Canary Islands had become rarer since the trees were cut down, and the rain, instead of falling as heretofore in moderate showers, now comes in violent gushes with long periods of drought between. As a consequence, naturally, the soft yielding soil is gradually washed away, the hill-sides and the higher plains become barren wastes of sand and gravel, and, to quote from an eminent authority, this process has been going on in Spain, Greece, Algeria, Morocco, and in short all round the shores of the Mediterranean where this deforesting has been extensively practised, and countries which were once the granaries of the world are now little better than deserts. Many people will say this might occur from unknown causes, and might have happened all the same if the woodlands had not been interfered with, but this plea can be easily refuted, for in many of the countries above mentioned replanting has been undertaken on a large scale by com-

munities and by Governments, with the most decisive results. Wherever such attempts have been made, the climate becomes less extreme, the rainfall more uniformly distributed, and public health improved.

"All is a desert now, and bare
Where flourished once a forest fair."

I never witness, writes "Forester," in the "East Anglian Times," the felling of a tree, however insignificant, without calling to mind the lamentation of that child of Nature, the great Wizard of the North, so simply yet so graphically put forth in the distich with which I commence this warning to the agricultural Vandals who wage war to the bitter end against every tree, and fence, and twig, which for ages past have been the beauty and sylvan glory of this woodland county of Suffolk, and which were left in their entirety not so many years ago, when farmers grew double the quantity of cereals that they do in the present day, and as all the great brewers and maltsters can testify, of a far superior quality. Before we touch upon the timber proper, we will take a casual glance not at the hedgerows perhaps, but to where they were in our boyhood's days of bird's nesting and hare and hounds. What has become of the towering maple fences which baffled our predatory powers in pursuit of eggs? What has become of the impervious blackthorn and whitethorn fences which sternly denied admittance, and stopped many a bold rider in the brave days of old? Where are they now, and where are the farmers now? And echo answers, "where?"

I can remember the days when farms now producing ten coombs invariably produced as much as eighteen coombs per acre, and the headlands were not planted either. I have no hesitation in saying that one great reason for this falling off is that the land and crops are utterly unprotected from the wild and stormy blast, which gathers strength and fury by passing over a large tract of country utterly devoid of fences and trees, and so dissipating and evaporating the evanescent and volatile chlorides and carbonates of ammonia, which are the chemical results of nine-tenths of the farmyard manure, and which under a more salutary protecting influence would remain quiescent in the soil. According to this line of argument one can clearly demonstrate that nine-tenths of the farmyard manures introduced into the soil are dissipated long before their component parts can be assimilated by the crops for which they are intended, and as a natural result these crops are starved.—*Timber Trades Journal.*

THE

INDIAN FORESTER.

Vol. XV.] April, 1889. [No. 4.

EXPERIMENTS IN SILK-WORM REARING AT BERHAMPUR.

SOME highly interesting experiments in rearing silk-worms have been carried on at Berhampur, since December 1886, by Mr. Nitya Gopal Mukerji, M.A., of the Bengal Agricultural Department, who has made a most instructive tour in France and Italy for the purpose of studying the best methods of silk-production.

Mr. Mukerji has written a paper on silk-worm rearing in France and Italy, dated 9th May, 1888, and a note on the decline of the silk industry in Bengal, dated 23rd October, 1888, and it is from these notes and some other of his reports, and from a personal inspection of the work at Berhampur, as well as from information obtained from Mr. Gallois, one of the leading silk exporters in Bengal, that the facts for the following paper have been gathered, on a subject, which owing to the presence of wild silk-worms in our forests, has a certain interest for Forest Officers.

The official records show that the average annual quantity of raw silk exported from Bengal rose gradually from 972,108 lbs. between 1812-35, to 2,039,342 lbs. between 1856-70, including about half-a-million lbs. of waste silk, the export of which was only commenced in 1856, while between 1874-87 the average out-turn of raw and waste silk from Bengal fell to 1,581,860 lbs., chiefly on account of the reduced price of Bengal silk, owing to the recent largely increased production in Europe, and the reduced production of silk in Bengal from disease and other causes.

In Europe, silk production has now completely recovered from the depressed conditions which the ravages of pebrine and other diseases had occasioned, and it is to Pasteur's researches into the nature of pebrine, commenced in 1865, that the improved state of things is due.

Owing to Pasteur's discovery of the nature of the disease, and of the fact that, provided healthy eggs are available for breeding, its spread can be prevented, stations have now been established

in the silk-producing districts of France and Italy for the production of eggs free from infection, from which silk-worms are now almost exclusively reared in Europe.

This system has proved so successful that, whilst before its introduction, one ounce of eggs yielded on the average only 45 lbs. of cocoons, this return has now been increased to 72 lbs., whilst as much as 150 lbs. are occasionally harvested, and all this without very much increased consumption of leaf, of which there is much waste in rearing weakly and diseased worms.

A similar revival of silk production in Bengal can only be brought about by introducing Pasteur's system, and by placing healthy eggs within the reach of the peasantry.

This system is already established in Japan; and the Chinese Government has deputed an officer to study Sericulture at Montpellier, so that the production of raw silk is rapidly increasing and its price going down, and it is probable that the peasantry of France and Italy will soon be no longer satisfied with the meagre profits of cocoon rearing, from which they have already begun to withdraw.

Owing to the low cost of labour in Asiatic countries, the silk industry will in future depend more and more on them for the raw material, and this is so far favourable for Indian Sericulture.

During the collapse of silk-production in Europe, which for the time completely ruined the silk districts, reaching its maximum in 1868, very high prices ruled for raw silk, as much as Rs. 29 per pound having been paid, and thus the Bengal silk industry was greatly stimulated, so that mulberry planting was considerably extended in the Rajshahye and Presidency Divisions, and cocoon rearers made very large profits.

The Bengal zemindars naturally took advantage of this prosperity to raise the rent of mulberry land which they have not since reduced, in spite of the fall in the price of silk, and Mr. Gallois and other silk merchants at Berhampur assert that as high a rent as Rs. 30 an acre is now sometimes charged for such land.

The cultivators naturally prefer to have their mulberry land near their homesteads, where the leaf is not so liable to be stolen as when grown on ordinary land, and as it is customary to charge high rents for such land, there can, in this case, be no grounds for complaint against the zemindars; but if, as is maintained by Mr. Gallois, and as is admitted in a note by the Director of Agriculture, specially high rents are charged for mulberry cultivation on ordinary lands, so that as much as 50 per cent. of abatement is allowed when mulberry cultivation is given up, and *salámis* equal to

one year's rent are paid when mulberry is planted for the first time on any land; this is clearly contrary to law, which lays down that land is to be assessed for rent in accordance with the capabilities of the soil, and not according to the kind of crop grown, and that occupancy tenants are not liable to pay enhanced rent in consequence of any improvement they may make at their own expense.

In the case of mulberry plantations it is stated that, tenants incur a large initial outlay varying from Rs. 25 to Rs. 100; the crop requires annual top-dressing with 4 inches of soil dug from ditches and jhils, until it becomes raised several feet above the ordinary level of the fields; it has also to be replanted every twelve years. All these facts prove that it is an expensive crop to rear.

Mr. Mukerji, however, states that mulberry producers charge very highly for their leaf, as much as Rs. 5 per maund of 82 lbs., the cost of production being only 8 annas a maund, whilst one acre of mulberry plantation will yield 150 maunds of leaf annually, so that the rent paid is an inconsiderable factor in the question. Some benefit, however, would certainly result if Government could utilize its position in charge of many wards' estates and encourage mulberry plantation, by fixing fair rents, and also, generally, by inducing land-owners to favour the silk industry, which in Bengal is of considerable importance.

As matters stand, about one-third of the reels at the silk filatures are said to be unemployed, partly for want of cocoons, and also partly, strange to say, in a country with a population of between 500 and 600 per square mile, for want of labour; for the filatures cannot compete with the demand for ordinary agricultural labourers, as they only provide temporary work, the hands being under agreement to work from time to time, as they are required, at the monthly rate of Rs. 5 for men, and Rs. 3 for boys: the former are employed at the basins in adjusting the cocoons to the reels, and the latter merely in turning the reels, mechanical power for reeling Bengal silk having been found unsuitable, though it may be used with great advantage for the produce of annual worms.

The labour difficulty can probably be met by a slight increase in the rates of wages.

Government is liberally assisting the silk industry by scientific research, and Mr. Mukerji is doing most useful work at Berhampur; it is only fair therefore that the Bengal silk merchants should contribute a share to the expense involved in these researches, and if each filature of 100 reels were to contribute Rs. 100 per annum, a considerable fund might be raised to supplement the Government grant.

Before proceeding further, I wish to refer to an excellent work, on the annual European worm, by M. Eugéne Maillôt, Director of the Sericultural Station at Montpellier, entitled, "Leçons sur le ver à soie du Murier", and published in 1885, by Messrs. de la Haye and Legrossier, Place de l'Ecole de Médicine, Paris.

This book, which is dedicated to M. Louis Pasteur by his pupil M. Maillôt, gives a full account of the anatomy and life history of the insect, and of the methods of rearing it, and also goes into the economic conditions of silk production.

Another most comprehensive compilation on silk-worms of all species and countries, containing over 1,000 pages, has been written by Mr. Natalis Rondot, and published in 1885, second Edition 1887, by the French Government, at the Imprimerie Nationale, but as the author has no practical knowledge of the silk industry, this book is said not to be altogether reliable. A good English treatise on the various Indian silk-worms would be extremely useful, and Mr. Mukerji's education at Cirencester, and opportunities for studying silk-production, would certainly designate him for compiling such a work, could his services be spared for the purpose.

A book of this nature should give all available information regarding the different kinds of silk-worms, which are, or may be, cultivated in India.

The best of these is *Bombyx Mori*, now reared in the Punjab, Kashmir, and in Dehra Dún, and of which the best variety is the Shanghai silk-worm, now regularly bred in France and Italy.

Nine pounds of these Shanghai cocoons yield 1 lb. of raw silk, whilst the best European varieties only yield 1 lb. of raw silk from 4 lbs. of cocoons, and the former are small, hard, and of roundish shape, which is best for reeling, and are spun by a small worm which does not consume much leaf.

The Baghdad worms are also highly esteemed, although being large, they eat a great deal and are very subject to disease.

The Punjab silk-worms are now suffering badly from disease, and the recently thriving Kashmir silk industry, started by Babu Nilambur Mukerji, and which yielded a revenue of about five lakhs of Rupees to the State, is now languishing from the same cause, so that a deputation has been sent from Kashmir to Berhampur to study the possible means of combatting disease. *Bombyx textor* is the annual silk-worm of Bengal, but yields poor cocoons, though superior to those of the polyvoltine kinds, which breed eight times in the year, and of which two species are known in India, *Bombyx fortunatus*, the *desi* worm, yielding the best broods

from November to January, and *Bombyx Cræsi*, the Madrasi or hot weather worm, yielding best from March to September.

All the above-mentioned silk-worms feed on mulberry leaves, those of *Morus alba*, *multicaulis*, or *indica*, being considered equally good, while *Morus nigra* gives rough spiny leaves disagreeing with the larvæ.

Another species to be considered is the *Eri*, or castor-oil silk-worm of Assam, *Attacus Ricini*, the silk of which cannot be reeled, but is carded and spun, in much the same way as is all silk waste in Europe.

The Assam Muga silk-worm, *Antheria assama*, feeds chiefly on the foliage of the sūm tree, *Machilus odoratissima*, and of the suálu tree, *Tetranthera monopetala*. The silk of this worm can be reeled, as well as that of the common Tusser, *Antheria mylitta* of the Santal Pergunnahs, Chota Nagpur, and other parts of India, which is chiefly fed on species of Zizyphus, and when wild feeds on the foliage of the sál, *Shorea robusta*, sain, *Terminalia tomentosa*, and other trees. The wild cocoons are, however, only used as seed cocoons, as the cultivated tusser worm rapidly deteriorates. The Muga and Tusser silk-worms are reared on trees, the breeders removing them from one tree to another as they strip off their foliage, and they are protected against birds by the use of bows and pellets, and from ants by various simple devices.

As the *Quercus serrata*, the common oak of the Khasia hills, will grow luxuriantly in Dehra Dún, and might be grown elsewhere in India, and this is the tree on which the Japanese Tusser, *Antheria Yamamai*, the best of all wild worms is reared, it might be found possible to introduce this worm into India.

Mr. Mukerji gives the following classification, supplied to him by Mr. Dusuzeau, of the various silk-producing Lepidoptera :—

I. BOMBYCIDÆ.

Bombyx. Theophila. Ocinara. Trilocha. Rhondetia.

II. SATURNIDÆ.

Antheridæ (cocoons can be reeled off).
- Antheria.

Attacidæ. (cocoons, unreelable).
- Attacus.
- Actias.
- Caligula.
- Saturnia.
- Lolpa.
- Cricula.
- Collosumia.

The Bengal polyvoltine worm yield much lighter cocoons than the annual worm, containing only 200 to 250 metres of silk, against 800 to 1000 metres from the latter.

Four or five times as many Bengal cocoons are therefore required for as much silk as a given number of annual worms, and the comparative unevenness resulting from the frequent joinings of the thread, which this entails, is increased owing to breakages in winding due to the brittleness of the Bengal silk.

It is owing to these and other causes of inferiority that Bengal silk only fetches about Rs. 8 per pound, against Rs. 11 for that of the annual worm ; but it should be noted that it is the best of all silks for gloss, elasticity, and for taking black dye, and is especially noted for making black silk hats.

In spite of these qualities, Mr. Mukerji does not speak very highly of the polyvoltine species, though the Bengali caste of Punra does little else besides rearing silk-worms, and mulberry leaf is available throughout the year in Bengal, so that the rearing of polyvoltine worms will certainly be continued. It would, however, be advantageous to introduce, if possible, a good annual worm into Bengal besides the indigenous annual, *Bombyx textor*, which is seldom reared, and only yields comparatively poor cocoons, containing about one-third more silk than the best polyvoltine cocoons. The introduction of annual worms into Bengal has been attempted on and off during the last fifty years, and has always resulted in the eggs going on hatching for three or four months, instead of for as many days, but Mr. Mukerji thinks that Professor Duclaux' method of natural, or artificial hibernation, at a temperature of about 0° Centigrade, will give good results.

From numerous experiments in hatching silk-worm's eggs undertaken by Mr. Duclaux, the following rules are deduced :—

(1). *To cause the eggs of* Bombyx mori *to hatch before the normal time, one must expose them for two months to the action of cold from 10 to 20 days after laying, and then subject them to a temperature of 20° C. for eight days before they are to be hatched.*

(2). *To prevent the eggs of this silk-worm from hatching at the normal period, one must keep them at a temperature of between 15° and 20° C., exposing them to cold for three months before the intended date of hatching.*

An illustration of the necessity of cold for perfecting the embryo was afforded when some South American eggs were

imported into France in 1867-68, which crossing the Equator during the European winter, and arriving in France in May, remained unhatched till the following spring.

This effect of cold has been known for ages in Japan and China, where to secure uniform hatching, eggs of the annual worms are put into freezing water for ten minutes and then exposed during cold nights on the house tops, being kept indoors during the day time, and are thus prepared for hatching at the proper season.

In fact, the action of cold affects the formation of the silk-worms' embryo; and it is worth noting that this holds good for seeds of *Mirabilis Jalapa*, and of *Ipomea purpurea*, according to Professor Duclaux. Cold is however not required for the embryo of the polyvoltine silk-worms.

In Europe, the hatching of silk-worms' eggs is regulated artificially by refrigerating machines, or the eggs are taken up to the glaciers, unless, as at Montpellier, the natural winter temperature (0 to 4° C.) is sufficiently low for hibernating eggs. *Bombyx textor* does not require this intense hibernation, the natural cold weather temperature of Bengal about 20° C. sufficing.

M. Susani, who possesses a very large breeding establishment at Rancati near Mouza, in Lombardy, has a refrigerating chamber 20 metres long by 5 broad and 4 high, capable of holding 100,000 ounces of eggs, which is described in M. Maillôt's book.

If all the eggs contained in it were good, this quantity, at about 40,000 eggs per ounce, would, under favourable circumstances, yield about 10 million pounds of raw silk, about $\frac{1}{8}$th of the annual supply of Italy.

It is probable, if eggs were sent from the plains of Bengal to hibernate near Darjíling, that this would not allow of their being subjected to a gradually increasing temperature up to 20° C., which is requisite, if the eggs are to hatch properly.

At Mr. Cunliffe Lister's silk establishment in Dehra Dún, the eggs of *B. mori* are hibernated in the Himalayas, and Mr. Lister, who has spent upwards of £50,000 on this place, chose Dehra Dún expressly on account of its proximity to the hills, and now anticipates the complete success of his undertaking.

Mr. Lister owns the largest silk weaving mills in England at Bradford, and started his mulberry plantations at Dehra Dún in order to be independent of the markets by rearing his own cocoons, and has obtained a grant of several thousand acres of waste land on favourable terms from Government. He has also command of a good water supply for irrigating his plantations, and

sufficient water-power for a turbine to work his reels. Before he started these plantations, Government did much to encourage silk production in Dehra Dún, having built sheds for rearing cocoons, and started a large mulberry nursery, from which plants were distributed gratis to the villagers, but when Mr. Lister reduced the price he was paying for the cocoons, the villagers gave up all attempts to rear them. He has still many obstacles to contend with, as the plantations are malarious from July till October, and the mulberry plant is much injured by deer, the manager having informed me that he had shot upwards of 50 stags in one year on the plantation. As, however, half the male population of the neighbouring State of Tehri Garhwal leave their country during the cold weather and wander as religious mendicants to sell water, supposed to come from the sources of the Ganges, throughout the length and breadth of India, there ought to be no difficulty in getting sufficient cold weather labour to carry on Mr. Lister's scheme.

It appears that annual silk-worms can be artificially hatched in various ways without the aid of cold, but they must all be carried out *soon after the eggs have been laid*, and may be enumerated as follows :—

(1). Washing the eggs in hot water, and then drying them and exposing them to hatch.

(2). Brushing the eggs with an ordinary clothes brush.

(3). Passing electric sparks over the eggs.

(4). Dipping the eggs in strong nitric, sulphuric, or hydrochloric acids, and then immediately washing and drying them.

Mr. Mukerji tried all these methods successfully when at Montpellier, and found that when freshly laid eggs were immersed in hydrochloric acid for ten minutes, that the eggs thus treated hatched perfectly a fortnight after the operation.

As, however, the polyvoltine silk-worms are still largely reared in Bengal and Madras, Mr. Mukerji's experiments are now chiefly made with the object of improving them, and I will therefore give a short sketch of the chief enemies and diseases to which these insects are subject, and which greatly impede their production.

In addition to the chief diseases of the annual silk-worm, termed in French *pebrine*, *muscardine*, *flacherie*, *grasserie*, the Bengali equivalents of which are *káta*, *chuna*, *kalsira* or *pacheri*, and *rusá*, the Bengali silk-worm is attacked by a parasitic fly, provisionally named *Tachinus Bombycis*, on which Mr. James Cleghorn of Sarda,

Rajshahye, has written an interesting note, dated 7th September, 1887.

This fly may be identical with the *Uji* silk-worm fly of Japan, against the attacks of which the Government of that country is said to have discovered a remedy, the nature of which should be ascertained for the benefit of Bengali silk-producers.

At present, in order to limit the ravages of the Bengali silk-worm fly, and also on account of the scarcity of mulberry leaf, only alternate broods of the Bengal silk-worms are reared for silk in the same locality, the seed cocoons being brought from a distant rearing spot for the next brood. In this way the numerous flies, which result from any one brood, die before they can lay their eggs, as they apparently do so chiefly on silk-worms, and the next but one brood may be reared with comparative impunity.

As a precaution against the attacks of the fly, the silk-worms are reared in close rooms to the prejudice of their health.

Mr. Cleghorn, as an instance of the damage done by this pest, mentions that in two days, out of 6,400 apparently healthy cocoons, only 40 were found unpierced by the grubs of the fly, and the silk in them consequently rendered unfit for reeling.

He estimates that, if the damage done by the fly could be obviated, more than double the present outturn could be obtained, but this would certainly require a revolution in the present mode of mulberry cultivation followed in Bengal.

The female fly deposits her eggs on the Bengali silk-worm, one of which is capable of nourishing four grubs, which kill the silk-worm in five or six days, and then leave the dead body to seek a crevice in the ground, in which to form their pupa.

The fly will retain her eggs, if no silk-worm is available on which she may lay them, till they hatch, and are dropped by her in the form of grubs, and she will lay any number of eggs on exposed larvæ, if the general brood of silk-worms is protected from her.

In order to effect this object, Mr. Mukerji conducts his rearing in boxes, measuring 2′ × 2′ × 4″, and fitted all round with fine perforated zinc, or galvanized wire netting, the former being cheaper and more suitable. This system excludes the flies, and allows the doors and windows of the rearing room to be opened, so as to admit sufficient light and air for the health of the silk-worms.

As these boxes cost Rs. 2 each, it may not be possible for villagers to do their rearing in this manner, and the present

plan of the Bengalis of only rearing alternate broods, keeps down the flies to a great extent. As, however, each box yields 300 to 400 good cocoons, being the produce of a pair of moths, which would only be 40–80 if reared in the ordinary manner, it is possible that increased production may repay the initial cost of providing breeding boxes, but feeding the worms in boxes is much more laborious than on bamboo trays, the present Bengali custom, of which 16 form what is termed a *ghara.*

The greatest danger to which silk-worms are liable is *pebrine*, appearing in the form of myriads of oval and pear-shaped corpuscles in the interior of the larvæ.

No further development of these corpuscles is known, and they may be distinguished from the spores of species of *Bacillus* by containing granulations, and by their greater length, volume, and power of reflecting light vividly, and present a massive look, while vegetable spores have a dull indefinite appearance.

In the tissues of the healthy worm, a few blood corpuscles, eight times the size of the pebrine corpuscles, may be seen, and the former are so small that 40,000,000 of them might occupy the space of a cubic millimetre, and to detect them, a magnifying power of 400 to 500 diameters is required.

The corpuscles have not the reactions of cellulose, and have no motion whatever, and hence naturalists have not decided whether they are *algæ*, or animals of the order *Microsporidiæ.* M. Reichart, of Vienna, sells a very good microscope suitable for observing the corpuscles, for about Rs. 55. When worms are infected with *pebrine*, their bodies become sometimes covered with black spots, though this rarely occurs in Bengal, whilst a microscopic examination shows that every part of their body is full of pebrine corpuscles, only the silk-forming liquid being free from them, though it becomes greatly reduced in quantity.

The corpuscles are introduced into the worms through the alimentary canal, from soiled leaf, and once present, there appears to be no way of arresting the progress of the disease, as although larvæ, which only become infected after the fourth moulting, may spin perfect cocoons, yet the resulting moths are full of corpuscles, and produce diseased eggs.

Pebrine is therefore hereditary, contagious and infectious.

Infection spreads rapidly from diseased eggs, from the evacuations and exuviæ of the larvæ, whilst the dried corpuscles are conveyed by the air from place to place as sources of infection for healthy silk-worms.

(*To be continued*).

MEMORANDUM ON THE TIMBER EXPORT WORKS IN THE BASHAHR DIVISION OF THE PUNJAB.

THE works, which were commenced many years ago by Mr. Paul, of Brassey and Company, were carried on by Colonel Batchelor during the years in which he held the Bashahr Division; but they have been greatly developed and improved by Mr. G. G. Minniken, Deputy Conservator of Forests, who has been in charge of the Division for the last twelve years. The following description of the works was written after a visit of inspection made of them in October 1888.

The deodar trees are felled with the axe or saw, and are then sawn into logs of from 11 to 22 feet in length. The logs are worked down by rolling and by the use of wooden levers, in the handling of which the workmen have acquired much skill, until they reach a prepared way, such as a rolling-road, an earth-slide, or a dry wooden-slide, down which they are passed to the bank of the Sutlej. They are launched into the river during the period from June to September. A brief description of each of these works will now be given.

ROLLING-ROADS. (*Fig.* 1).

The rolling-road is employed when the slope of the hillside is moderate. Such a road is sometimes constructed round the hill immediately below the forest, so that the logs may be worked down to it from where they lie, and may then be rolled along it to the head of a slide. It is also used in places where the route of the logs on their way to the river follows the bank of a ravine, or the top of a precipice.

The road, which is from 14 to 18 feet wide, has a fall of not more than 10°. It is commenced by laying a row of large stones at (A), and above them rough logs of wood of various kinds, or brushwood, obtained by the clearance of the line of road through the forest. It is found that logs or brushwood are far preferable to stones for this purpose, as they are better able to stand the shock of the rolling timber. A coping (C) of rough stone is added at the outer edge of the roadway, and earth from the cutting is thrown down so as to give a horizontal cross section. On this, poles (P, P,) are laid like rails on a railroad, and down them the logs are slowly rolled, a few feet at a time, by means of wooden levers. Should the route lie across a small ravine or a hollow, the latter is either entirely filled up with logs, brushwood and stones, or it is bridged by a rough structure of logs with poles laid across

them, so as to form the roadway. The cost of a rolling-road is said to average about Rs. 10 per 100 running feet.

EARTH-SLIDES.

The earth-slide is simply a natural hollow or drainage channel, improved and smoothed by cutting trees, removing boulders and blasting rocks, so that logs can be worked down it endwise by the aid of levers. Sometimes, where the ground is easy, such slides are carried across a slope. The gradient should, ordinarily, be such as to avoid all chance of the logs getting out of control; but to provide for the possibility of their doing so, check-walls are erected at intervals. The fall should not, where this can be avoided, exceed 25°; if it is greater than this, the number of check-walls must be proportionally increased. In some cases the fall of the earth-slides approaches 40°; but here there are check-walls at intervals of 30 or 40 yards. Earth-slides are said to cost, on an average, about Rs. 12 per 1,000 superficial feet of ground prepared.

Check-walls. (*Fig.* 2).

At a selected point on the earth-slide, a terrace, which may be from 20 feet to 70 feet long, and from 15 feet to 30 feet wide, is cut out of the hillside. On its outer edge, a row of deodar logs (A, A, A, &c.) of some 18 feet in length, is planted perpendicularly to the direction of the slide, the logs being from 6 feet to 8 feet apart, and having about one-third of their length buried. Behind them is erected a roughly constructed wood-and-stone wall, from 10 feet to 20 feet wide at the top, and about 6 feet to 10 feet high on the inner side. The wall rests on a foundation of solid earth cut out to receive it. Sometimes the outer face of the wall is supported by a second row of logs, the spaces between them being filled up with rough poles and other pieces of wood, so as to hold the stones firmly, and thus prevent their being displaced by the shock of the falling logs. If the floor of the terrace be hard, it is usually sunk to a depth of some 4 or 5 feet, and the hollow thus formed (B) is filled with loose soil or brushwood, so as to check the fall of the logs and thus arrest them, or at any rate so as to moderate the force with which they strike the wall. The logs are then moved on by levers to the head of the next section of the earth-slide, which is usually at one end of the wall, but more rarely at its centre, an opening being left for the passage of the timber.

On very steep slopes, where check-walls are required at short intervals, it is not always possible to find places at which their foundations can be laid. In such cases, a partial check is afforded

by simply driving a row of iron jumpers or crowbars into the ground, to support a line of logs laid horizontally above them. Such obstacles, being much lower than an ordinary check-wall, must obviously be placed nearer together than would be necessary were such walls employed.

Check-walls constructed obliquely to the direction of the earth-slide, and intended to prevent the descending logs from leaving it, are constructed at points where it is feared that, owing to the conformation of the ground, they might have a tendency to break away.

Check-walls are said to cost about Rs. 2 per 100 cubic feet of walling.

Dry Wooden-Slides. (*Fig.* 3).

The dry wooden-slide (so called to distinguish it from the boarded wet slide) is usually employed when the route of the logs lies across the hill slopes, or in localities where the ground is either very rocky and difficult to clear for an earth-slide, or where it crosses over, or at the edge of, cultivated fields.

It is composed, in section, of five logs or tree tops (A, A, *b*, *b*, *c*,) so disposed as to form a roughly made trough. The two larger pieces (A, A,) lying at the outside, are about 5½ feet in girth, the inner poles being smaller. The ends of these timbers rest on a roughly made round sleeper (S), to which they are pinned down with a spike of oak-wood (*k*, *k*). The tendency of the timbers to slip forward when the slide is in use is further checked by their being hollowed out below, so as to hook themselves on to the sleeper. (*Fig.* 4). The line of timbers is prolonged by others of similar dimensions attached to them by a rough scarf-joint. (*Fig.* 5). But this is not always done. Sometimes the timbers are simply placed end-to-end, a stout picket being driven into the ground between them, so as to prevent the upper one from working forward. The sleepers rest on a rough bed of stones and wood, filling up the inequalities of the ground, and built up to the required level (*Fig.* 3).

The upper section of the Kilba slide, which is 400 feet long, has a fall of about 22°. About 30 feet below the foot of this section, and so situated as to catch the logs after they have left it, there is a hole filled with earth and brushwood, in which their fall is arrested. If the gradient of the slide were to be increased so as to give the logs a much higher velocity, a portion of the end of the slide would be made horizontal, or it might even be slightly

raised (*Fig.* 6) so as to check the fall of the log, throw it up into the air, and allow it to fall flat, instead of on its end, upon the brushwood in the hole. From the hole, the logs are worked endwise down an earth-slide, about 50 feet in length, to the head of the second or lower section of the wooden-slide. This is 300 feet long, and has a fall of from 25° to 27°. The logs fall from it into a hole, similar to that above described, and are removed thence by means of levers, down another and much longer earth-slide, to the bottom of the valley. These two short lengths of wooden-slide have been made to suit the requirements of the locality, which necessitated a considerable change of direction at the point where the upper section ends ; but such a slide might be prolonged to any required length, as the pace at which the logs travel can be checked, either by the introduction of level, or nearly level portions, by notching the poles forming the bed of the slide, or by throwing down earth upon the timbers, so as to increase the amount of friction. On the other hand, if the logs are found not to move fast enough, both they and the slide are watered, so as to reduce the friction. At the time that this slide was visited, the upper section had to be watered, but the lower section, which has a steeper fall, was worked dry. Slides with a fall of from 15° to 25° are found to answer better than those having a steeper or a lower gradient. If the fall were to be as much as 30°, exceptional precautions would have to be taken, in order to prevent the logs from moving too rapidly in it, and to stop them at its foot.

Like rolling-roads, the slides are passed over ravines or deep hollows, either by filling the latter up, at a cost of about Re. 1 per 100 cubic feet, or by bridging them with poles resting on roughly made piers or trestles. Such a bridge of 30 feet span costs about Rs. 90 ; and the total cost of an average slide, such as that above described, is about Rs. 250 per 1,000 running feet.

Blocks and Tackle.

Blocks and tackle are sometimes used for hauling logs out of hollows, or for extricating them when "jammed" between trees in the forests, or in the river.

Dams and Sluice-Gates.

Dams and sluice-gates have been tried ; but sufficient success has not yet been attained to warrant a detailed description of what has been done in this direction being here given.

General Remarks.

The felling of the trees, and their conversion into logs, is carried out in the autumn, when also the upper export works are completed, so that the taking out of the timber may be begun early in the spring. As soon as the snow has sufficiently melted to admit of this being done, the lower works are commenced, and these are completed whilst the logs are being brought down the higher roads and slides. There is no hard-and-fast system—but the works are, as they should be, made to suit each locality, rolling-roads, earth-slides with check-walls, and wooden-slides, following one another in appropriate succession, as may be suggested by changes in the nature of the ground to be passed over. The structures are of a rough and cheap kind, designed to last for the period during which they are likely to be actually required. By making use of roads and slides of this class, it has been made possible to export timber from remote and comparatively small forests, or parts of forests, which, otherwise, could not have been worked. All the arrangements are excellent, and the works reflect great credit on Mr. G. G. Minniken. It was not easy to suggest improvements; but, as fellings are undertaken in more remote localities, the system now followed must be further developed, and made to adapt itself to the greater difficulties that will there be encountered. It is probable that, in such localities, it will no longer be possible to rest the wooden slides on the ground, or even on wood-and-stone walls, as at present; but that they must be raised on trestles of strong, but rough and not too expensive a style. It is also possible that wire-ropes may be employed for the descent of steep cliffs, or to convey the logs from one side of a valley to the other on which the ground may be more favorable for the construction of roads and slides. In some cases, in order to take advantage of the best ground, the logs might perhaps be shot across a small stream or valley from a slide, if sufficient fall could safely be given to it.

Floating on the Sutlej.

The logs are launched into the Sutlej during the high floods caused by the melting of the snow on the high mountains between June and September. Above Rámpur, the bed of the river is extremely rocky; and it is difficult to float logs after the 1st October, even by the aid of gangs of men with inflated skins. Every year a number of logs remain caught by rocks in the upper reaches of the river. Below Rámpur, however, the river bed is comparatively free from rocks; and here gangs of men with inflated

skins, assisted by coolies, who roll stranded logs by means of levers into deep water, are employed from September to December in re-launching stranded timber, and passing it down to the depôt at Nihla. They are superintended by members of the Subordinate Establishment trained to the work. Throughout this portion of the river's course, many rapids, whirlpools and back-waters occur; but these are well known to the workmen, who, through long practice, have become well acquainted with the manner in which each of them is to be dealt with. In some places, it is considered better to pass a large number of logs down in a mass, so as to prevent their becoming "jammed." In such a case, the floating logs are stopped by a temporary boom, formed by laying the heaviest available logs across the head of a rapid, where the water is shallow. When a sufficient number of logs has thus been collected, the batch is guided down the easiest part of the rapid.

Collections of timber stopped by whirlpools and back-waters are, if they are very large, broken up into sections; the workmen paddling on their inflated skins, then form line behind a section, and push it steadily down until it enters a fair current of the stream. Sleepers or other scantlings are tied into roughly formed rafts, and are then either pushed or pulled out of the back-water. In other places, where branches of the river run off from the main stream, lines of logs are laid so as to guide the floating logs into the latter, and thus to prevent their getting down the side channels.

At a point some ten miles above Nihla, the river forms several such side channels; and if precautionary measures were not taken the logs might be carried a mile from the main stream, much expense being thereby caused. Here a few skin-men are sent on in advance with some logs, which they place across the entrance of the side channels, and behind which they heap up boulders, so as to prevent their being washed away. They then remain at the boom thus formed, and guide all logs reaching it into the main channel. The men employed in passing the timber down live on the banks of the river, and by long practice have become expert in this kind of work. It is probable, however, that something might yet be done in order to reduce cost, and to prevent such a large quantity of timber from being held back in the upper reaches of the river.

FRED. BAILEY, *Lieut.-Col., R.E.,*
Conservator of Forests, School Circle,
N.-W. P. and Oudh.

DEHRA DUN,
March 1889.

BAMBOOS FOR FISHING RODS.

THE following is Messrs. Hardy Brothers' report on the bamboos, (*Dendrocalamus strictus*) sent to them from the Central Provinces with a view to testing their suitability for making split-cane fishing rods :—

"We have examined the two samples of cane (*Dendrocalamus*), and find that both are for the purpose of built-cane rod-making worthless, having little fibre and being too soft in spring. When cut up and tested, they bend readily, and do not regain their straightness when released; on a greater pressure being applied they break off quite short. We consider them very much inferior to the canes we at present use."

DEHRA DUN,
9th March, 1889.

FRED. BAILEY.

THE OILS OF TURPENTINE FROM *PINUS EXCELSA* AND FROM *P. LONGIFOLIA*.

THE oils of turpentine which are obtained from different conifers agree in chemical composition, and their physical properties are also very similar. There is only one pronounced distinction, apart from scent or medicinal properties, namely, the different effect on polarized light.

We find it recorded that Bordeaux turpentine from *Pinus maritima (Pinaster)*, with a boiling point of 156° and a density of 0·877 at 0°, turns the plane of polarization to the left. The Australine, or English oil of turpentine, which comes from *Pinus australis*, boils at 156°, and has a density of 0·864 at 16°, turns the plane of polarization to the right. American oil of turpentine, derived from *P. palustris*, is also dextrogyrate.

We are now able to give the corresponding figures for the oils of turpentine from *P. excelsa* and *P. longifolia*.

Samples prepared at Dehra Dún were examined in the laboratory of the Engineering College *(Polytechnicum)* at Stuttgart, and the results are brought together in the subjoined tabular statement, kindly communicated by Dr. Zech, the Director of the College. The statement embraces six distinct physical properties of the oils, and it supports what we have said above, *viz.*, that the various oils of turpentine are very much like each other with the exception of their rotatory powers.

Pinus excelsa oil turned the plane of polarization to the right and *P. longifolia* proved neutral.

We have thus *Pinus maritima* (Pinaster) oil and the chemically pure $C_{10} H_{16}$ deflecting the plane of polarization to the *left*. *P. longifolia* oil deflecting neither to the *left* nor to the *right*, and finally the *P. australis* and *P. palustris* oils deflecting the plane of polarization to the *right*.

Physical properties of the Oils of Turpentine from Pinus excelsa *and* P. longifolia *in the Himalayas, compared with chemically pure* $C_{10} H_{16}$.

		Chemically pure $C_{10}H_{16}$.	*Pinus excelsa.*	*Pinus longifolia.*
Specific gravity at 20° (Centigrade), ...		0·863	0·863	0·867
Coefficient of expansion,	between 0° and 100°,	0·00105	...	...
	„ 0° and 20°,	...	0·00100	0·00100
Specific heat between 20° and 100°, ...		0·468	...	0·456
Boiling point (mean), ...		159·15°	157·5°	163·5°
Index of refraction-hydrogen lines,	Hα,	1·469	1·469	1·473
	Hβ,	1·479	1·479	1·476
	Hγ,	1·485	1·482	1·479
Rotation of sodium rays (polarized), ...		Left. 37·01	Right. 26·24	Nil. ...

H. WARTH.

INDIAN GUT FOR FISHING LINES.

WE are very glad to publish the following suggestions from a sporting gentleman not in the Department :—

"When at home last year I spoke to several Firms connected with the supply of fishing tackle about the gut they used, and asked why they did not get India to supply it. They were all quite surprised to hear that any was to be got in India ; and told me that they would eagerly buy up all that could be produced. Looking to the prices commanded by salmon gut in England, it seems to me, you Forest people have a chance of initiating a lucrative industry. With the Atlas and Tusser and other large silk-producing moths in India, there should be no difficulty about rearing these hardy indigenous species, and producing a gut to which the stuff got in England from the small worm in Spain would be

distinctly inferior. The process is simple enough, though, to produce strands of uniform thickness all through, would require some little ingenuity, or some special simple mechanism. At any rate, a large Department like yours, if satisfied that there was a field before it in this direction, should have no difficulty in procuring details of the methods and mechanism now obtaining in Spain, where alone Farlow, Bowness and others told me their fishing gut is made at present. I know the fishing tackle shops charge any price they like for heavy salmon gut, and the Tusser and Atlas moths would yield a gut twice as thick as any that the small Spanish silk-worms possibly could. They feed on ordinary jungle leaves, and would not need any special culture.

"It seems to me the idea is worth taking up."

MHOW. J. H.

INSTRUCTION IN BOTANY AT THE FOREST SCHOOL, DEHRA DUN.

THE necessity for a course of Vegetable Morphology and Physiology to precede that of Sylviculture is so well established that, the suggestion in the March Number of the "Indian Forester," in a review of last year's Annual Report of the Forest School, to abolish the former course, in favour of Systematic Botany, might be allowed to waste its sweetness on the desert air, were it not for the support the review has received from the Editor of the "Indian Forester," in publishing it in the form of an editorial, and expressing his general approval of the opinions and comments of the writer.

We are also informed that the reviewer has studied with distinguished success at a European Forest School, and has made himself personally conversant with the most recent systems of teaching pursued at Nancy, and at several of the German Forest Schools, so that, in spite of the reactionary nature of his opinions, which will certainly find few supporters amongst Indian Forest officers, I have thought it necessary to say something in favour of the system of Botany instruction hitherto followed at Dehra Dún.

The writer of the review considers the Dehra Dún Forest School merely as one for Rangers, for whom an ambitious programme of study is unnecessary.

It is none the less true that, during the last eight years, a number of Sub-Assistant Conservators of Forests have been trained at

the Forest School, some of whom have now been promoted to the Controlling Staff of the department, whilst many of the Rangers and Foresters, who come up to the School, are very intelligent young men fully able to follow the course as it is now given.

I maintain therefore, that, it cannot be other than a fatal error for the Imperial Forest School of India, to rely merely on empirical teaching, to which it must degenerate, if the Forestry course is not based on a sufficient knowledge of the structure and vital conditions of plants. That the Botany taught at the School is not beyond the better class of students has been proved over and over again, at the Final Examinations, and the seven students referred to by your reviewer, who were, however, only kept back for three months and not for a whole year, as he has stated, all passed in Botany and failed in Forestry.

Sir Dietrich Brandis has always supported the present system of botanical instruction at Dehra, and has presented the School with a most splendid set of morphological diagrams to illustrate the lectures on the structure of plants. Dr. Schlich, Mr. Ribbentrop and Colonel Bailey have also approved of the study of morphology and physiology at the Forest School, and Mr. Mann, Mr. Whittall and other officers who attended the Forest Conference, at Dehra, in 1886, were kind enough to express their complete approval of the course which was then in progress in the above subjects. I am not therefore afraid that it will succumb to an anonymous attack from one who has not attended a single lecture in the course, even when supported by the Editorial prestige of the "Indian Forester."

Under these circumstances, it is the more to be regretted that the reviewer has allowed the European forest world to note what retrograde ideas may still be held by an experienced Forest officer, for I feel certain that every one of the Forest Schools, which he has recently visited in Europe, has adopted Vegetable Morphology and Physiology as the basis of its teaching, and Systematic Botany merely as an accessory subject, more ornamental than really indispensable for Forest officers.

That the latter subject is not neglected at Dehra is evident from the reviewer's expressed opinion that, "*it appears to cover a sufficiently wide field to make the morphology and physiology unnecessary.*"

Now, what are vegetable morphology and physiology, but the science of the structure of plants, and of the causes of their vitality and decay, and unless these are thoroughly investigated, on what possible scientific basis, can the instruction in Sylviculture be

reared? Sylviculture is the science of the mode and conditions of growth of forest plants in masses, and unless it be preceded by a similar study for individual plants, I fail to see how it can be other than empirical.

It is almost inconceivable that any intelligent well-wisher of Indian Forestry can have been so misled, as the reviewer of the Forest School report, but the fact is that, the Botanical School of McNab, Bower, Vines, and of Marshall Ward has only been recently established in England, and, as appeared in Mr. Thyselton Dyer's inaugural address to the Section of Biology, at the last meeting of the British Association, this school is not yet very favorably regarded by English Systematic Botanists, who under the stimulus of the rich herbarium collections, which pour into Kew from all parts of the world, cannot understand that a Botanist might be devoted to any other branch of the science, besides that of fixing the exact place each species is to occupy in the world's great catalogue of plants, and its nomenclature.

Meanwhile, German morphologists and physiologists have almost monopolised the field of study of the structure and life history of plants, and in the English language, except for McNab's little book, and an American book referred to further on, only translations of German works, on these subjects, are available.

An Indian Forest officer, and botanist, nurtured in the Kew traditions, and dazzled by the vast profusion of Indian forest species, the collection and naming of which occupy all the time he can spare from his official duties, may be forgiven if he has, through inadvertence, underrated the importance of the sole basis, on which Botany and Forestry can stand.

I am afraid, however, that European critics of his opinions, who do not recognize the engrossing nature of Indian official duties, will not afford him the excuse for his retrograde notions, which we in India, are ready enough to do.

The terms *sclerotic cells* and *collenchyma*, which he considers beyond the scope of Forest Rangers, are no more difficult to understand, when properly explained, than *campylotropous ovule* and *quadrilocular anther*, which terms must be familiar to every systematic botanist, whilst every flora bristles with technical terms, as uncouth as these.

I have taught Vegetable Morphology and Physiology at Dehra, continuously since 1881, and a rough note-book of my lectures has been published, and may be obtained from the Librarian of the Forest School, and although this note-book contains no diagrams, with which my lectures have always been copiously illustrated, as

well as by living specimens and microscopic sections of plants from the Forest School garden, and by specimens of wood, bark and fibres from the School Museum, yet, after a perusal of it, I believe that no one could imagine a study of vegetable morphology not to be essential for the progress of Indian Forestry. I have also included an account of the causes of disease in plants, in my course of lectures.

I have not yet published my physiological notes, as the subject is more general than morphology, and does not require local illustrations, and an excellent physiological Class-book is available, in Vol. II. of Asa Grey's Botanical text-book, by Goodall, 6th edition.

In the case of morphology, it was necessary specially to study the structure of Indian plants, and I could find no class book, except my own notes, suitable for Indian forest students.

The writer of the review is satisfied with the scope of the present course of systematic botany, at the Forest School, but hopes that every Forest Ranger may be able to use a Forest Flora, to identify the plants in his forests.

As a matter of fact, it is very difficult to identify plants accurately, whilst nothing can be easier than to collect and dry specimens, and forward them to a professional botanist for determination. Except for Brandis' Forest Flora of Northern India, which I believe costs Rs. 11, I am not aware that the vast floras of Indian Provinces, such as Assam, Bengal, Madras, Bombay, or Burma, have as yet been described in local floras, which are within the means of Forest Rangers, who cannot certainly afford to buy the highly expensive Flora Indica, which is really indispensable for every Indian Systematic Botanist.

DARJEELING: 16*th March*, 1889. } W. R. FISHER.

THE OFFICIAL POSITION OF SUB-ASSISTANT CONSERVATORS.

WILL you kindly permit me to enquire, through the medium of your widely-read journal, what the exact position of a Sub-Assistant Conservator of Forests in the Department is? So various are the treatments received by Sub-Assistants here, that it is most difficult, if not altogether impossible, to make out anything from them. The treatment varies in the different circles and even in one and the same circle, according to the pleasure of the superior and the Controlling Officer. Perhaps it will not be out of place, if I say what, in my opinion, the Sub-Assistant's position is. Your readers

will, I hope, correct me where I am wrong, and add to what I have not sufficiently stated. I consider the Sub-Assistant as a subordinate officer, in independent charge of his office (consisting in this Presidency, of a clerk and two peons, at the least), and as the *assistant* of the Assistant or Deputy Conservator under whom he may be serving. As such, his duty is to carry out the orders of his immediate superior to the best of his ability and with perfect freedom and independence. Should he unfortunately hold different views from his immediate superior, he should be entitled to represent those views through his Divisional Officer to the Conservator. That officer, *after hearing* what the Sub-Assistant and the Divisional Forest Officer respectively have to say, would then decide every question finally. Moreover, the Divisional Forest Officer, under whom the Sub-Assistant may be placed, should treat him with due consideration, *offer him a chair* when he goes to see him, and should in short deal with him in the self-same spirit in which he himself would desire to be dealt with by his own superiors.

Before I proceed further I hope you or any of your readers will kindly let me know if I have correctly stated the case so far, and I shall feel highly obliged if you will kindly let me know, what you think the exact position of a Sub-Assistant in the Department is.

BOMBAY. A SUB-ASSISTANT.

NOTE.—We do not wish to appear either as judge or advocate in this case, which to us seems simple enough. The official position of a Sub-Assistant Conservator is clearly defined by the charge he holds. Under the Government of India a Sub-Assistant performs the same duties as a Junior Assistant Conservator, and in some instances, where the Division is unavoidably small or unimportant, even administers a Division. Hence his official rights, powers and privileges are *pro tanto* the same as those of a Junior Assistant or a Divisional Officer, as the case may be. As to his not being offered a chair at all official meetings with his Divisional Officer, we trust that there are no superior officers of the Department who have so little respect for their own cloth as to offer this indignity to native gentlemen holding the important post of Sub-Assistant Conservator in the Forest hierarchy. We are not discussing here the vexed question of social intercourse, but regard the matter from a purely official point of view. We must, in fairness to ourselves, also say, that in making the preceding remarks, it has been as far as possible from our intention to advance anything in favour of recalcitrant subordinates, be they Sub-Assistants or Assistant Conservators or Deputy Conservators. The extent to which an officer receives a free hand in the conduct of his duties depends entirely on his own merits, on the confidence which his abilities, industry, zeal, honesty and judgment have been able to inspire in his Chief, and is quite independent of his official or social position. Merit may not always meet with its due reward in the shape of promotion, but it will never fail to win recognition in the shape of confidence on the part of one's official superior.—[ED.]

FOREST FIRES AND POPULAR CUSTOMS.

A CURIOUS cause of jungle fire, or rather case of native customs conducing thereto, has recently come to my notice. In this District (Ganjam) the aborigines are the well-known Khonds. This tribe lives principally in the hills, but they also in places extend down into the plains, where alone our reserved forests are situated, our Forest Act not applying to the hills. Now one of the customs of the Khonds is to hold annually in the hot weather a great hunt, and those who return from this hunt empty-handed are subject to be scoffed at by their womenkind, and to contemptuous treatment at their hands, such as having water mixed with cowdung thrown into their faces, and so on. Every effort is therefore made by those who fear to incur the contempt of the fair sex, to insure themselves against failure, and as standing grass impedes the view and offers too much cover for game, while dead leaves are an effectual bar to silent stalking, the forests are purposely fired by these would-be Nimrods.

A. W. L.

FORESTRY IN HUNGARY.

(*Continued from page 101*).

BUSTYAHAZA.

Leaving the house the next morning on horseback, we followed the forest road, beside the stream leading up the valley. At first, our route lay through a forest of pure spruce, which clothes the hills in dense masses on either side ; but further on we met with the mountain-ash, the maple (*Acer pseudo-platanus*), the willow (*Salix caprea*), and higher still, in the marshy ground, the alder (*Alnus alpina*). The scenery was lovely, and the path was covered with the tracks of red deer, which abound in these forests, the shooting being reserved for the royal family. Arrived at the head of the Tisza valley, we crossed the ridge (3,946 feet) into the valley of the Tarácz and the conservatorship of Bustyaháza, and were met by the officer in charge of the Forest Division we were entering. On our way down, a portion of an area of 9 square miles of spruce forest was pointed out to us as having been completely destroyed by insects (*Bostrichus typographus*) in 1862 ; and we then passed through a forest where, six years ago, the large beech trees, then standing over the young spruce, were cut out ; the latter are now making most satisfactory progress. There are

a great many petroleum wells on the northern slopes of the Carpathians, in Galicia; and search, which has proved fairly successful, is now being made for oil on the Hungarian side.

We continued to descend the valley until we reached the Turbat reservoir, the construction of which occupied six months, and cost £960. It contains 8½ million cubic feet of water. The dam is 36 feet high, 170 feet long, and is furnished with a sluice gate, which a single workman can easily open and close by means of a lever. This system, which is a new one, has answered so well that it will now be adopted in all new works. The timber from these forests is floated, a distance of 93 miles, down the Tarácz to its junction with the Tisza, six reservoirs being provided, all in the upper portion of the valley. The highest of these is at Turbat; and the others, which are constructed in side valleys, are used to afford the needful depth of water further down, where the bed becomes wider. The first raft is not let go at Turbat until the reservoir has been opened for one hour. The time allowed at Hoverla was half an hour only; but there the slope was only 1·20 per 100, whereas here it is from 8 to 10 per 100; consequently, as the rafts go faster than the water, a longer time is required to elapse before the first raft is let go. The bed is very rocky, and the floating work is both difficult and dangerous, scarcely a year passing without loss of life by one or more of the men employed on it. The starting of the rafts is a remarkable sight. They are moored to the bank; and when all is ready the men stand, almost naked, upon them. Suddenly the expected sound of the rushing water reaches them from above, when all cross themselves and fall on their knees in prayer. The forester holds his watch, and when time is up he gives the word; the crew of the first raft then spring up, seize their axes, and out away the moorings, the raft being at once carried down on its perilous voyage. Then, after the proper interval, the word is given to the second raft, and so on till all have been despatched. The reservoir empties itself in from 6 to 8 hours, and the water, which increases the depth of the stream by 40 inches, is sufficient to carry down from 30 to 40 rafts. If the reservoirs in the side valley are also made use of, 100 rafts can be sent down. Between 5 A.M. and 6 P.M. of the first day, they go 60 miles, and the remaining 33 miles of the journey are accomplished the second day, when, the fall being less, the rafts travel much more slowly. During the melting of the snow in spring, the reservoir fills itself in three days; but in the dry weather, seven days are required. When we were there it was opened twice a week.

The trees in these forests are larger than those in the Tisza val-

ley, the rafts being usually composed of twelve stems, 60 feet long, with a mean diameter of from 18 to 26 inches; but we did not see trees of remarkably large size in any part of the Carpathian forests. Where the slope is very steep and rocky, river slides of the kind previously described have been made; and, provided that the rafts are kept sufficiently far apart, they pass down these without much difficulty. At bends, where they are likely to come in contact with the sides of the stream, the latter are rivetted with logs, so as to present a comparatively smooth and even surface to the rafts, and thus prevent their being checked in their course. The trees are brought down to the river bank during the winter, on sledges running over the snow, the cost, including barking and logging, being about $\frac{8}{10}$ths of a penny per cubic foot; the cost of floating the timber down the 93 miles of river is only $\frac{3}{10}$ths of a penny per cubic foot.

We stopped to inspect some rafts in process of construction, and noticed that the system adopted differs, in some respects, from that in vogue on the Tisza. Here a pole is laid across the stream, and on it the small ends of the logs are placed, and held together by means of a half-round cross-piece, countersunk into their upper surface, and pegged down to each of them. At a short distance behind this, a withe passes across the raft, and is attached to each log by a forked peg, which grasps it. A similar withe at the rear end of the raft is attached to the butt ends of the outside and some of the intermediate logs.

We stopped for breakfast at the new forest house at Turbacziel the stream passing which is full of good-sized trout. Magnificent forests clothed the hills on all sides; they have been a good deal damaged by wind, but there was a very fair show of young self-sown seedlings, where the conditions were favourable.

After leaving Turbacziel, we passed a large river slide with its floating platform; it is 670 feet long, has an average fall of 14 in 100, and its construction cost £240. Below this point, the bed is very bad in many places, the slope being so steep, and the numerous bends so sharp, that one can hardly imagine it possible to float rafts over it, even by the aid of the artificial flood produced when the reservoirs are opened. A little further on, the Bertyánka stream joins the one we were following, and the two go on together under the name of the Tereszulka. In this neighbourhood, there are a great many earth-slides and dry-slides of round timber, one, of which passes across the river; but, unfortunately, none of these were in use when we were there. On nearing Brusztura, we were shown another river slide, the passage of which forms the most

dangerous part of the floating route in this part of the hills; and we then drove into the village, where we were most courteously and hospitably received by the Conservator, M. Kellner, who entertained us at dinner, and then drove us to Kiralymezö, where we were to sleep, and where, to our great regret, M. Halazy left us. The next day was not one on which, in the ordinary course of work, floating would go on; but the Conservator very kindly ordered some of the reservoirs to be opened, so that we might have an opportunity of witnessing the passage of the rafts down the Brusztura slide. He also gave orders for the opening of other reservoirs on the following day, in order that we might perform a part of our journey to Taraczkös on one of the timber rafts. Before reaching our halting place, we had travelled over 34 miles of road since the morning.

Next day, on leaving the house, we noticed that the alluvial banks of the Tarácz were protected by revetments, from which the projecting tops of tree-branches stood out, to break the shock caused by the rafts striking against them. We drove up a side valley, in a north-westerly direction, to Nemet Mokra, to the house of M. Ritter, a Forest officer, who kindly conducted us over a most interesting settlement there. We were told that, 110 years ago, twelve families of German workmen from the Black Forest marched here with a banner borne before them, and settled. They were welcomed by the Hungarian Government, and granted certain privileges, which they still possess. Their descendants are given free sites for building their houses, which, however, they have not the power to sell; and the State provides a church and school, paying the priest and school-master. The men are principally employed on forest engineering work, including slides and the revetment of river banks; but they are excellent and very skilful workmen, who can turn their hands to almost anything, and they receive good wages and pensions. There are now sixty-three families, in each of which there are, on an average, eight children; they still speak German, and do not intermarry with other races. We visited one of their houses, and found it most remarkably clean, comfortable, and well arranged. There were five rooms on the ground floor, and an attic above. The rooms were furnished with wardrobes, in which the clothes and spare bedding, which are collected for the daughters on their marriage, were stored; and the clean white-washed walls were adorned with a clock and pictures. We also visited a second house, which, if not quite so comfortable as the first, was equally clean; and it was evident that the settlers were prosperous, happy and contented. On Sundays they put on a picturesque holiday.

attire, but, unfortunately, we had no opportunity of seeing it. The priest took us over the church, which is beautifully kept, and showed us the original silken banner brought from Germany by the first settlers.

We then retraced our steps to the river slide, near Brusztura, and awaited the arrival of the rafts. The total length of this work is 270 feet; it is 30 feet wide, and has a fall of 15 in 100—two floating tables, one in front of the other, being attached to the lower extremity, to receive the descending rafts. This slide is dangerous, and its navigation exceptionally difficult on account of its steep slope and curved form. Soon after our arrival, the flood caused by the opening of the reservoir commenced, and presently the first raft, manned by six men, appeared. It was carefully steered by means of two oars in front and one behind, so as to enter the slide at the inner side of the curve; and, dashing down with frightful rapidity, was safely landed upon the floating tables, and thence launched out into the natural current on the outer side of the curve. It did not come into contact with the sides of the slide until it reached the second table. It was a really splendid sight. The men, who were drenched to the skin, had to keep their wits about them, and maintain their footing on the slippery logs, or they would certainly have been killed. They wore, strapped under their feet, the spiked clogs, without which they are not allowed to attempt the descent.

On the morning of the 8th, we started at 5 A.M., and drove two miles down stream, where we found a raft, fitted up in the most luxurious manner, awaiting us. Accompanied by the Conservator and M. de Lavotta, we went on board at once, and after saying good-bye to the other kind friends who had escorted us thus far, we weighed anchor, and commenced our voyage of 16 miles, which distance we covered in about three hours. The passage down the river was most enjoyable, the scenery being beautiful, and no formidable difficulties being encountered. On landing at Dombó, which is largely composed of thatched houses, built and inhabited by Jews, we drove to Taraczkös, halting midway to inspect the forest railway line which was in process of construction, over a distance of 14 miles, to that place. We then left by train for Kássa, where we arrived late at night.

(*To be continued*).

II. Review.

THE ITALIAN LAW OF 1st APRIL, 1888, ON REBOISEMENT.

The necessity of State interference in the management of private forest property has led to the promulgation of a new Law in Italy on the reboisement of devastated private forests situated in mountainous districts, and on the consolidation of unstable hill-sides.

We give below a translation of the Law in question, as the matter is one of special interest for us in India, where the measures as yet devised for the protection, in the interests of the community at large, of forests situated on private land have entirely failed.

Few will, we think, deny that where the destruction of forest property causes actual harm, beyond the boundaries of such property, to people who have no voice in its administration, the management resulting in such destruction becomes inadmissible in the general interests of society, and should consequently be regulated by the Laws of the country. This seems a sufficiently obvious theory, and one which has been more or less generally accepted. Nevertheless attempts at practical legislation on this question have always encountered considerable difficulties, and have almost invariably ended in failure and in constant futile tinkering of the Law. In some countries the legislation in the matter has been hesitating; the original laws, from having been too lax and general, have been modified time after time in consequence of political pressure. In other countries, again, the authorities have insisted on the conservative treatment and maintenance of private forests solely for the convenience of the surrounding population, without any thought to the convenience or interests of the proprietor, and sometimes even for no better reason than that the forests were in existence when the Law came into force. Such interference was, without doubt, a vexatious subordination of private interests to general convenience; but, on the other hand, the countries which had adopted these more stringent measures at the outset, only gradually to relax them as the necessity was proved, were thereby spared no end of trouble and money.

In France, as in Italy, where the milder and hesitating policy was originally adopted, it has since been found necessary to pass separate and, as the event has proved, more or less ineffective Laws for the re-wooding and re-grassing of devastated forest areas, and to spend millions sterling on the replanting of barren hill-sides,

the consolidation of unstable slopes and the regulation of destructive torrents.

It is of course quite another thing to prohibit the destruction of existing private forests when such destruction causes injury to a third party and threatens the public weal; and a Law insisting under such circumstances on a proper and reasonable management of those forests, is sure to find overwhelming support against the opposition offered by vested interests. The question, however, assumes a different aspect when the State demands from a private proprietor that, in the interests of the public weal, he shall not merely forego the free and uncontrolled management of his own property, but that he shall even repair the mischief done by the previous mismanagement and misuse of his forest, though at the time in question there was nothing in the written laws of his country to prevent him from acting as he did.

Various attempts to secure this repair of past mischief by means of legislation have been made both in France and Italy, but the private individuals concerned could never be brought to believe in the disinterestedness of the State, and hence refused to give the necessary money and labour for such work. As yet no Law has been passed which has realized the intention of the legislator to any appreciable extent, and the cost of re-wooding and consolidating barren hill-sides bereft of their original covering of forest by the ruthless axe of the speculator, or, as more frequently happens, by the slow but sure action of continued mismanagement and excessive grazing, has almost invariably been a burden on the revenues of the State.

The new Italian Law on reboisement is, without doubt, an improvement on all its predecessors, but this is only in so far as it simplifies procedure, for its provisions, like those of the French Act of 1882 on the same subject, require the expropriation by the State of all such private property as the owner refuses to improve in the interests of the general public. The difficulty still remains unsolved of persuading the private proprietor and the right-holder to devote money and labour on improvements, the fruits of which, as regards themselves, can only be reaped in a remote future, while the means which the State can make available for this purpose are naturally limited.

The difficulties that have already proved a stumbling-block to the French and Italian legislators, already loom before the Indian Administration in all their portentious magnitude, which must grow as we delay to replace the present unworkable section of our Forest Acts by a Comprehensive Law on the subject of private forests.

The Italian Law of the 1st March, 1888, on Reafforestation, (Summary Translation).

1. The Minister of Agriculture, &c., shall provide for the reafforestation and the fixation of the soil of lands in mountainous regions, so as to prevent denudation of their land and to regulate the water-courses in the principal basins or portions of them. The Minister shall, also, provide for the reafforestation of uncultivated sand dunes along the sea-shore.

2. The Minister of Agriculture, &c., in consultation with the Minister of Public Works, shall cause a statement to be prepared showing the lands, commencing with those in which reafforestation is most urgently needed, which are to be reafforested, together with a summary estimate of their value, plans and estimates of the works required, including all the necessary details regarding the method of executing these works and their cost; also the measures to be taken, and the expenditure required, to insure the preservation of the areas taken in hand after these have been reafforested.

These statements, reports, plans and estimates, on being approved by the Provincial Committee, the Forest Council and the Superior Council for Public Works, and sanctioned by the Minister of Agriculture, shall be forwarded to the *Communes* in which the lands are situated, where, within the period of one month, they shall be publicly posted up, and those concerned shall be informed of their publication by means of notices delivered at their residences by the Communal Notice-server.

3. Within three months from the date of the issue of the above notification, any person concerned may present an appeal to the Forest Committee of the Province.

The Committee shall state its opinion regarding such appeals and demands for the alteration of the proposed scheme.

The Minister of Agriculture, &c., after having consulted the Forest Council and the Superior Council for Public Works, shall pass orders regarding these appeals, and sanction the final statements showing the lands to be afforested, which statements shall then be published.

4. From the date on which the notification of the ministerial sanction of the above statements shall be communicated to those concerned by the Communal Notice-server, the lands included in those statements shall, if this has not already been done, be subjected to the forest treatment prescribed by the Law of the 20th June, 1877.

5. Within one month from the date of publication of the final

statements, the owners and other persons having any share in, or rights over, the lands, shall be individually summoned by the "*Prefêt*" to say, whether they will join in becoming partners in an Association for the execution of the works of reafforestation and of fixation of the soil.

Should proprietors and right-holders of lands, amounting in extent to not less than three-fifths of the total area, and in value to not less than one-half the amount of the regular assessment, or should no such assessment exist, to one-half of the summary assessment mentioned in Section 2, decide to unite in forming an Association, such Association shall, thereby, be constituted, and the provisions of Sections 3, 4, 5 and 6 of the Law of the 29th May, 1873, (No. 1387, 2nd Series,) and of Section 7 of the original text of the Law on Irrigation Associations, sanctioned by the Royal Decree of the 28th February, 1886, (No. 3732, 3rd Series,) shall be applicable to it.

Should the proprietors and right-holders not agree, this shall be considered as equivalent to a vote against the formation of such Association.

The deeds relating to the constitution and formation of the Association, and the deeds subsequently drawn up during the duration of the Association for the execution of the works of reafforestation and for the expropriations, alienations and withdrawals connected with these works, mentioned in Sections 6, 10 and 17 of this Law, shall be subject to a registration fee of 10 francs only, except when, according to the Law, the fee is less.

6. Proprietors not joining the Association shall be at liberty, so far as regards their own lands, to carry out, *themselves*, the works prescribed for these lands within the period and according to the prescriptions of the plan, and to join the Association in contributing towards the cost of works of *general* interest. The owners of lands which are already fixed, or which they have rendered and maintain fixed, and owners of lands which are protected and maintained by embankments, or which are cultivated according to the provisions of Section 3 of the Forest Law, shall not be obliged to reafforest their lands. Such persons shall however, contribute, equally with members of the Association towards the cost of works of general utility.

The owners of lands included in the list of the Association for the reafforestation shall contribute towards the cost of the works proportionately to a tax distributed over the whole area belonging to the Association according to such rates as may be prescribed in the deed constituting the Association. When this rate is not laid down in the deed constituting the Association, the distribution of

the expenses shall be based for urban lands, on the principal tax for constructions, and for rural lands on the value of the assessment made according to the Law of 1st March, 1886, or, if this assessment has not been completed, the value of the assessment mentioned in Section 2 of the Law.

The amounts to be contributed by proprietors towards the works of general utility referred to in the preceding Section shall be determined in the same manner.

8. The deed constituting the Association shall be submitted for the sanction of Government.

When this sanction is accorded, the State will contribute two-fifths of the cost of the work of reafforestation and of fixation carried out by the Association.

The payment of the contribution will be made from time to time as the works are completed.

9. When the works of reafforestation and fixation are completed, and a completion report has been made by a Commission appointed by the Minister of Agriculture, the owners of the lands belonging to the Association shall decide the amount that will be required for the preservation and maintenance of the works which have been executed.

10. The Associations can obtain from the Government Land Banks loans or advances, amounting in the aggregate to three-fourths of the estimated value of the lands included in the Association, by giving up their mortgage on those lands, and in all other ways conforming with the provisions of the Law regarding such loans, sanctioned by Royal Decree of the 22nd February, 1885.

11. Should the Associations fail to carry out the prescribed works, or fail to carry them out in the manner and within the period prescribed in the project, the Minister may, under the Law of 25th June, 1865, expropriate the lands included within the area to be reafforested.

12. Should no Association be formed, the Minister may, under the same Law, expropriate the lands included within the area to be reafforested or consolidated.

13. Should any of the owners of the lands, to which the two preceding Sections relate, wish to retain the ownership of those lands, they should, within one month from the date of receiving the prescribed notice, sign a declaration undertaking—

(*a*). To carry out, at their own expense, and within the time laid down in the project for the reafforestation, the works which are to be undertaken on their lands, and to pay whatever share may be fixed by the Forest Administration of the cost of works of general utility.

(*b*). To comply with the rules of culture and methods of forest conservation, sanctioned by the Minister of Agriculture in consultation with the Forest Council.

14. The Government shall contribute up to two-fifths of the cost of the prescribed works of reafforestation or of fixation described in Sections 6 and 13. The provision of Section 10 is extended to private owners who carry out on their own lands works prescribed under this Law.

15. Government may, under the Law of the 25th June, 1865, after having notified the non-execution of the contract, expropriate the lands of owners who fail to carry out works in accordance with the provisions of Section 13.

16. Expropriated lands may, under a Royal Decree, be sold before or after reafforestation or fixation, subject, however, to the condition of their being maintained under the forest *régime*.

17. The owners of land expropriated under the provisions of the preceding Sections have the right, within five years following the completion of the works of reafforestation or of fixation, to repurchase such of their lands as have not been alienated under the preceding Section on repaying the cost of the expropriation and expenditure on the works of reafforestation and fixation with interest.

The Minister of Agriculture may sanction this repayment being made by instalments of not less than one-tenth, including interest.

18. No works of cultural improvement, fellings or other forest operations, can be undertaken, or grazing be permitted, in lands reafforested or consolidated under this Law, whether by means of Associations, or by private owners or by Government, except in accordance with the plans for cultural operations and for conservation prepared by the Forest Administration, and sanctioned by the Minister of Agriculture in consultation with the Forest Council.

19. Government may grant compensation to the owners or right-holders of mountain lands brought under forest treatment, on condition that they exclude, during a certain period, one or several classes of animals from grazing in those lands, and that they comply with the provisions of the preceding Section as regards the plan of cultural operations.

20. The money necessary for carrying out this Law shall be included each year in the budget returns of the Department of Agriculture. Along with these returns a report shall be submitted showing the money expended on, and the results obtained from, the reafforestations made under this Law.

ROME, *1st March, 1888.* (*Signed*) HUMBERT.

III NOTES, QUERIES AND EXTRACTS.

THE LATE MR. WOOLDRIDGE.—The *Mail* of the 9th instant records the death from sun-stroke, ten days before, of Hood Linzee Wooldridge, Deputy Conservator of Forests, 'deeply regretted.' So he is in much more than the usual meaning of the words. There are few Madras men that have not met Wooldridge ; all who have will bear a kindly remembrance of him ; wherever old South Arcot men congregated his name used to call up pleasant memories of station life, and tent companionship, of a morning run, and a sleepy rubber. We had come to call him 'old' Wooldridge, not from age, but from the patriarchal character that one ought to obtain after a service of nearly twenty years in one district, others going and coming now so rapidly ; and if we smiled at his quaint ways and his want of warm love of the Governmental stationery, we recognised and honoured the sterling uprightness of his character and outdoor works, enjoyed his quiet humour and good fellowship on land and water, and had sympathy with his love of dogs, horses, children, and whatever grew or was found in the jungle and forest. He knew South Arcot within its four corners. The Forest Department is much the poorer by his loss. Scorning soft ways and careless of a fine constitution, he is one more example of the vengeance this climate takes for defiance of its powers. The furlough he had long ago earned and talked yearly of taking, but never took, has now been granted him, but his soft voice and cheery manner stay with us ; and when our *vale in æternum* is said, may it be with as much sorrow and regard.—(*Madras Mail.*)

THE BRANDIS PRIZE.—The Committee for adjudging this prize in 1889, will consist of Colonel Bailey, R.E., Director of the Forest School, Mr. Dansey, Conservator of Forests, Berar, and Mr. Fernandez, Deputy Director of the Forest School.

NOTES FROM ASSAM.—The Inspector General of Forests has been greatly pleased with his inspection of the *Ficus elastica* plantations. They are a success beyond expectation, and the wonder is that Mr. Mann has kept so quiet about them. Evidently Mr. Mann does not know how to blow his own trumpet. The great difference between the growth of sál in the frosty climate and hot winds of the North-Western Provinces, Oudh and the Central Provinces, and in the mild forcing climate of Assam has also struck the Inspector General. Foresters in those Provinces should not omit the first opportunity they have of visiting the splendid sál forests of the Assam Valley.

A CORRECTION.—In our article on the Dandot colliery, printed in our March issue, we omitted by oversight to insert the words "in 1887" after the words "Kheorah Railway Station" on page 101. This correction is due in justice to the authorities working the mine.

MAINPHAL (*RANDIA DUMETORUM*, LAM).—Brandis states that the unripe fruit of this shrub is "bruised, pounded, and used to poison fish." I noticed the other day another use that is made of the unripe fruit, bruised and pounded, and that is to wash clothes with instead of soap. This use seems very common in the Dehra Dún, and cannot improve the water in the streams when used for drinking purposes.

EFFECTS OF SMOKE ON PINE NEEDLES.—M. Riedel, Oberförster at Landstuhl in the Palatinate, addressed to the Academy of Eberswald last year a communication concerning a plantation of Scotch fir from thirteen to fourteen years old that had been damaged in July by the smoke from charcoal kilns of oak-wood established on the edge of the forest. The injured trees were vigorous individuals growing in a hollow, which it had been found necessary to plant with this pine, because the oaks which formerly covered it had been unable to stand the frost. Close to the kilns, up to a distance of about ten paces, the pine leaves, red as if scorched, were quite dead. Immediately beyond, over a width of fifty paces more or less, the needles on the side of the crowns facing the kilns were reddened in the same way for three-quarters of their length, the green lower quarter being strongly marked off from the reddened extremities. Beyond this belt only the needles in the tops of the trees standing above the leaf-canopy had been discoloured.

The damage done can only be attributed to the effect of the hot air rising with the smoke, especially in a still atmosphere, when this heated air must have remained in the hollow for some time before it could get up through the crowns of the trees. It is certain that the effects of this heat must have been aggravated by the fact of the work of charcoal-making having been carried on during summer when the rapid evaporation from the leaves required a proportionally large absorption of water. That the damage was in any way due to poisoning by the oak-wood smoke, 1000 parts of which in the dry state contain only 0·175 parts of sulphurous acid, cannot be admitted, any more than the release of other hurtful volatile substances produced during carbonisation.

And yet, on an inspection of the branches sent by Herr Riedel, a strong analogy could not but be noticed between the effects produced on forests by the smoke of blast furnaces, which, we know, is heavily laden with sulphurous acid. An excellent opportunity thus presented itself for testing whether this analogy was only apparent or really went below the surface, by making experiments on the plan devised by Schröder and Reuss. As is well known, this plan consists in ascertaining the proportion of the acid present respectively in untouched parts and in those which have been more or less strongly damaged.

At my request, M. Riedel was good enough to send me branches of Scotch fir, well covered with leaves which were little or not at all damaged, as well as some pieces of the same oak-wood that had been used in the kilns. The needles, with a small quantity of carbonate of soda, were reduced to ashes in the flame of alcohol (common gas, which contains sulphur, could not be used) with all necessary precautions, and the amount of sulphurous acid in them was then determined. 100 parts of dry matter gave—

1. In the case of untouched leaves, ... ·0697 parts.
2. In the case of slightly touched leaves, ... ·0718 „
3. In the case of much damaged leaves, ... ·0701 „

These quantities are so nearly identical that the slight differences they show can only be regarded as accidental. The heavily damaged leaves contained even less acid than those only slightly touched and only about 4-thousandths more than those not touched at all. (M. Ramann, Professor at the Forest Academy of Eberswald in *Revue des Eaux et Forêts*).

FERTILE SEEDS IN DEODAR CONES.—Nának Chand, who was formerly head gardener under Dr. Jamieson, late Superintendent of the Government Botanical Gardens in these Provinces, says that in

deodar cones only three rows of scales in the middle bear fertile seed. Our readers in the North-Western Himalayas will be able to verify this assertion, and will no doubt communicate to us the results of their own experience. This same Nának Chand was, we believe, the real discoverer of Cautley's great find of Siwalik mammals.

SAW-DUST AS FUEL.—A new scheme of utilising the saw-dust of the Ottawa River for the purpose of fuel is proposed. It is claimed that by a system of grinding the refuse into a uniform fineness, mixing it with tar from the gas-house and compressing it into cakes, a fuel can be made superior to soft coal for open fires. Saw-dust rolls were common forty years ago in England and Scotland, and were considered far a-head of peat and grate fires. The cost of manufacturing this new fuel is merely nominal, and it is expected that it can be sold at a very much lower price than soft coal. —(*Canadian Manufacturer*).

THE EFFECT OF FOG ON PLANTS.—At a late meeting of the Royal Botanic Society the Secretary reported that the recent fogs had done much damage to the plants in the conservatories, causing many of them to shed both leaves and flower buds. More especially had this been the case with Australian plants, which, from enjoying in their own country a large amount of sun-light, were less capable than any others of contending against the vicissitudes of London weather. The plants, however, suffered not only from the absence of light, but from the pores of their leaves becoming filled up with the sulphurous sooty matters contained in London fog.

A NEW MODE OF FELLING TREES.—A new method of felling trees has recently been adopted in the forests of Galicia. The motive power employed is electricity. Instead of a saw being used, the entire work of cutting is effected with a rapidly revolving drill, which is capable of motion backwards and forwards in a horizontal line. The drill is actuated by an electric motor mounted on a carriage, which is brought up close to the tree to be felled and shackled to it. The motor is capable of turning round on a vertical axis, and the drill is geared to it in such a manner that it can, as already stated, move backwards and forwards along an arc in a horizontal plane. The first cut made, the drill is advanced a few inches and another section of the wood is gouged out with it;

and so on until the trunk is nearly severed. As the work proceeds, wedges are driven into the cut to prevent it from closing over the drill. The remainder of the work is finished with a hand saw or an axe. The current is conveyed to the motor by insulated wires communicating with a generator established at some convenient spot in the forest.

SUPPLY OF GYPSUM FOR AGRICULTURAL PURPOSES.—We are informed that the Remount Depôt at Saharanpur has just obtained a supply of about 30 maunds of gypsum from Sahensra Dhara at the foot of the Mussoorie hill. The cost of excavation and transport to Dehra was Re. 1 per maund, and the further cost of carriage on to Saharanpur was 4 annas. This gypsum was pure, soft and perfectly white. We are not aware why the salt mines at Khewra in the Punjab were not indented on. At those mines the cost of excavation would be *nil*, as the gypsum has to be taken out so as to get at the salt and is carried away as rubbish. The distance from Khewra to Saharanpur is 378 miles, the whole way by railway, and we have been told that the freight per maund for the entire distance would be Re. 1-0-4. The officer to apply to for the gypsum is the Superintendent, Mayo Salt Mines, Khewra, Punjab.

THE GREAT ATLANTIC RAFT.—It will be remembered that a gigantic raft of timber was launched last year at Nova Scotia, its destination being New York. The storms encountered during the voyage of seven hundred miles caused the monster structure to break up, and the timber was lost. But, nothing daunted, the promoters of the enterprise determined to build another larger raft, for they had proved that a structure of the kind could be launched and navigated. This second raft, or rather bale of timber, has not only been successfully started, but has reached its journey's end without mishap. In order that our readers may realize the gigantic scale upon which this novel structure is built, the following particulars are given. The raft is the shape of a cigar, and has a length just short of 600 feet, its girth being 150 feet, and its estimated weight 10,000 tons. The timber of which it is composed consists of tapering logs, which are about 40 feet in length, and 14 to 16 inches in diameter at their larger ends. A monster chain forms the core of the structure, and this cable has smaller chains attached to it in such a way, and fastened at the outer surface of the mass of wood, that the stronger the pull upon the main cable, the

closer are the timbers clutched together. The raft was towed by powerful steam-tugs, the journey occupying only 11 days. The 22,000 logs of which it is composed would, under ordinary circumstances, constitute the freight of no fewer than 44 ships.—(*Chambers's Journal*).

A PLAGUE OF TIGERS IN JAVA.—Portions of this island are being depopulated through tigers. In consequence of the dread existing among the people, it has been proposed to deport the inhabitants of the villages most threatened to other parts of the country where tigers are not so common. At present the people fear to go anywhere near the borders of the forest. They seem to be disinclined, or they lack the means and courage, to destroy their enemy in spite of considerable rewards offered by Government for his destruction. In 1888 the reward was raised to 200 florins. It appears, also, that the immunity of the tiger is in part due to superstition, for it is considered wrong to kill one unless he attacks first or otherwise does injury, moreover, the people are not allowed to carry arms.—(*Allen's Indian Mail*).

THE

INDIAN FORESTER.

Vol. XV.] May, 1889. [No. 5.

EXPERIMENTS IN SILK-WORM REARING AT BERHAMPUR.

(*Continued from page* 134).

A silk-worm infected with *pebrine* succumbs after 30 days to the disease, whilst for the healthy insect, the stages from the egg to the moth are as follows : —

Larva state,	...	25 to 35 days,	according as the weather is hot or cold.
Pupa state,	...	8 to 15 „	„
Total,	...	33 to 50 „	

The only plan for combatting successfully this dreadful scourge which from 1868 to 1872 almost ruined silk production in Europe, results from M. Pasteur's discovery that the eggs of all pebrinised moths are more or less infected, and to his system of only breeding from moths free from *pebrine* corpuscles, and in isolated spots away from silk-rearing establishments.

It is, however, found to be immaterial whether the male moth be pebrinised or not, provided the female be healthy ; and pairs of moths are now isolated in various ways for breeding, the commonest being by the use of small muslin bags, or pieces of cloth suspended from frames, on which the couples are placed early in the morning, the male being separated in the afternoon, and the female being pinned up in a corner, when she has finished laying her eggs on the cloth.

The female, or the male and female together, are then pounded in a mortar, and examined under the microscope, and only those eggs preserved whose progenitors were found free from corpuscles.

Some other rougher methods of obtaining fairly good eggs are also used, and eggs sold in Europe are now classified as follows :—

(1). Double zero—both male and female moths being found

free from *pebrine*. This precaution is not necessary, and is only employed to obtain fancy prices for the eggs.

(2). Cellular eggs—in which the female moths only are examined and found free from *pebrine*.

(3). Cellular eggs—with female moths attached, not examined, but guaranteed to be healthy.

(4). Industrial eggs—deposited on large pieces of cloth hanging like maps against walls, and each containing about 25,000 moths, of which about 50 are examined, and if they show less than 5 per cent. of *pebrine*, the eggs are sold, but chiefly in foreign countries.

(5). Foreigners, such as Turks, Syrians and Persians, however, buy seed cocoons, which are brought in by the rearers to the seed establishments, obtaining a sort of guarantee that some of the pupæ have been examined and are found fairly free from *pebrine*.

The method of microscopic selection is now universally followed in Europe and at Susani's establishment near Milan, as many as 160 microscopes are employed, so that European eggs are now so good, that all those used in Turkey and Syria are imported from France and Italy.

Practical instruction in silk-worm rearing is now afforded at every Ecole Normale for boys and girls in the south of France.

When a worm is attacked by *Muscardine*, it continues to appear healthy, even when its death is imminent, but its body becomes hard and of a light rose colour. Its blood turns very acid, and the pulsation of its dorsal vessel is accelerated.

After its death, which happens about ten days after a spore has lodged in it, or three or four days after it has been inoculated with spores by pricking, it hardens, resembling a petrefaction, its colour in dry air being brown, but in moist air it becomes covered with a white down.

If the insect dies as a pupa, this becomes hard, dry, and sounds like a pebble inside the cocoon.

Dr. Bassi, in 1835, showed that the white down on the surface of insects infected with muscardine is the fructification of a microscopic fungus named *Botrytis Bassiana*, of which the mycellæ fill the body of the larvæ, and the spores may remain alive for three years. These spores escape in myriads from the plants, and either fall on healthy worms, or on the leaves they are eating, and under favourable circumstances germinate and send filaments into the bodies of the larvæ, and especially into their fatty tissue, giving rise to a multitude of little conidies sending out fresh filaments to all parts of the larvæ, except the silky fluid and the blood.

The latter becomes very acid, and a few drops when dried on a piece of glass show lozenge-shaped crystals, resembling those of uric acid.

The *Botrytis* attacks the larvæ of many species of insects, and may be reared on paste, gum, sugar, and such like substances.

Muscardine does not confine its attacks to weak individuals, the most healthy silk-worms being attacked, as well as those which appear to be weaker. It is most contagious from the spread of the spores, for which hot dry air is very favourable, and there is no remedy known when once a silk-worm is attacked by the *Botrytis*.

Fortunately, it is easy to prevent this fatal disease, by carefully examining the baskets or boxes at the feeding times, which are distributed thrice during the 24 hours, and at the first signs of the disease, by burning sulphur in the rearing houses, so as to produce fumes of sulphurous oxide gas, which, if in sufficient quantity, destroy the spores and mycelia of the fungi.

The rearing room should be whitewashed, and admission of external air excluded, and then, for every 1,000 cubic feet of space, 5 to 8 lbs. of sulphur should be pounded up with about half or three-quarters of a pound of saltpetre, and the mixture burned. Fumigations by chlorine gas, or by burning green wood, are also efficacious in destroying the *Botrytis*, and none of these measures injure the larvæ.

As all worms attacked by *Muscardine* die before they become moths, there can be no question of transmission of *Muscardine* by heredity.

Flacherie, also called in French *morts flats*, shows itself as follows:—Full-sized worms become languid, and slow in their movements, and at length remain motionless on the edges of twigs placed for them to spin on. Their excrements frequently become semi-liquid, and on drying up close the anal orifice. The disease spreads rapidly amongst the silk-worms, and a few hours after it has first been noticed, hundreds of dead larvæ may be counted.

These soon become flabby, and eventually quite soft and black, exhaling a fœtid odour, and presenting every sign of putrefaction. An entire brood of silk-worms may thus be destroyed in a single day, and the mortality may in some cases ensue in the pupa stage, when the silk is spoiled.

This disease has been known since 1765, and it has been recognized that crowding, insufficient ventilation, and a damp heat, are favourable conditions for its spread amongst silk-worms.

The actual causes, however, of *flacherie* were only discovered

by Pasteur in 1867, and he has shown that it is due to incapacity of the worms to digest their green food, which fills their alimentary canals and there ferments and putrefies.

The putrefaction is exactly similar to that taking place in a decoction of mulberry leaf in a glass vessel exposed to the air, and is due to the development of micrococci forming strings of germs, each about the thousandth part of a millimetre in length.

Myriads of these germs, and of the bacilli which spring from them, fill the liquid in the stomachs of the larvæ, causing death most rapidly.

Flacherie is most contagious, the proximity of worms already attacked by it being quite sufficient to bring on the death of perfectly healthy larvæ, whilst the fact of feeding silk-worms with leaves infected by the excrements of those diseased, or with fermenting mulberry leaf, or with any putrid matter, brings on the disease.

Some silk-worms in every brood that is attacked, however, escape the disease, and this is due to the strength of their digestive fluids, which either destroy the bacilli, or prevent their increase beyond a number consistent with the fairly healthy state of the insects.

Hence, *flacherie* only becomes fatal when the digestive fluids of the larvæ are insufficient in quantity, or poor in quality, and is the result of a struggle for supremacy between them on the one hand, and the germs on the other.

The prevention of *flacherie* is therefore to be sought in rearing as strong and healthy larvæ as possible, by excluding from reproduction all broods which may have become affected with the disease ; by carefully preserving the eggs and rearing the young broods, and by affording the latter sufficient space, and not allowing a close atmosphere in the rearing rooms ; by using as fodder only healthy, fresh and clean leaf, and by keeping the rearing room as clean as possible.

M. Susani prefers breeding with moths from medium-sized cocoons, as large worms, having no larger tracheæ than smaller worms, breathe slowly, and may become infected with *flacherie* owing to their insufficient powers of respiration.

Large silk-worms may also contain more *pebrine* corpuscles than smaller ones, whilst they produce a comparatively large pupa, and give less silk, weight for weight than smaller cocoons.

Firm, roundish and small healthy cocoons are the best, those of the Shanghai silk-worm approaching the ideal of a perfect cocoon.

Mr. Mukerji has introduced in his rearing house at Berhampur a capital plan to secure cleanliness, having in each box two nets with a mesh of about half an inch, instead of the papers perforated by holes of various sizes, according to the age of the larvæ, which are sometimes used in European laboratories.

A fresh net covered with new leaf is supplied at feeding time, the worms then find their way up from the lower net on to the new leaf, and the latter can be removed with the excrements and exuviæ of the larvæ, and the stalks of the old leaf. Unhealthy worms also remain below and can be removed with the refuse.

The disposal of the refuse requires careful consideration, as if it be used, as at present, to manure the mulberry plantations, it may prove a source of infection, and nothing can be worse than the present plan followed by Bengali cocoon rearers of retaining their refuse in heaps in the breeding rooms during the cold season, with the object of keeping up the temperature, and thus exposing the larvæ to *flacherie* and other diseases.

The refuse of the rearing room is a valuable manure, but should not be used for mulberry plantations but for other crops.

Grasserie, is considered by M. Maillôt, as of little importance when compared with the preceding enemies of the silk-worm, but Mr. Mukerji lost the entire produce of 1,000 boxes of silk-worms from this disease during his absence from Berhampur on deputation to Europe.

Its nature is not yet understood, but its presence may be detected as follows :—One finds in a healthy brood of silk-worms that a few larvæ, which only move about slowly, have shining, thin, and distended skins, and exude a purulent liquid, their bodies being of a bright yellow, or milky white colour, according to the variety.

The liquid, which fills the cavities of their bodies and exudes from their skins, when examined microscopically, shows myriads of globules, at first appearing to be spheroidal, but really polyhedronal. Their chemical composition has not yet been determined, but they do not decompose when kept in water, or in a lump.

A damp cold atmosphere favours *grasserie*, but it is not considered infectious, nor hereditary.

If, however, a great number of silk-worms are attacked by *grasserie*, it would be prudent to reel off all the resulting cocoons, and not to breed from the moths.

Besides the above diseases, it is found that a number of worms turn into pupæ and moths without spinning cocoons, or after spinning merely filamentary ones. Such insects are termed *courts* in

French, *láli* in Bengáli, and if dissected, are found to possess only small silk glands.

It may, however, happen that a larva does not spin from want of suitable twigs, or spinning screens.

For *Bombyx mori*, small bunches of twigs are put above the trays, as soon as the larvæ are seen to be ready for spinning by the golden colored silk glands showing through their skin, and they climb up into these and spin their cocoons. The polyvoltine worms are too sluggish to mount on twigs, and if left in the breeding trays, would spin there amongst the refuse leaf, which is of course objectionable. It is necessary, therefore, that they should be removed at a considerable expense of labour to spinning screens, which are appliances termed *Chandraki* in Bengali, made of bamboo matting, with circular compartments in which the cocoons are spun.

Bengalis do not separate moths produced by non-spinning larvæ from others used for breeding, but this should always be done, as such a condition as *láli* must tend to become hereditary.

Another common imperfection is that of double cocoons, and Chinese and Japanese cocoons frequently contain 20 to 30 and even 35 per cent. of *doubles*.

They are spun by two worms jointly, and are large and ill-shaped, and contain two pupæ.

Doubles cannot be reeled, and the tendency to produce them is hereditary, whilst there is much inducement for fraudulent dealers to use the resulting moths for breeding; it is, therefore, not advisable to procure eggs from China, Japan or Persia; but if the varieties of silk-worms indigenous in those countries are required, to indent for their eggs from France and Italy, where Chinese, Japanese and Persian worms have been acclimatised and bred for sale for many generations, and where the quality of the produce is guaranteed.

It remains to describe Mr. Mukerji's proposals for the improvement of the Bengal silk industry, which are:—

(1). The establishment of two small rearing houses for the production of healthy seed cocoons in each silk-breeding district of Bengal, to be subsidized by Government, but to be managed by men trained by Mr. Mukerji.

These establishments should be at least two or three miles from any silk-worm rearing village, or filature, but except for using microscopically selected eggs, and disinfecting their room, the native method of rearing should be followed, as Mr. Mukerji considers his boxes only essential when rearing is done at every generation,

when the parasitic flies become so numerous that rearing in open trays would become impossible after two or three generations.

Mr. Mukerji writes as follows about his central breeding establishment at Berhampur :—

"The result of my rearing is that my crop is now a certainty, and it is being bought up by villagers as good seed at a fair price, *i.e.*, one rupee a seer for seed cocoons.

"The first time I did the rearing on a large scale (last November), I distributed the crop gratis in seed cocoons to about 300 rearers. This has given very good results in the villages, and my present crop, which will supply seed to more than a thousand villages, is being bought up by the same rearers who got it free last time, as well as by others.

"I have prepared an agency to carry on the work and extend it, if necessary, provided it is helped by Government, or by a syndicate of silk merchants, for about two years.

"For the first two years they will have to depend on purchased leaf and hired labour, and it is doubtful whether they will be able to make their rearing pay its way, until they have their own mulberry land, which will be fit for use after two years.

"I am therefore compensating them at present for their excess expenditure, but do not think this will be necessary after two years, when I hope that results will show that the agency can carry on the sale of seed cocoons as a new trade, without any extraneous help.

"They will follow Pasteur's system of seed selection, and do their rearing at a distance from silk-producing villages, and from filatures, but can otherwise follow the ordinary native methods of rearing.

"Besides the central establishment at Berhampur, there is another at Maldah, one in Rájshahye, and another in the Murshedábád district, which have been started under trained men, who will carry on the work at their own expense, if they receive a subsidy during the first two years, when they will have to buy leaf."

M. Maillôt is strongly in favour of small isolated nurseries for silk-worms, as the accumulation of numbers of larvæ in one nursery favours contagion, and cannot be so carefully and economically attended to, or so well supplied with leaf, as a small nursery, whilst there is more danger in the former case, of unequal temperature or droughts, and if a disease like flacherie should break out, the destruction of the whole brood might follow, which of course would cause a far more serious loss in a large than in a small nursery.

(2). Whilst considering the supply of healthy eggs as the chief object to be kept in view, at present, Mr. Mukerji would like to establish a central sericultural laboratory near Calcutta, probably at Sibpur, where the proximity of the Botanic Garden would be utilized for a supply of food plants.

The following would be the objects of the sericultural laboratory :—

(*a*), study of the diseases of different silk-worms, with a view to supply healthy seed to villagers ;

(*b*), study of the best manner of rearing silk-worms so as to obtain superior crops and to protect them from various pests ;

(*c*), introduction of superior classes of cocoons, domesticated and wild, such as the Shanghai cocoons, the Yamamai cocoons of Japan,&c.;

(*d*), selection of cocoons with a view to establish pure breeds and thus ensure uniformity of shade. The mixture of brown and white cocoons in the *Eri*, for instance, is a great drawback to its usefulness as a first class cocoon for carding purposes ;

(*e*), reeling of various cocoons with a view to introduce any improvements in this direction ;

(*f*), ascertaining the technical value of cocoons and raw silks, *viz.*, what is done in the laboratory of Lyons ;

(*g*), attempting to lead up the silk industry of the country a step further by demonstrating how organzine and trame, or twisted silk are made out of raw silk, the process being comparatively simple and capable of introduction into this country ;

(*h*), training a number of men, who will be able to spread any improvements effected in the laboratory, in the silk districts, and who will also be able to keep themselves informed about the sericulture of other countries. They should be taught French and Italian for this purpose.

(3). Another scheme is to buy a large quantity of ordinary seed cocoons from good seed centres, after microscopic examination, just before the principal *bunds*, or breeding times, and sell it again to the villagers.

Up to 10 per cent. of pebrine might be allowed in the microscopic examination of samples, as 5 per cent. is allowed in the industrial seed of Europe.

I propose to close this paper with a short economic account of silk production in the Murshedábád district.

It appears that at present seed cocoons cost 8 annas a pound, and that 10 lbs. of them will yield sufficient worms for the produce of 10 acres of mulberry land.

These should yield 6,000 lbs. of cocoons annually, and at the rate of 15 lbs. of cocoons for 1 lb. of raw silk, worth Rs. 700 per maund of 80 lbs., we get 400 × 700 ÷ 80 Rs. = Rs. 3,500 for the value of the raw silk produced.

To rear the cocoons, ten men at Rs. 6 per mensem will be required, the cost of manuring and cultivating the land being Rs. 45 per acre, while Rs. 30 goes in rent.

Mulberry lands are not irrigated in this district, so that there will be no charge for water. Reeling off the silk costs Re. 1 per lb.

The principal capital charge would be for the erection of three thatched mud-walled houses, measuring 27′ × 18′, and 6 feet high at the eaves and 16 feet at the ridge pole, with a raised floor, 3 feet above the ground level, and costing, say Rs. 450.

Thus the cost of the production of Rs. 3,500 worth of raw silk will be—

	Rs.
Interest on houses, at 10 per cent., ...	45
Rent, at Rs. 6 per acre, ...	60
Cultivation and manuring mulberry land, ...	450
Labour for rearing, ...	900
Cost of reeling, ...	120
Extras, ...	25
Total, ...	1,600

showing a profit of Rs. 1,900.

It should, however, be remembered that rearing silk-worm demands great care and experience, and has not at present proved remunerative, except as a cottage industry, although Mr. Lister asserts that his success at Dehra in producing silk with hired labour will revolutionize the business.

There appears to be no limit to the demand for cocoons, and on account of the keen competition for cocoons from native owners of filatures preparing raw silk for local weaving, the Bengal filatures are paying, at the present rates for cocoons, in excess of their value at home rates.

DARJILING,
24th March, 1889.

W. R. FISHER.

EXPORT WORKS OF THE MANDI FOREST COMPANY, PUNJAB.

IN the December (1888) Number of the "Indian Forester" will be found an interesting account by Mr. F. O. Lemarchand of the works of the Mandi Forest Company; but perhaps the following additional remarks, recorded after a visit to the Godwa and Godanu forests in November last, may not be considered out of place.

Mandi is a Himalayan State, lying on the right bank of the river Sutlej. The forests leased by the Company from the Rajah are situated at an elevation of some 6,000 to 8,000 feet, and at a distance in a direct line of about 13 miles from that river. The timber is all converted into sleepers, which are conveyed from the

forests to the Sutlej in the manner about to be described, and are then floated down the river to a sale-depôt in the plains.

The most important and interesting of the methods adopted by the Company for the export of their sleepers are the following, *viz.* :—

1*st.*—They are conveyed from the forests to a point on the Imla-bimla stream, by means of a system of wooden trough-slides, in which water is kept running.

2*nd.*—They are transported from this point to the river Sutlej, down the bed of the Imla-bimla stream.

THE SLIDES.

The slide at Godwa taps four parts of the forest, each of the four arms running down the bottom of its own side-valley for some distance, until it meets one of the other arms. From each of the two junction points thus established, the sleepers proceed by a single branch slide to the meeting place of the streams they follow, and thence they pass down the main slide to its terminus. The total length of these slides is about 6 miles.

In its general aspect, the slide resembles those which have been in use since 1872 in the Jaunsár Division of the North-Western Provinces, where they were constructed by Mr. Bagshawe and his assistants. These slides have been fully described in an official paper, circulated by the Government of India in 1873 and 1874, and reprinted in No. CXXII. of the "Professional Papers on Indian Engineering" of the Thomason Civil Engineering College; but, as some important modifications have been introduced into the Mandi slides, it will be useful to give a description of them.

The trough is formed by three fir planks, each 12 feet long ; the two which form the sides are 10 inches broad and 2½ inches thick, but the bottom plank is 13 inches wide and 2 inches thick. At bends, the width of the latter is increased from 13 inches to 15 inches or even to 20 inches, according to the radius of the curve, so as to allow the sleepers to pass round freely. The trough is supported on wooden trestles as shown in the sketch. (*Fig.* 1).

Neither nails nor spikes are used ; the boards simply rest on the trestles, and are kept firmly in their places by means of oaken wedges (CC), the seams being caulked with moss. The head of the trestle (A) consists of a rough round log of fir or hard-wood, about 2½ feet to 3½ feet long, and from 12 inches to 15 inches in diameter ; the legs (BB) are rough poles of fir or other wood, some 3 inches in diameter at the upper end, let into the head, and spread outwards, so as to give rigidity to the structure. Ordinarily, the

trough is so laid that each 12 feet section is complete in itself; and a trestle of the kind above described is placed under each point of junction of the successive sections which compose it. (*Fig.* 2).

An intermediate trestle, with a lighter head, consisting of a round piece of wood some 9 inches in diameter, or of the half of a larger log which has been split down the middle, is placed midway between each pair of main trestles, so that the trough is supported at intervals of 6 feet throughout its length. Where, however, the legs of the trestles are long, so that the trough is raised high above the ground, or where the slide crosses a stream, the boards of the trough are usually laid so as to "break joint," the bottom boards meeting over each main trestle, and the side boards meeting over each intermediate trestle, and so on. This is found to increase the rigidity of the slide. At curves, the outer edge of the trough is laid higher than the inner edge, so as to reduce the force with which the descending sleeper strikes the outer side-plank. The gradient of the slide varies from the dead level to a fall of 40 in 100; but this slope can only be used for very short distances.

It is not too much to say that Mr. C. E. Fendall, by whom the works have been designed and carried out, has done wonders with these simple and fragile-looking trestles, which, while they have so far completely answered the purpose they were intended to serve, have cost far less than the wood-and-stone walls hitherto generally used to carry such troughs over inequalities in the ground. His first slide was laid on walls; but he soon abandoned them as being much too expensive for his purpose, and he then took to the trestles which are now employed throughout his works. When the slide crosses a stream, the slender legs of the trestle stand in the torrent; and it is found that, if carefully placed, they will resist a flood of some 6 feet in depth, without being carried away; even if a few of the supports should be broken or displaced by the force of the rushing water, the trough itself usually holds together, and work is not interrupted by the accident.

It is truly surprising to see the height above the bed of the rocky stream, at which this structure is carried. (*See Fig.* 3).

At one point the height above the ground at which the trough runs was found on measurement to be 30 feet. Here many of the trestle-legs stand on rocks, with piles of stones built up round the foot so as to prevent their slipping off. Where no such resting place can be found, the chasm or large boulder or rock which causes this, is spanned by poles laid horizontally, and on these the legs of shorter trestles are supported. In places of this kind, it is

usual to reduce the horizontal distance between the supports from 6 to 3 feet, by the addition of a second set of intermediate trestles.

The 'mass of sticks,' depicted in the sketch, which is copied from a photograph given to the writer by Mr. Fendall, might easily be thought to have too little rigidity to convey broad-gauge sleepers; but this has not been found to be the case, as the sleepers pass down the steep incline in perfect safety, and without its being possible to detect any vibration either when looking straight down the slide from above, or when viewing it from one side. It is found that the pace at which the sleeper travels is much affected by the quantity of water in the slide. It descends faster than the water, which in steep places is thrown out before it, so as somewhat to resemble the spouting of a whale. A cushion of water is thus formed in front of it; and if the quantity of water in the slide be increased, the pace at which the sleeper moves is thereby proportionally reduced. The slides are not continuous; there being breaks at intervals of about half a mile, where the sleepers are received in a pool formed by the erection of a weir, the top of which is level with the top of the slide leading from it. Mr. Fendall considers this to possess a great advantage over the continuous system, in that there is less difficulty in keeping up the supply of water, while the occurrence of an accident to any part of the trough or its supports, does not stop the entire work of sliding. The number of sleepers sent down the slide in a month is about 30,000.

The Godwa slide was built in 1888, and was designed to serve for three or four years' work only; but there appears to be no reason why it should not be made to last much longer by the replacement, from time to time, of such planks and parts of the trestles as may be found to require renewal; and although the extent of the durability of such a slide has yet to be proved, there is no present indication that the charges for its maintenance will be excessive. Mr. Fendall maintains that the wear and tear of his slide is less than that of a slide supported on walls, since their want of elasticity renders them liable to be much shaken and loosened during the descent of the sleepers. This disadvantage could no doubt be met by constructing the walls in a sufficiently substantial manner; but their cost would thereby be increased, and however desirable it may be to adopt a more solid system of supports for works of a more or less permanent nature, there can be little doubt that Mr. Fendall's slide is admirably adapted for temporary purposes; and that by means of it sleepers may be got out at a moderate cost, from localities where the amount of timber to

be exported, and the time over which its extraction is to be spread, would not warrant the erection of a more expensive structure.

Transport down the Stream.

From the foot of the slide above described, the sleepers are conducted, in batches of some 15,000, down the Imla-bimla valley, a distance of about 20 miles to the Sutlej. At the point where the stream was inspected, it has, generally speaking, a moderate fall; but the bottom of the valley contains many huge rounded masses of rock, between which the running water winds, and the actual bed, which is interrupted by many falls over the larger rocks, is studded with boulders of all sizes up to about 2 feet in diameter. In the easier parts, the most inconveniently situated of these boulders are moved to either side, so as to leave a more or less clear and straight channel, down which single sleepers may pass; and this is improved where necessary, particularly at bends in the course of the little canal thus formed, by placing a sleeper, or a short line of sleepers, along its edge, so that the floating timber may pass down without catching against stones.

At intervals of a few yards, where waterfalls of various heights are met with, the bottom and sides of the stream are completely lined with sleepers, skilfully laid so as to form a little shoot; and where one sleeper-length of such a shoot is insufficient, a second is added, having its upper end inserted just under the lower end of the first one, so that the water and the floating sleepers may pass down them easily. The lining of the stream may be prolonged to any distance in this manner; and some considerable falls or steep rapids of 15 or 20 feet in height are thus passed by a shoot consisting of a dozen or so of such sections, which are raised above the stream bed so as to give a gradual and suitable fall, and are, where necessary, supported on a temporary scaffolding of sleepers piled up below them. The 15,000 sleepers on their way to the Sutlej at the time the works were visited, covered a length of about three miles of the stream-bed. They were moved gradually on at a slow rate, the way being prepared a-head by using the sleepers arriving at the front, to build the various structures required to pass the rest of the batch down. The long train followed, as room in front was given for its progress; and the sleepers employed to form the channel were themselves sent on from the rear, when no more sleepers remained behind to be passed over them. In this manner the huge mass rolled onward, forming, with the water, a flattened endless band, the upper portion of which was floating on the lower portion; the construction of the shoots and slides was constantly

in progress in front, and their dismantlement was always going on in rear. When another batch of sleepers is to be brought down, the same process has to be repeated ; and it is said that this pays better than to provide any sort of slides, shoots or other structures, designed to last throughout the entire duration of the work ; for if sleepers were thus employed, an enormous number of them would be locked up, and the realization of their value would be delayed ; while the cost of cutting and bringing down wood of other kinds would be much more than that of re-building the sleepers-shoots in the manner described. The work is carried on by about 400 labourers on daily wages, who, with their eight headmen, are residents of Mandi, Suket, Biláspur or Kángra, and are supervised by a Munshi and four chaprassis. The men employed at the head of the moving batch of sleepers have been long accustomed to work of this kind, and have become very skilful in dealing with the various obstacles met with. A batch of 15,000 sleepers can be taken down the Imla-bimla stream in about 2½ to 3 months, that is to say, at the rate of 7 or 8 miles a month. The best season for this work is said to be during the months from September to December inclusive.

Conclusion.

The works, which reflect great credit on Mr. Fendall, are all constructed in a thoroughly practical manner, on business principles, so as to reduce the cost of export to a minimum, and thus to increase the profits of the Company. Experience may show that it is better to adhere to the old system of resting the trough on wood-and-stone walls, where the slide is intended to be of a permanent or semi-permanent nature. But Mr. Fendall's system has undergone a sufficient test to prove its suitability, for at any rate, temporary purposes ; and its comparative cheapness will enable it to be used for the export of sleepers from small forests to be worked out in a few seasons, where the construction of a wall-supported slide would be out of the question. Mr. Fendall hopes to take five lakhs of broad-gauge sleepers down his slide within a period of three years.

F. B.

THE TEACHING OF VEGETABLE MORPHOLOGY AND PHYSIOLOGY AT THE FOREST SCHOOL, DEHRA DUN.

An Explanation.

We are sorry to see, from several letters addressed to us, that

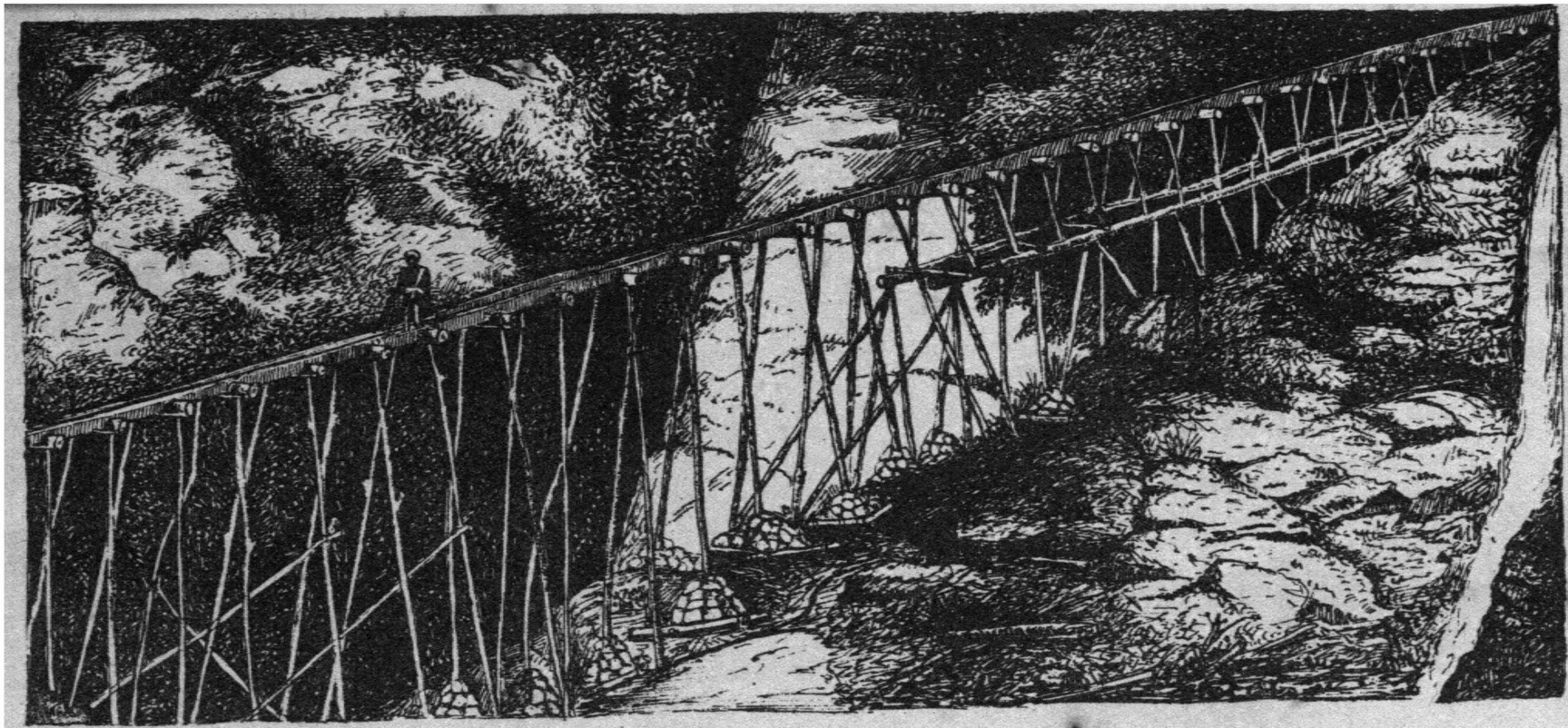

View of No. IV slide passing the waterfall, Gurdwah Forest, Mandi, Punjab.

Sketched from photographs by a native artist.

Photozincographed at the Office of the Trigonometrical Branch, Survey of India, Dehra Dún, April 1889.

Fig. 3.

the general remarks in which we expressed, in a guardedly qualified manner, our agreement with the opinions of the writer of the able review of the Forest School Report for 1887-88, have been misunderstood, and we are especially sorry that this misunderstanding has given umbrage to Mr. Fisher. Knowing, as Mr. Fisher does, what views with regard to the teaching of Systematic Botany we have consistently held since our first pupil was sent to us in 1874, or seven years before the Dehra Forest School was organised, he ought not to have considered us capable of so sudden a *volte face* as he attributes to us in his protest printed in the "Forester" for April. But this protest having been written, an explanation on our part has become unavoidable, although owing to our official connection with the Forest School we should have vastly preferred to remain silent on the subject.

We are so far from being opposed to the teaching of the German School of Vegetable Morphology and Physiology at Dehra, that we are proud to remind Mr. Fisher that it was not until after long and warm discussions that he finally adopted our views, and cut himself adrift from what he calls the Kew influence.

As regards the teaching of Systematic Botany, it has always been our opinion that, under the circumstances hitherto prevailing, the time given to it has been time wasted. This is rather a strong assertion to make, but it is easy to justify it.

The majority of the students who come to Dehra bring with them the very smallest modicum of general education, and while they are at the Forest School, they are really to a great extent acquiring that general knowledge and that general mental discipline which they should have received at school or college. This drawback cannot be removed, for, as every one knows, the prospects, initial and future, of candidates for Rangerships are, and can never be, good enough to attract men with any higher degree of education. And the Forest School cannot afford to keep the men longer than it does; nor is it necessary or advisable that it should do so, for we want our Rangers to be efficient practical foresters and not learned botanists, and it is quite enough that they should be able to recognise *empirically* the few species which they will have to deal with during the longest course of service mortal man can put in. As a rule, a Forest Subordinate should pass the whole of his service in a single forest region, the forest flora of which the most stupid man must learn in a very short time, if his official superiors, as we must assume, are up to their work. Once acquainted with his species, he will recognise them as easily and as quickly as, and often more easily and quickly than, the most able systematic bota-

nist. Under present circumstances, only a very limited number of hours can be allotted to the instruction in Systematic Botany, and during this short time, although we have the benefit of the ablest teaching available in India, nine out of ten men sent to the Forest School acquire the very smallest smattering of the subject that is as quickly forgotten as it is learnt. It is thus obvious that the time wasted in cramming only the merest smattering of Systematic Botany would be more usefully and profitably spent in learning Sylviculture more thoroughly. This smattering of botanical classification also breeds that very obnoxious spirit of pedantic conceit which makes the men discourse of sál as *Shorea robusta*, of teak as *Tectona grandis*, and so on.

Such being the case, it may be asked, why continue to teach so unnecessary a subject? This question is easily answered. If, on the one hand, it is true that Rangers need be able to recognise trees only empirically, and that the minds of the majority of our Forest School students are not sufficiently well disciplined for a study of the principles of the classification of plants; on the other hand, it is equally true that Sub-Assistant Conservators should know something of these principles, and that there are always some men in each year sufficiently well educated to study them with profit.

For the general reader it is necessary to state that the course of instruction at the Forest School has, up to this, been merely a shakeshift, but a makeshift unavoidable in the present makeshift organisation of the subordinate staff of the Department. Though nominally preparing men for mere Rangerships, the Forest School has also to educate every recruit for the Sub-Assistant Class. Its teaching is hence obliged to adapt itself to supply a double need. While mainly endeavouring to turn out instructed practical Rangers, it must at the same time do its best not to sacrifice the material sent to it that is suitable for supplying Sub-Assistant Conservators, but is yet not abundant enough to be constituted into a separate class for purposes of instruction. If there were no hope of this branch of the *personnel* expanding shortly, the School authorities would not have been justified in continuing to teach a subject that is admittedly beyond the scope of a Ranger's curriculum; but there is not only a hope, but a certainty, of such expansion, and when it comes, they will be fully prepared to meet it at once without the loss of time and groping in the dark that necessarily accompanies the inception of every new measure. Indeed, the courses at the Forest School have been so organised that, while they completely fulfil their present object, *viz.*, that of training men for a Ranger's duties, they can at once, without any loss of

time, be remodelled so as to allow of three separate classes being formed—a Sub-Assistants' Class, a Rangers' Class, and an extended Foresters' Class, each class comprising a first year's and a second year's course.

Thus far we are in perfect accord with Mr. Fisher. Where a difference begins is with regard to the extent to which Vegetable Morphology and Physiology respectively should be taught to the present class of students. Being the instructor for all the forestry subjects, we are in a specially favourable position to judge up to what standard each of the auxiliary sciences should be taught. Looking at these sciences from the stand point of forestry alone, there can be no hesitation in saying that Vegetable Morphology (including under this term anatomy) should play an entirely subsidiary *rôle* to Physiology, just so much of it being taught as is necessary to explain to the students the processes of nutrition, growth, flowering and fructification, and the dependence of these processes on the environment of the plant (soil, air, humidity, temperature, light, presence of neighbouring plants, &c.). Understood thus, the teaching of Morphology may be compressed into a very narrow compass, much narrower than what Mr. Fisher would apparently fix for it, and the time thereby saved should then be added on to what is now given to Vegetable Physiology. Most of the students come to the forestry class with very hazy and often incorrect notions of the subject, and have to be taught it all over again to the sacrifice of the time allotted to forestry.

We trust that the preceding explanations will satisfy Mr. Fisher and those who have written to us under a misapprehension of our views. We would have wished to write more fully, but official reserve necessarily lays down a limit which we cannot pass.

THE MENSURATION OF TIMBER AND TIMBER CROPS.

THE following paper has been compiled from German text-books, and especial use has been made of the Article by A. Ritter von Guttenberg, in Lorey's encyclopædic "Hand-book of Forestry," published in 1887. The compiler has endeavoured to give a short, yet clear, epitome of the subject, and to avoid as far as possible the use of those formulæ, &c., which, however interesting to the mathematician, are never used in practice. Should he have failed to render any part of the subject clear to the reader, he will be glad to supply any further information that may be required.

HERZBERG AM HARZ, *Germany.*

P. J. CARTER,
Dy. Consr. of Forests, Upper Burma.

PLAN OF THE WORK.

The division, and grouping of the subjects treated of in the following pages will be as under:—

I.—The measurement of heights, lengths, sectional areas, girths, and diameters of stems or trees.

II.—The measurement of felled trees.

III.—The measurement of standing trees.

IV.—The measurement of standing crops.

V.—The determination of the ages of trees and of crops.

VI.—The determination of the rate of increase of individual trees, and of masses of trees.

VII.—The compilation of tables of yield.

Chapter I.

On the measurement of heights, lengths, sectional areas, girths, and diameters of stems and trees.

Instruments for measuring the heights of trees are of two kinds:—

(i), those which give the height without calculation, their construction being based on the principle of similar triangles; and

(ii), those which give the angles made with a horizontal line by the lines of sight to the top and foot of the tree.

Instruments of both classes are very numerous, but the two most convenient are—Faustmann's Mirror Hypsometer, and Weise's Height Measurer. They both agree in having, at right angles to the line of sight, a sliding graduated rule, which, before an observation is taken, is so adjusted as to represent proportionally the height of the tree to be measured, and from the top of which hangs a plummet. Moreover, on the body of the instrument, runs a graduated scale similar to that on the sliding rule, so that when the instrument is directed to the top or bottom of the tree, the plummet line crosses the scale at the point which gives the figure expressing the vertical distance of the top or bottom of the tree, as the case may be, above or below the height of the observer's eye. The only difference between the two instruments is, that whereas, in Faustmann's Hypsometer, this figure is at once read in a mirror as soon as the top or bottom of the tree is bisected by the instrument; in Weise's Measurer, which is always made of metal, the graduations of the scale form a succession of serratures, which catch the plummet line and keep it in place until the figure indicated has been read.

For measuring lengths, graduated rules or tapes may be used. Where great accuracy is required, the length of a felled tree or log should be measured along, or parallel to, its axis, and not on its sloping surface.

The sectional area of a log or tree can very rarely indeed be obtained directly. In nearly every case the girth or diameter must be measured, and the area of the section determined as if the section were a circle. Area $= \frac{(\text{girth})^2}{4\pi} = \frac{\pi}{4}(\text{diameter})^2$.

Girths are measured with tapes. It is convenient to have tapes graduated on both sides—one side for reading the girth, and the other for reading the corresponding diameter. The zero end of the tape should be furnished with a sharp metal point that can be easily fixed in the bark of the tree, so that one person may be able to measure any stem, no matter how thick it is. As a circle encloses a greater area than any other plane figure of equal perimeter, and as the sectional outline of trees is seldom quite circular, the contents of a log or tree calculated directly from its girth will usually be in excess of the true contents. Unless the contour of the log is circular, it is impossible to obtain by girth measurement the circumference of the circle which encloses the same space as the section whose area is required. Irregularities of outline, due to fluting, bark, &c., cannot be overcome in measurements of girth, whereas, as we shall presently see, they can more or less successfully be allowed for in measuring diameters. Experiments made in Baden prove that girth measurement yields a result that is from six to ten times greater than that obtained by means of diameter measurement. It is, however, obvious that in cubing logs departing from the cylindrical form, the measurement of the girth is more to be relied on than the measurement of a single diameter.

When the contents of a log are to be deduced from diameter measurement, that diameter should be sought which, considered as the diameter of a circle, gives a result as nearly as practicable equal to the area of the section measured. When the section is elliptical, the mean of the longest and shortest diameters should be taken $\left(\frac{D+d}{2}\right)$, and the area of the section is then assumed to be $\frac{\pi}{4} \times \frac{D^2 + 2\,D\,d + d^2}{4}$. Now as the real area of the ellipse is $\frac{\pi}{4}\,Dd$, the mode of measurement recommended gives an excess of $\frac{\pi}{4}\left(\frac{D-d}{4}\right)^2$, that is to say, an excess equal to the area of a circle whose diameter is equal to half the difference of the two measured diameters. Save in very exceptional cases, this difference is small

enough to be negligible. The area of sections of irregular contour can be determined from the mean of three diameters, but the result thus obtained will generally be found to be somewhat too high.

Girths are measured with a calliper resembling, in all its essential parts, a shoemaker's measure. The pattern of calliper invented by Friedrich is one of the best. It consists of a graduated rule AA, to one end of which is fixed the arm BB. CC is a moveable arm capable of sliding backwards and forwards on the rule AA, which passes through the holes *abcd* in it. To enable the arm to slide freely the hole is made oblique to its inner face, but in such a manner that as soon as it comes in contact with the log to be embraced, the arm is pushed back and rests perpendicularly on the graduated rule, with which it remains in contact only along the edges *b* and *d*. In the annexed diagram C_1C_1 represents the position of the arm before it comes up against the log, C_2C_2 its subsequent position.

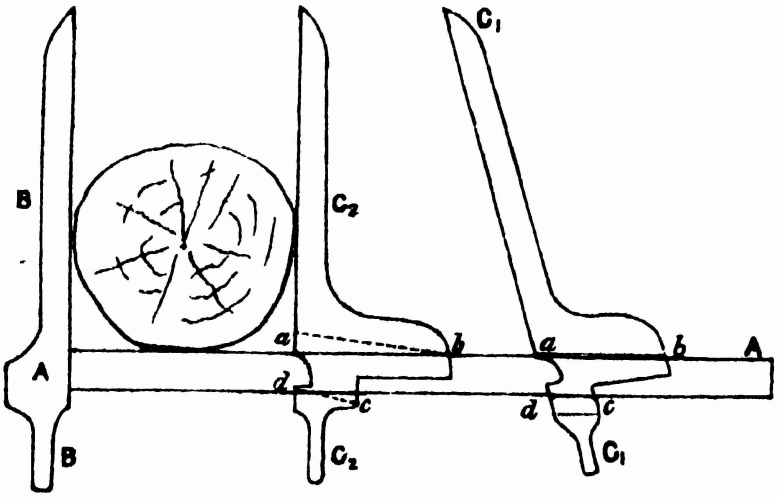

In measuring logs and trees the following general rules should be observed :—

(a). Diameters are to be preferred to girths.

(b). In the case of elliptical or oval stems, take the mean of the largest and smallest diameters.

(c). In the case of large stems measure at least two diameters.

(d). In the case of stems of irregular contour, measure several diameters, and avoid all protuberances, &c.

(e). Measure diameters and girths always in a plane at right angles to the axis of the stem.

(f). If the place of measurement falls on an irregular part of the stem, measure the diameter or girth, as the case may be, at an equal distance on either side (above and below) of the irregularity, and take the mean of the two measurements.

(g). Moss, &c., thick enough to vitiate the measurement of the stem, should be removed.

(*h*). If an accurate measurement of an irregular section is required, transfer its outline to tracing paper and compute its area with a planimeter or acre-comb.

(*i*). Never be without tables showing at a glance the areas of circles for given diameters and girths.

Chapter II.

On the Measurement of Felled Trees.

The felled trees should be cut up in the usual way, that is to say, into logs and smaller pieces.

1. *Measurement of Round Timber.*

Several formulæ have been devised for the determination of the contents of round timber with more or less near approach to accuracy, but only two are of practical utility. These are,

(i). $\frac{a_b + a_t}{2} \times l$ ..... known as Smalian's Formula; and

(ii). $a_m l$ ..... known as Huber's Formula.

In the above l is the length of the log, a_b, a_m and a_t the sectional area of the log at the base, middle and top, respectively.

Both formulæ contain an error, the extent of which is proportionate to the amount of difference between the diameters at the top and base, respectively, of the log, that is to say, to its degree of taper; and this error increases as the square of that difference. Huber's formula always gives too small, and Smalian's too great, a result, the error of defect in the one case being one-half the error of excess in the other.

Huber's formula has also another advantage, for which it is to be preferred: the ordinary modes of measurement and calculation give as a rule too high a figure for the sectional area concerned in each case. This excess is partly compensated for by the employment of Huber's formula, whereas the other would only exaggerate it.

In order still further to diminish error, long logs should be measured in two or more sections, the number of the sections increas-

ing, *i.e.*, their length diminishing, with the taper of each log. The contents of those of regular shape and not exceeding 20 feet in length may, however, be deduced from their sectional area in the middle. Longer logs, even if of regular shape, should be cubed in two or three sections.

All large round logs should be measured singly.

If the logs are stacked so that they cannot be conveniently measured in the middle, the mean of the sectional areas at the base and at the top must be taken. The mean sectional area should never, under any circumstances, be deduced from the mean of the two diameters at the two extremities respectively, or an error of from 10 to 15 per cent. may result.

Poles are seldom cubed singly; nearly always in stacks, built up of poles of one and the same length, and of approximately one and the same diameter. Their solid contents are generally ascertained by inspection from special tables.

Straight and regular-shaped branches are measured in the same way as logs.

2. *Measurement of Square-cut Timber.*

Such timber must of course be cubed by the formula, length × width × thickness.

3. *Measurement of Small Wood.*

The solid contents of toppings and loppings, and of irregular-shaped pieces from stumps and roots, are obtained by the *water-method* (being equal to the quantity of water they displace when submerged) or by the water-method and weighment combined. For the water-method special vessels, called *xylometers*, may be employed. In the combined system samples of each kind or class of wood are successively weighed and measured by the water-method, and the contents of the entire quantity in each class are then worked out by means of a simple proportion sum. Figures expressing specific gravity cannot be employed, since the specific gravity of wood varies not only according to the amount of moisture present, but even in one and the same tree according to the part from which it is derived.

The most rapid way of measuring small wood on a large scale is to stack it cut up into billets of one and the same length, the width of each stack being equal to the common length of the billets. The contents of a stack will be equal to length × height × common length of the billets. The length of a stack built up on a slope must be measured horizontally. The above formula will

give us only *stacked* contents; to reduce these to *solid* contents, we must determine, by the water-method, or by the combined water and weighment method, the exact volume of a sufficiently large number of stacked units, thereby obtaining the ratio between *solid* contents and *stacked* contents. To obtain the *solid* contents of a stack we have then only to multiply the *stacked* contents by this ratio, which we may hence term a *reducing factor*. The following figures may be accepted as average reducing factors for converting stacked into solid contents :—

For split wood, ...	0·60 to 0·80
„ round billets, ...	0·50 „ 0·65
„ small stuff, ...	0·30 „ 0·45
„ wood from stumps and roots, ...	0·30 „ 0·40

In connection with the determination of the solid contents of stacked wood it is obvious—

(*a*). That the longer the billets are, or the less carefully built up the stacks are, the less will be the solid contents. In careless stacking billets often lie across one another.

(*b*). That the thicker or more regular-shaped the billets are, or the more carefully built up the stacks are, the greater will be the solid contents.

(*c*). That the larger the stacks are, the larger will be the reducing factor to be adopted.

4. *Measurement of Bark.*

When bark is sold separately, its quantity may be determined either by weighment or by ascertainment of volume. The solid contents are calculated by means of reducing factors in the same way as the solid contents of small wood. Experiments give from 0·3 to 0·4 as the average factors for bark. It has been found that the quantity of bark varies from 6 to 15 per cent. of the total volume of the tree or crop.

Chapter III.

On the Measurement of Standing Trees.

In this case, unless ladders are used (a procedure that is hardly practical and is not really necessary) only a single diameter or girth can be measured directly, *viz.*, near the base of the tree. Any diameter above 6 feet from the ground must be measured indirectly by means of special instruments, the best of which are Winkler's and Saulaville's Dendrometers and Breymann's Univer-

sal Instrument. Obviously no direct measurement of the branches is practicable, and their cubical contents can, therefore, only be estimated from the results of special experiments, or with the help of long experience.

We have five different methods of estimating the contents of standing trees—

1. Ocular estimation, without any measurement at all.
2. Estimation with the help of *mass-tables*, the height and diameter at breast-height being accurately measured.
3. Estimation with the help of *form-factors*, which serve to reduce, to the true contents of the tree or of any part of the tree, the volume of the cylinder, whose height is the height of the tree and diameter the diameter of the tree measured at breast height.
4. Estimation by *richt*-height, in which, besides the diameter at breast-height, the height at which the stem tapers down to half that diameter, is measured.
5. Estimation with the help of the height of the tree and several diameters, the lowest of which is measured at breast height.

1. *Ocular Estimation.*

Practised wood-cutters are able to estimate more or less accurately with the eye alone the contents of trees belonging to species that they are familiar with, and growing in localities with the peculiarities of which they are acquainted. It is needless to say that the most experienced are liable to commit large errors, and that the inexperienced should never employ this method.

2. *Estimation with the help of Mass-tables.*

The mass-tables drawn up with great labour for the forests of the kingdom of Bavaria give the cubical contents of trees of known height, diameter and age-class. They comprise averages deduced from the measurements of 40,000 trees. On this account, although they give accurate results for a large number of trees taken together, they are not to be relied on for cubing trees singly, as the single tree in any given case may differ very widely from the average tree.

3. *Estimation by means of Form-factors.*

If a = sectional area of the trunk at breast-height, h = height of the tree, c = the true contents of the tree or tree-part consider-

ed, and C = volume of an ideal cylinder whose basal area is a and height h, then we have the following formulæ :—

$$c = fah, \text{ and } f = \frac{c}{ah} = \frac{c}{C},$$

where f is a constant termed the form-factor, and is deduced as an average from the measurement of a sufficiently large number of type trees. Type trees are selected, felled and measured separately for each age or size-class, and for each species or group of species.

Form-factors may be deduced, according to the requirements of the case, for the stem only, or for the whole tree, or for the timber only, or for the branches, or for the roots, or for all and each severally.

In the formulæ above we have supposed that the diameter and sectional measurements have been taken at the height of a man's chest above the ground, assumed, for the sake of uniformity, to be 4 feet 3 inches. But it is obvious that any other conventional height would serve the purpose, although it is usual and most convenient to employ the one we have adopted. We need refer to only one other convention which is sometimes used. The diameter may be measured at a constant fraction (say, for instance, one-twentieth) of the height of the tree, in which case the form-factors obtained are termed *normal*. Normal form-factors yield perfectly correct results, but they are not practical owing to the difficulty and trouble of measuring at such various heights, many of which cannot be conveniently reached.

Form-factors are said to be *absolute* when the base of the ideal cylinder is assumed to be in the same plane as the diameter which is measured. In this case the contents of the portion of the stem below the plane must be calculated separately.

Like mass-tables, form-factors give closer results for an entire forest than for individual trees.

The preparation of a complete set of form-factors requires great care and experience, as their correctness depends entirely on the selection of the type trees, whose dimensions serve as the basis of all the calculations. In some cases the trees of a crop have been classified into various classes according to their height and shape, and a separate form-factor calculated for each class. The most recent investigations prove that form-factors vary chiefly with the height of the trees.

4. *Estimation by* richt-*height*.

By the term *richt*-height we mean that height at which the stem of the tree measured has a diameter equal to half the diameter at some point near the ground. If h_r = the *richt*-height

h_g = the height at which the diameter near the ground is measured, and a = the sectional area of the stem at this height, then, according to Pressler, the contents of the stem

$$= \tfrac{2}{3}\, ah_r + ah_g.$$

This formula is based on the fact that the first term represents correctly the volume both of the cone and of the paraboloid, and is only 1·3 per cent. less than that of a cone with a concave surface.

The *richt*-height may be estimated with the eye, or obtained with the help of a special measurer (the *richt-tube*). This instrument consists of cardboard tubes telescoping one into the other. At the objective end of the outer tube are fixed two wire points at the extremities of one and the same diameter. The end of the innermost tube is closed, except for a small hole to which the eye is applied. To use the instrument, direct it on the trunk at the point where the diameter has been measured, and pull out the tubes until the wire points just embrace it. Then drawing out the tubes to twice this length, direct the instrument again on the tree, working it up along the trunk until the wire points just embrace it, and note the point where this occurs. The diameter at that point is, on the principle of similar triangles, half the original measured diameter, and the height of the point is the *richt*-height sought.

5. *Estimation by means of several diameters.*

The measurement of diameters above the reach of a man of average stature requires the use of special instruments, and hence this method is seldom employed.

6. *General.*

As the fourth and fifth methods can give only the contents of the stem, the contents of the branches and stump and roots must be obtained by means of special tables compiled for the purpose.

(*To be continued*).

FORESTRY IN HUNGARY.

(*Continued from page* 152).

Lipto-Ujvar.

Leaving Kássa on the morning of the 9th at 6 A.M., we took the train to Lipto-Ujvár. We travelled up the valley of the Hernád, through fine oak, beech and birch woods, which further on give way to cultivation, surmounted on the higher slopes by forests of spruce and silver fir.

In this neighbourhood there are numerous iron, copper, silver and antimony mines; and the line of railway passes close by a group of smelting furnaces, the sulphurous smoke from which has

completely destroyed and kept down all traces of vegetation for some distance around them. We noticed several noblemen's castles, with their distinguishing double roofs. The estates in which they stand were, generally speaking, granted with the patent of nobility; and the proprietor lives surrounded by the residences of the junior branches of the family, and by his tenantry and retainers, quite in the old feudal style. All members of the family use the name of the estate as a prefix to their surname. On leaving the valley of the Hernád, we passed over a high plateau near Poprád, which drains, on one side, by way of the Hernád, Tisza and Danube, into the Black Sea; and on the other, by some streams which we crossed, into the Vistula, and thence to the Baltic. From near this point, we had hoped to see the splendid view of the highest peaks of the Carpathians, which, at a distance of 9 miles from the railway, rise to an elevation of nearly 9,000 feet; but, unfortunately, the hills were covered with clouds, under which we could barely distinguish some patches of snow. We were sorely tempted to stop at Poprád, for the sake of paying a visit to the celebrated ice-cave at Dobsina, and also at Csorba to see the lake; but our time was very limited, and we had not been able to include even this, much less the longer tour from Poprád through the high mountains to Csorba, in our official programme, to which we were obliged to adhere rigidly, as the arrangements made for us at all points of our route would otherwise have been disturbed. We therefore ran straight on to Lipto-Ujvár, following the course of the Fekete Vág, on which we saw many rafts floating; piles of timber covered the ground near most of the railway stations.

On arrival, we went at once to the house of the Conservator, M. Kossányi, who, after breakfast, drove us through some magnificent forests of spruce, silver fir, larch, Scots pine, and other trees, up the valley of the Fekete Vág, which is extensively used for floating timber, until we reached the commodious and comfortably furnished forest house, occupied by the officer in charge of the Division, M. Adrianyi, under whose hospitable roof we passed the night.

On the morning of the 10th, we made an excursion higher up the valley, stopping to look at some spruce, silver fir, Scots pine, and larch nurseries, situated at an altitude of 2,600 feet. The plants are not only used in the State forests, but are also given *gratis* to communes and private proprietors. The demand for them is said to have been very heavy all over the country; and it is estimated that, if the present rate of issue be maintained, the large number of 25 million plants will have been distributed from the State nurseries during the year. Prizes are given by the State to private proprietors for successful planting operations.

We noticed that the Scots pine plants were very much larger than spruce of the same age; and that the latter appeared to flourish much better at the edges than in the centre of the seed bed, probably because they had more light and room. In planting on these hills it is customary to employ 60 per cent. of spruce, 25 per cent. of larch, and 15 per cent. of silver fir. Scots pine is not much used. The plants are all put out directly from the seed beds, without being previously put into nursery lines; the larch is planted at two years old, when it is found to succeed much better than if allowed to remain longer in the nursery. The larch trees in these forests are particularly fine; many of them are 110 feet high, and the quality of the wood is said to be even better than that of the trees grown in Styria.

The logs felled at the higher levels are sent down on earth or timber slides, to the bottom of the valley, whence they are drawn by horses to the river side. At one point of the road, we noticed that the base of the hill was apparently thickly studded with piles, driven into the flat ground immediately skirting it. These turned out to be the ends of stems or logs, which, after sliding down from above, buried themselves deep in the soft soil, and then either broke or were cut off. An arrangement for avoiding this, by receiving the ends of the logs on a wooden stage, similar to that previously described, seems to have been required here. We saw many dry timber-slides; and the banks of the river for long distances were rivetted with poles, to facilitate the passage of the rafts. Much damage is here done by the ice, which, during the winter months, collects at various points in the stream, thus forming temporary barriers, which dam back the current; and when these burst, the works are liable to be either washed away, or seriously injured. The floating work begins in the spring, when the river is fuller than at any other time, loose round logs about 16 feet long, intended to be sawn up into planks, being the first timber launched. In the summer the rafting commences, the reservoirs being used when necessary; and later in the year, when the supply of water in them is failing, loose pieces of firewood are floated down.

The prevailing winds sweep down the side valleys which descend from the south-east; and the trees standing on the opposite side of the main stream are liable to be overturned by them; but there are not nearly so many windfalls here as in the Mármaros-Sziget and Bustyaháza forests.

A few years ago the young pine stems, taken out in the course of thinning, could be sold for use in the smelting furnaces; but now-a-days the consumption of them for this purpose is less than formerly, and it is very difficult to dispose of such produce.

We inspected the Rasztoki reservoir, which lies near the head of the valley, and contains 1½ million cubic feet of water; it has a canal alongside of it, down which the water, entering at the upper end, can be diverted, when it is desired to float loose pieces of timber from forests situated above it; they are carried over the dam, by a canal slide with a steep fall, into the stream below. On our return to the forest house, we visited some plantations of spruce, which were put out by clumps of two or three in each hole.

In the afternoon we went down the river on rafts to Lipto-Ujvár, passing through the most beautiful scenery, and shot down two river slides, the descent of which, if not so difficult and dangerous as at Brusztura, was sufficiently exciting, and gave us a good wetting. We landed at the wood depôt, and proceeded at once to the house of the Conservator, with whose family we afterwards went to a ball, and were much interested by witnessing the Czardás or national Hungarian dance.

SELMECZ-BANYA.

Leaving Lipto-Ujvár by train on the morning of the 11th, we travelled westward, following the course of the Vág, on which many rafts were seen, to Ruttka, and thence, turning southward, up the Turocz stream, crossed a low ridge, and descended through the most picturesque country, past the charmingly situated village of Körmöcz-bánya, to the valley of the Garam river. The scenery here equals, if it does not surpass, anything we have ever beheld; and we were fortunate enough to see it at a most favourable time, when the lights and shades were at their very best. At Berzenze, where we left the main line, we entered a small carriage on the miners' train, and made our way to Selmecz-bánya, the seat of the celebrated forest and mining college. We were received at the railway station by the college authorities, and driven to the house of M. Sóltz, head of the Forest Branch, where, after visiting the botanical gardens, and being entertained at supper in the council hall by the Director, M. Torbaky, we passed the night. The gardens contain a good collection of trees, among them a deodar. Many of the species are American.

The college, at which there are at present 325 foresters and only 80 miners, supplies trained candidates, not only for the State, but also for private proprietors and companies. It used to be attended by students of many nationalities, the number sometimes exceeding 1000; but, for the last few years, all instruction has been given in the Hungarian language, and on this account, foreigners do not now enter the school. The young men live in the town, and attend the lecture theatres, which, with the museums and

halls of study, occupy seven large houses situated in various parts of it. The erection of a magnificent set of new buildings has been sanctioned; the plans, which were shown us, have been approved, and the work will be undertaken immediately. The Director and the Head of the School of Mines are the joint inventors of a system of accumulator, for use with the electric light; it is employed in the main building of the college, and is believed to surpass any that has previously been brought out. The light is perfectly steady, and the electricity can be stored for an almost indefinite time.

Early on the morning of the 12th we were shown over a part of the college, including the magnificent and complete collection of models of slides of all kinds, of rafts, weirs, booms, reservoirs, and sluice gates, as well as of tools and other implements connected with the felling, cutting up, and export of timber. The models, which are on a large scale, are beautifully made, and have been arranged by M. Szécsi, the Professor in charge of this branch of the instruction, who very kindly explained the most important of them to us, and presented us with a copy of his illustrated work on the subject. He also took us over the splendid collection of forest produce, raw and manufactured, including models to show the method of making charcoal, and of extracting potash and tar from wood, as well as many other things. Unfortunately we had not time to visit the natural history museums, which are believed to contain the best collections of minerals, rocks, botanical specimens and insects to be found at any such institution in the world. On these collections, which have been gradually brought together, no pains or expense appear to have been spared; and they are well worth what they have cost, as they enable the instruction in these branches to be given in the most complete manner.

We attended an examination at the school of mines, and inspected the models and collections of surveying and other instruments connected with that branch of the college, after which we went over the library. One excellent feature in the method of instruction pursued at Selmecz-bánya is, that splendid sets of figured tables, and clear large-scale drawings are provided; so that the necessity for making rough sketches, and writing out figured tables on the blackboard during the lectures, is avoided.

We regretted very much that, as we were obliged to continue our journey in the afternoon, we had not time to pay a visit to the mines, for which Selmecz-bánya has been celebrated ever since the days of the Romans.

(To be continued).

II. Review.

THE GAME LAWS OF THE CENTRAL PROVINCES.

In our January Number we published, with a few short comments of our own, the recently introduced game law of the Central Provinces. We then said that it was an attempt, and a very successful attempt, to grapple with the *shikár* difficulty, which in some districts of more advanced Provinces had reached a very acute stage. In commending the new rules to the other Local Governments and Administrations, and to all "true sportsmen" (we used these words advisedly), we did not of course overlook the probability of a strong opposition arising against a measure that was specially devised to set a limitation to the indiscriminate slaughter of game.

We have not had to wait long for this opposition to take definite shape, but it has come from a quarter whence we could not possibly have looked for it. One would have thought that the first murmur of protest would have been heard in the Province itself affected by the law, but true to their legend "*Urbs primus in Indis*," the citizens of Bombay met in solemn conclave a few weeks ago and set themselves up as the mentors of our rulers on this side of India. They addressed an officious remonstrance to Mr. Mackenzie, whom they found incapable of governing without their assistance, and they even questioned the legality of a measure, which every tyro knows is fully authorised by the Forest Acts. Every one will regret that the Bombay Natural History Society, whom we certainly expected to see ranged on the side of the advocates of the preservation of game, was unfortunately led into lending its great authority to this movement and acting as its mouthpiece.

The result of the Bombay opposition has been the promulgation of three additional rules (Nos. VI., VII. and VIII., published in our April Number), which only emphasize the rights of the State still further, and allow of shooting permits being taken out for fixed periods determined by the exigencies of fire conservancy, instead of for an indefinite number of days. During the rainy season months there is no danger to forests from fire. During the remainder of the year the danger of fire is greatest from the end

of the cold and dewy season (end of February) to the setting in of the rains. Hence three distinct periods and three respective rates of fees for the permits.

In these additional rules the Chief Commissioner wisely says that "shooting will not ordinarily be allowed within 'fire protected' forests during the hot season." A subsequent official communication, which we give below, explains the full meaning of this very necessary reservation :—

"1. Unless exceptional circumstances justify the *District Forest Officer* being present and enable him to accompany the shooting party permits will not be granted for shooting during the hot months in any of the following areas :—

The Bori forest in Hoshungabad.
The Jagmandal forest } in Mandla.
The Barela forest }
The Banjár forest }
The Háthibári forest in Biláspur.
The Pándrátola forest in Bálághát.
The Singrampur and Bijerágogarh forest in Jubbulpore.
The fire-protected areas in Ahiri } in Chanda.
" " " Moharli }

"2. There will be no shooting during the hot months in any of the other areas on the protection of which special expenditure has been incurred, unless it is possible and justifiable for the *Range Officer* to be present and accompany the sportsmen.

"3. In forests where, as in Chándgarh and Punása in Nimár, notwithstanding that special expenditure for the preservation of fire has been incurred, protection has not been complete for two or three successive years, no shooting will be allowed from the time that it becomes possible to fire the grass until the setting in of the rains.

"4. It is not intended that the rules should operate against the destruction of carnivorous animals dangerous to human life. In case of the appearance of a man-eating tiger or panther every reasonable facility will be afforded to persons willing to attempt its destruction. So far as is consistent with the main objects in view, the stipulations herein laid down may be relaxed in such cases in favour of reliable persons, and, in anticipation of the Conservator's sanction, free permits for this purpose may even be granted to persons whose position renders it improbable that they would purchase permits. The destruction of a man-eating tiger or panther is one of the objects that might possibly render expedient the presence of the Ranger or District Forest Officer with a shooting party, above referred to."

It will be noticed that the prohibition to shoot in the hot season is absolute in respect of the Chándgarh and Punása Reserves,

which have suffered from almost annual incendiary fires since the years 1874 and 1876, when they were respectively placed under protection from fire. The extension of this principle to all areas burnt by incendiaries during the previous season is to be recommended.

The agitation got up by the citizens of the spotless and faultless (?) Kingdom of Bombay has collapsed as suddenly and in as ridiculous a manner as it arose. Truly the mountain laboured only to produce a miserable little mouse.

The people of India cannot be too grateful to Mr. Mackenzie for his bold statesmanlike measure, which rulers of a weaker kidney, howsoever convinced of its urgency they might be, would have shrunk from adopting. In the Central Provinces Hunting and Fishing Rules, as now amplified, we have the germ, and even something more than the mere germ, of a Game Law for the whole of the Empire.

GAME BIRDS IN THE NIZAM'S DOMINIONS.—A Hyderabad paper thinks it is an astonishing thing that there are any game birds left in the Nizam's dominions. "Few people are aware of the enormous numbers which are annually destroyed in the Districts. The other day a man was seen taking into Hyderabad four or five hundred partridges and 18 peafowl, principally hens. Such wholesale destruction in their breeding season must eventually end in these birds becoming extinct unless the Nizam provides a close time for his 'bird subjects.'"

INSECTICIDES.—A correspondent, writing to a contemporary, says—I notice that in your last issue soot lime and hellebore powder are all recommended for the destruction of caterpillars, but perhaps it is not generally known that gas-tar is a first rate preventive which is better than cure. I have had whole plots of gooseberry bushes devastated by them, and also cabbage and cauliflower. Since I commenced to use gas-tar the caterpillars have not made their appearance, and it is both a safe and a cheap remedy for the gooseberry caterpillar and all others affecting green crops which are subject to attack.

MAHADEORAO RAMCHANDRA PALNAITKAR.—We have to record the tragic death, under very painful circumstances, of this promising young officer. On the morning of the 9th ultimo he was returning to Jubbulpore from an inspection tour. He was on foot and accompanied by a Mahomedan chaprassi, who was carrying his gun. While traversing the Gadheri forest he was suddenly set upon by several men, who attacked him with clubs. The attendant forthwith bolted away with the gun. Mahadeorao's camelmen, following behind with his camp, came up shortly after and found their master insensible on the ground and weltering in his blood. Mahadeorao was at once taken in a *duli* to Jubbulpore, where every attention was given him by the Civil and Assistant Surgeons; but he never regained consciousness, and died on the evening of the next day. Who the perpetrators of the murder are, still remains a mystery. It is, however, believed that they are not unconnected with some Mahomedan subordinates, whom Mahadeorao had recently brought to justice for official irregularities; and the Mahomedan chaprassi, who had accompanied him, is suspected of complicity, and has accordingly been arrested. Mahadeorao was one of the young natives of good family and position, who were appointed under the Rules of 1872. He was selected in 1874, soon after he had passed the First Examination in Arts of the Calcutta University, and for more than two years served his apprenticeship under us. During this period he was taught forestry and the auxiliary sciences, and received a thorough training in the executive work of a range and of a division. In order to qualify him for promotion to Sub-Assistant Conservator he was sent to the Dehra Forest School in July, 1882, and passed out with honours at the end of 1883. Mahadeorao inherited all the qualities of command of his Maratha ancestry, and we have known him, while still an apprentice of 21 years, manage with marked success gangs of upwards of 500 turbulent coolies. He was a fearless rider, and could endure any amount of hard knocking about. He possessed a jagir in the Damoh district that had been conferred on his great grandfather by the First Scindia. In the evidence given before the late Public Service Commission, it was he who was referred to as being, amongst the several native Sub-Assistants now in the Department, the one most qualified for promotion to the superior grades. By his death the State has lost a valuable servant, and the native community one of their finest representatives.

PROFESSOR WALLACE ABROAD.—Almost all the defects to which we shall draw attention are due to casual acceptance of exceptional or trivial matters as the basis for large conclusions, a too easy credulity, and a little neglect of the injunctions of the proverb which tells that the "Cobbler should stick to his last." Not the least valuable portions of the book are those which epitomise the opinions of Officers met by Professor Wallace while in India, and from (in some cases) having met the same Officers and discussed with them the very same matters as regards stock as were dealt with by Professor Wallace, I am able to recognise their remarks and views in his book, especially for example those on Mysore cattle and the breed of the North-West Provinces. Unintentionally certainly the Professor has failed to convey to the reader the full degree in which he was indebted to such officers as Colonel Hay, Syed Mahomed Hossein and the late Mr. Stormont, but it is satisfactory to find that their valuable views have now to an extent appeared in print.

There is uncertainty as to whom this book is addressed, and it reads as though mainly intended to inform the untravelled public at Home; if so, the author should not publish ill-ascertained statements nor should he make loose, ill-advised comments, as emanating from the Professor of Agriculture and Rural Economy in the University of Edinburgh. If the author intends the book for us in India to read, he should not exhaust our patience (we have not too much of this quality in the tropics) with such platitudes as "Butter soon becomes rancid unless kept in ice," "*Ghee* is very largely used in native cooking," "Buffaloes are extremely ugly," "Buffaloes have usually black skin," and so on *ad nauseam*. Again, naive descriptions of cases of *bursati*, anthrax, and other diseases must tax the patience of all horsemen and others who in this country have to do with livestock: it is not such matters as we learned in the first four months of *our* griffinage which we seek from a representative of the Science of the West when he travels in our benighted climes!

Natives, again, we are told, leave the breeding of their cattle to chance, and yet in other parts of the book we learn how the efforts of enlightened native rulers have resulted in some of the finest breeds of buffaloes and oxen in India! The Pinjrapoles are described as "charnel houses of misery and corruption:" this is a statement for trustees and governors of such institutions to see to. In Gujrat the "*he*-calves are starved to death." Cattle are branded to excess. The female calves are kept by milkmen in a state of constant semi-starvation. Horrible cruelty is perpetrated on tonga ponies, as forcibly described in the book. *Government*, hav-

ing spent public money in educating agriculturists, fails to employ them sufficiently; its officers are in many cases so tied down to desks and in offices as to be utterly ignorant of the requirements of the country; men are selected for important posts for reasons other than fitness; Government grass-cutters are sent out with practical instructions to "get grass, honestly if you can, *but get it.*" The *Agricultural Department* is a terrible sinner, its "efforts have been on lines with not the remotest chance of success;" it has been culpably neglectful in studying native practices; it has no competent teacher of agricultural chemistry; inexperienced Agricultural Officers have lost rather than made ground. Even about such important matters as fodder grasses, manure, preparation of tobacco for the European market, the best systems of indigo management, and the milking powers of cattle, our knowledge is defective. But what can be expected considering that we have is merely "dry bones without the flesh and muscle of a live department!" Although very much of the work of the Agricultural Department is made use of, I fail to find as liberal an acknowledgment as we might expect of the excellence and amount of work done by the Department with such means as it *can* command. *The Military Department and its Officers of Transport and Heavy Batteries* are severely dealt with. Their system of bullock management is irrational, their bullocks are inefficient through age, malformation, excessive height and want of muscle; there is in each collection of Army bullocks a "tale of unsatisfactory beasts, useless" for Army purposes; care is not taken to train and work the bullocks with a view to the exigencies of work and diet during a campaign; animals are hired for work which might have been done by bullocks the property of Government—which were standing eating their heads off. *Veterinary Surgeons* are ignorant about anthrax; they are "as a rule unwilling, and unable even if willing, to do satisfactory work in any other branch of the profession" than horse practice; both at home and abroad they neglect animals other than the horse, and (with exception of one case) the Veterinary Science taught in India does more harm than good. It is here necessary to deal with a few of the above statements, and I shall select those which directly concern me, in order that my refutation of them may be taken as a sample of how the Professor's other observations might be doubtless dealt with by the individuals concerned. If examining a few of the statements in detail we can show that they are based on error and misleading, we may fairly argue that the remainder should likewise fall to the ground.

1. *Europeans in India know little about cattle.* If by this is

BENGAL SECRETARIAT LIBRARY

meant that the few Europeans Professor Wallace met with during his tour of four months in India know little about cattle. I am willing to grant it, or, rather to leave them to disprove it. But we would ask, Did he meet with and question District Officers, Municipal Health Officers, Cattle Sergeants of Batteries, and European subordinates at cattle-breeding establishments, *i. e.*, those Europeans whose duty it is to deal with cattle? If by "Europeans" the Professor refers to these, his experience is in direct opposition to my own; if he means Europeans in general, we may assure him that in many cases we Europeans take interest in, and have some information of, most matters around us, and cattle, even when not directly connected with our work, have not been neglected. For example, merchants in Bombay or a Subaltern in an Infantry Regiment in Poona probably know more about bullocks for working purposes than a London merchant or a Life Guards Subaltern does about Kerry cows. Our Professor seems to have neglected the logical rule to only compare like with like, and I may assure him that those Europeans who in India have to do with cattle are not more ignorant on the average as regards cattle than those people in England who have to do with cattle. The few in India is in this statement legitimately comparable with the many in England.

2. *Few Europeans in India have any but local knowledge.* The fallacy of this is self-evident. The proportion of Europeans in India who have travelled extensively in India is extremely high, and even in cases where a man has travelled only in one presidency, it cannot, considering the size of the presidencies and variety of climate, races (animal and human), and customs in each, be considered in an invidious sense that he has only 'local' knowledge. An officer, for example, who has served in Dharwar, Guzerat, Kattywar, and Sind, surely may compare favourably as regards varied experience with a Londoner who has been to Germany, France, Italy and Belgium!

3. *We call bullocks bulls.* This shows that the Professor did not meet many of the Europeans in India who understand cattle. If he will consult any Transport Manual or Return, any Health Officer's Statement, and your columns daily, Mr. Editor, he will learn that in India we call bullocks *bullocks.* We are sorry the Professor bases his remarks about Indian cattle on information derived from those who do not so correctly speak. We are aware of a *philological* error which has given rise to some confusion in this matter at Cattle Shows in Mahratta countries, but that error is quite beside the main practical question. It has been suggested that perhaps the Professor, when he heard bullocks spoken of as "byles," thought "bulls" was the word used, with slight Anglo-Indian provincial accent. Can this have been so?

4. *Europeans do not know what the colour of the skin of an Indian bullock is*, and hence have failed to draw some important physiological conclusions from it. This statement at first sight perfectly confounds one! When asked what is the colour of the skin, one either gasps with astonishment and hesitates to reply in wonder whether his senses can have been playing him false since his first arrival in India, or else he thinks some amusing conundrum is being propounded to him, and laughingly "gives it up." Yet the Professor seriously replies. "It is black, and you have not noticed this before! See how shallow and careless you are, and how shrewd I am!" He proceeds to point out as strange white hairs growing on black skin, but you naturally say that your venerable Portuguese cook has white hair growing on the black skin of his head. You fail to see anything strange. You point out to the Professor that what he calls white cattle you call in many cases blue or grey, and that what he calls "skin" you call "hide,"; that we in India know without teaching that the hide of bullocks, though generally black, is sometimes white, and you further show that when in India we speak of "skin" of cattle we use the word in its correct anatomical sense as comprising both hair and hide. Finally, we state that we are well aware the hide of English cattle, on an average, contain less pigment than that of Indian, but we are assured that the former often contains much pigment. We grant the Professor's argument on the basis of hide of Indian cattle being black, but we politely request him to withdraw his unsubstantiated charge that we are ignorant.

5. *The Army bullocks are unserviceable, mismanaged, and signally failed when put to a test.* Admitted that there is room for improvement as to selection, feeding and training, and even that recently bullocks, the property of Government, have not done all that has been required of them—points which Government Officers are constantly reporting on—we cannot admit that the opinions on these points of Professor Wallace are to be accepted in opposition to the combined experience of officers having to deal with cattle in India. He criticises shape, feeding and work, the latter as illustrated by a special case. Let us examine these points in detail. As regard *shape* of Indian bullocks, the "fault" especially found are drooping croup and quarter, and small thighs. These are considered as faults, because they are markedly different from what is seen in English breeds, even those few Herefords, for example, which are used for working purposes. This must be admitted to be a very poor argument, for just as British cattle have superiority as beef and milk producers, and as attaining early maturity, so Indian cattle have superiority as workers; decidedly they are not

to be considered inferior in this respect to any British cattle, and it would be strange if the latter, which are very occasionally used to do draught work and are bred essentially *for other purposes*, could compare with our Indian cattle which have been bred *for work*. The Professor's logic is defective here again, he compares the infinitely small with the maximum. We admit his ability to criticise our cattle as beef-producers, we bow to his contempt for our best milk-producers ; but when he comes to criticise the shape which cumulative experience has judged and proved to be good for working cattle, we consider he has crossed the Rubicon, and that we have a fair *casus belli*. Now we know that in our best breeds the point of conformation to which he refers are deficient, but we have learned from experience that they are not required, nor essential for fleetness and efficiency in draught work. Ought we, therefore, to exchange a good conformation for a doubtful one? We are told that because English beef cattle and thoroughbred horses have high croups and large thighs, we should so breed our trotting and slow working bullocks ; but we fail to see the force of the argument, and would suggest that possibly it would be found advantage for slow horse drought and trotting in countries other than India if judges were less exacting in looking for high croup. Some of the best cart breeds of horses are very low in the croup, and the same so-called defect is well marked in Walers, which, nevertheless, are good horses, not only as regards pace, but also leaping powers. Thus, viewed practically and theoretically, the Professor has failed to make out his case that a drooping croup and small thighs, as seen in our best breeds of cattle, is a defect for working purposes. We refuse to accept him as a better judge of our cattle than Colonels Hay and Hawkes, and the numerous other zealous and efficient officers, European and Native, living and dead, who have made the leading Indian breeds of cattle the best in the world for working purposes. Again, as regards *feeding*, many of the Professor's remarks are excellent, and most satisfactory as confirming the views held and expressed by the veterinary profession in India for some years past ; others indicate a great tendency to theorise on the basis that what is working condition in the horse is so also in the ox. Now such is not the case, and it is amply proved by every day experience, as well as scientific observation, that good working condition in a bullock is what in a horse we should term "grossness." Concerning *Work:* in the first place we have some remarks on the necessity for years of friction on the part where the yoke rests, to prevent sores. These remarks are true up to a certain point, but they utterly fail to tell us the whole truth. Yoke-gall depends more on other conditions than the state of the skin, such as smooth-

ness of the yoke and adjustment of the load, and if these be properly attended to, the ordinary unthickened skin of the neck suffices to withstand yoke friction on a healthy animal. If bullocks had to have years of pressure gradually applied before we could be sure of their neck standing work, we should find the animals coming into work only just about when, according to the Professor, we ought to cast our bullocks for incipient unfitness for further duty! Next as to stopping and refusing to pull in deep sand. Had the Professor travelled much by bullock bandy, or been in charge of a regimental transport on the line of march, he would have soon learned, what we in India know from reiterated experience, that it is characteristic of all draught bullocks to stop and refuse to pull in deep sand, and that it is not the result of pampering in Government service, nor of neglect on the part of Artillery Officers to train their animals properly. The march to which reference is made in the work (I was once in veterinary charge of the Battery in question, and found its management of bullocks and elephants excellent) was a most creditable and successful one, though Professor Wallace considers it a failure. The distances covered would have done credit to a horse battery, and the number of casualties was trivial. In one part of his book the Professor shows how ridiculous it would be for a farmer to criticise military operations, utterly oblivious of the fact that earlier in the work he has been placing himself in this position.

The statements which we call in question present so many weak points that we are tempted to delay over them. We cannot exhaust our arguments, we have simply space and time to write of those which first present themselves. It will now suffice if we point out that *the charge of ignorance by Veterinary Surgeons in India concerning anthrax* is a singularly unfortunate one. It is in connection with this disease, more than any other, that we, Veterinary Surgeons in the East, have succeeded in re-paying an instalment of the knowledge we have received from the West. That *the profession neglects all branches of its work, except those which refer to horses*, and is unable or unwilling to attend cattle in India is unsubstantiated (even by the feeble and very venerable joke which is quoted in reference to it). On service and in cantonments Veterinary Officers have willingly done good work with cattle, often times even they have been charged with exceeding the work laid down for them in their professional zeal, or in the cause of humanity.—(I. H. STEEL, V. S. in *Times of India*).

THE WEATHER IN INDIA DURING DECEMBER.—The month of

December usually witnesses the final retreat of the south-west humid winds of the south-west monsoon circulation from the Bay of Bengal and Arabian Sea, and the establishment of the north-east monsoon circulation over the whole Indian area, including India and the adjacent seas north of the Equator. Hence, during the first fortnight of the month, rain continues to fall under the same conditions as in November in Southern India, but is generally confined to Travancore and the most southerly districts of Madras and Mysore. The final important burst of rain frequently accompanies the march of a small cyclonic storm which usually forms in the south-west of the Bay, advances in a westerly direction across the south Coromandel Coast, and breaks up shortly afterwards under the obstructive action of the Palni and other hills of Southern India. If what are termed the north-east monsoon rains (but which are really the concluding rains of the retreating south-west monsoon circulation) terminate with a cyclonic storm accompanied by a heavy cyclonic burst of rainfall, it usually occurs in the second or third week of December.

The conclusion of these rains in Southern India immediately precedes the establishment of conditions in Upper India which favour the occasional occurrence of cold-weather storms and rainfall in Northern India and of frequent snowfall in the Himalayan mountain region. During the first three weeks of the month weather is usually fine and clear in Northern and Central India, and temperature decreases rather rapidly (especially the night temperature in Upper India). The barometer usually oscillates somewhat rapidly through small amounts, the period of a complete rise and fall varying from two to five days. The periods of falling barometer are usually associated with a tendency to the formation of cloud, and of rising barometer with its dissipation. During the last week or ten days of the month there is, on the other hand, a marked tendency to disturbed weather in Upper India indicated by barometric movements on a larger scale and the formation of cloud; when this occurs a depression appears or forms in Upper India, and extends its influence eastwards and gives more or less rain. This weather forms the so-called "Christmas rains" of Upper India. When they occur, they are due to and accompany a feeble cyclonic depression or storm, and are usually followed by a succession of similar storms during the months of January and February. These cold-weather storms are of great economic importance, and form the most important feature of the weather of the last fortnight of December and the months of January and February. Their formation is by no means thoroughly understood as yet, but they

appear to originate in the upper return current of the north-east monsoon circulation, and generally drift from west to east or in an opposite direction to the cyclonic storms of the rains. As they originate in the upper atmosphere and their action is chiefly confined to the upper strata, (although they modify to some extent the air movement near the Earth's surface,) it is much more difficult to forecast their occurrence, line of march, and general character, than it is to forecast the storms of the rains.

The preceding remarks give the normal weather conditions and features of the month in the Indian area. In the adjacent seas the south-west humid winds retreat down to the Equator (and are probably finally absorbed in the Doldrums) and are replaced by north-east winds, so that before the end of the month, north-east monsoon winds usually prevail over the whole of the Arabian Sea and Bay of Bengal.—(*Meteorological Report*).

A NEW USE FOR INDIA-RUBBER.—India-rubber is being tried for paving streets in several German towns. The first pavement of the kind was laid by Busse of Linde on the Goethe Bridge in Hanover in 1887. The material is claimed to combine the elasticity of rubber with the resistance of stone and to be perfectly noiseless, unaffected by heat or cold, and less slippery than asphalte.

SECRETARIAT LIBRARY

THE

INDIAN FORESTER.

Vol. XV.] June, 1889. [No. 6.

THE PRODUCTION OF SEED IN ITS RELATION TO GROWTH AND TO THE RESERVE MATERIALS IN TREES.

(*Translated*).

EVERY one knows that the substances assimilated by a plant are not all used up in the same season in which they are formed, but that a portion is stored up in special tissues for use during the following season. Theodor Hartig, who was the first to observe this fact, designated such substances under the general name of *reserve materials*. In the case of annuals these reserve materials are stored up in the seed alone; in the case of perennials there are other store-houses for them besides the seed, as for instance the tubers and bulbs of herbaceous plants. In trees it is chiefly in the medullary rays and in the wood parenchyma that we find the reserve materials.

Amongst these substances the non-nitrogenous portion is most easy to recognize, since it occurs as starch grains, whereas the nitrogenous portions seldom present themselves under any distinguishable form, and their varying quantity can best be determined by determining the varying proportion of nitrogen in the wood.

Theodor Hartig sought to prove, by means of numerous experiments in pruning, the influence of the reserve food on the formation of the annual concentric zone of wood. He came to the conclusion that the whole of this reserve store, in trees as well as in annuals, becomes dissolved in summer and is all expended in the development of leaves and shoots, and in the nutrition of the cambium zone. Such is still the accepted opinion at the present day. According to it the reserve materials are nearly all dissolved and used up in spring to be freshly re-constituted at the close of

summer. One and the same tissue would thus perform different *rôles* at different seasons; from having been conducting tissue in spring, it would become storing tissue at the close of the season of vegetation. Whence the general belief that wood cut during the season of rest, in consequence of its containing its full quantum of reserve matter, is richer in nitrogenous substances, in potash, phosphoric acid, &c., and is heavier and less durable than wood cut during the season of vegetation.

In my treatise on the wood of Beech,* I have already combatted these erroneous ideas. In that book I have shown that in beech trees aged respectively 50, 100 and 150 years, and one set of which I had felled at intervals of a month, the starch stored up in the medullary rays and woody parenchyma of the last-formed but two 40–50 concentric rings remained unaffected from month to month. It was only the two newest rings that gave up a large proportion of their starch during part of summer towards the formation and development of new cells; and indeed, it is in these two last-formed rings that this reserve starch is most abundant, the quantity diminishing in inverse proportion to the age of the rings. The starch used up in spring is replaced by new starch in October, when the season of vegetation is drawing to a close. Here then we have the indisputable fact that only a small quantity of reserve matter is required for the formation of the new shoots of the year, the leaves of which are soon able to assimilate for themselves!

The erroneous prevailing belief regarding the complete dissolution every year of the reserve materials stored up at the end of the preceding season of vegetation is no doubt due to the fact that Theodor Hartig confounded with the normal process of vegetation the effect produced on the quantity of the reserve matter by the complete removal of foliage and young twigs, by girdling, &c. I had beech trees, aged respectively 50, 100 and 150 years, deprived of all their branches early in spring before any leaves had time to come out, so that not a single leaf was produced during the following summer. On the trees being felled at the close of the same season of vegetation, it was found that nearly all the reserve starch had disappeared, while the quantity of nitrogenous substances remained totally unaffected. The starch had actually been used up in forming the walls of the cells composing the new concentric ring of wood, which in the 50-year old trees attained one-twentieth of the thickness of the normal ring, and in the trees of 100 and 150 years, one-fifth of the same thickness. It is easy

* *Das Holz der Rothbuche*, Berlin, Jul. Springer, Publisher, 1888.

to understand why the quantity of nitrogenous matter suffered no diminution. We know that such substances, absolutely necessary though they are for the formation of new cells, do not constitute any portion of the cell-wall, and leave the cavity of the cell as soon as it is full-grown, in order to form new cells.

The figures given in the preceding paragraph show that under the most favourable circumstances the *total* quantity of reserve starchy matters in a beech tree from 100 to 150 years old is only just sufficient to form one-fifth of an annual ring of the usual width. How can it then be said, that wood cut in winter is heavier than wood cut in summer, especially when we remember that under normal conditions the starch stored up in all but the two last-formed concentric rings is not drawn upon at all in summer.

How the reserve starch, in a tree deprived of all its branches, disappears in order, after transformation into glucose, to nourish the cambium zone, can, it appears to me, be explained only in the following manner :—

When, under normal conditions, the cambium cells multiply with the help of formative substances brought to them by way of the sieve tubes of the liber, the cambium draws to itself and dissolves only the reserve matter in close proximity to it. But, when those formative substances fail, if, in a word, the cambium finds itself starved, then its action extends much beyond the immediately contiguous concentric rings, and it draws upon the entire reserve food stored up inside the trunk. How it does so still remains to be investigated. It may be that ferments are produced in it which, penetrating into the tissues containing the reserve food, dissolves the starch there.

I have already on a previous occasion* put forward the idea that only a small proportion of the reserve matter in trees goes towards forming the new shoots and the concentric ring of the year, and that its principal destination is to furnish the accumulated store of food, without which fructification is impossible. As soon as this accumulation attains a certain limit, the tree gets rid of it by means of a year of seed. Having thus exhausted itself, the tree must have rest for a longer or shorter period, according to the species, in order to reconstitute the quantity of reserve food necessary for the next seeding. If in any year a late frost destroys a crop of flowers, we may generally expect the following year to be one of seed, since the reserve store of food is still there intact. The more favourable

* See my work above cited

summer. One and the same tissue would thus perform different *rôles* at different seasons; from having been conducting tissue in spring, it would become storing tissue at the close of the season of vegetation. Whence the general belief that wood cut during the season of rest, in consequence of its containing its full quantum of reserve matter, is richer in nitrogenous substances, in potash, phosphoric acid, &c., and is heavier and less durable than wood cut during the season of vegetation.

In my treatise on the wood of Beech,* I have already combatted these erroneous ideas. In that book I have shown that in beech trees aged respectively 50, 100 and 150 years, and one set of which I had felled at intervals of a month, the starch stored up in the medullary rays and woody parenchyma of the last-formed but two 40–50 concentric rings remained unaffected from month to month. It was only the two newest rings that gave up a large proportion of their starch during part of summer towards the formation and development of new cells; and indeed, it is in these two last-formed rings that this reserve starch is most abundant, the quantity diminishing in inverse proportion to the age of the rings. The starch used up in spring is replaced by new starch in October, when the season of vegetation is drawing to a close. Here then we have the indisputable fact that only a small quantity of reserve matter is required for the formation of the new shoots of the year, the leaves of which are soon able to assimilate for themselves!

The erroneous prevailing belief regarding the complete dissolution every year of the reserve materials stored up at the end of the preceding season of vegetation is no doubt due to the fact that Theodor Hartig confounded with the normal process of vegetation the effect produced on the quantity of the reserve matter by the complete removal of foliage and young twigs, by girdling, &c. I had beech trees, aged respectively 50, 100 and 150 years, deprived of all their branches early in spring before any leaves had time to come out, so that not a single leaf was produced during the following summer. On the trees being felled at the close of the same season of vegetation, it was found that nearly all the reserve starch had disappeared, while the quantity of nitrogenous substances remained totally unaffected. The starch had actually been used up in forming the walls of the cells composing the new concentric ring of wood, which in the 50-year old trees attained one-twentieth of the thickness of the normal ring, and in the trees of 100 and 150 years, one-fifth of the same thickness. It is easy

* *Das Holz der Rothbuche*, Berlin, Jul. Springer, Publisher, 1888.

to understand why the quantity of nitrogenous matter suffered no diminution. We know that such substances, absolutely necessary though they are for the formation of new cells, do not constitute any portion of the cell-wall, and leave the cavity of the cell as soon as it is full-grown, in order to form new cells.

The figures given in the preceding paragraph show that under the most favourable circumstances the *total* quantity of reserve starchy matters in a beech tree from 100 to 150 years old is only just sufficient to form one-fifth of an annual ring of the usual width. How can it then be said, that wood cut in winter is heavier than wood cut in summer, especially when we remember that under normal conditions the starch stored up in all but the two last-formed concentric rings is not drawn upon at all in summer.

How the reserve starch, in a tree deprived of all its branches, disappears in order, after transformation into glucose, to nourish the cambium zone, can, it appears to me, be explained only in the following manner :—

When, under normal conditions, the cambium cells multiply with the help of formative substances brought to them by way of the sieve tubes of the liber, the cambium draws to itself and dissolves only the reserve matter in close proximity to it. But, when those formative substances fail, if, in a word, the cambium finds itself starved, then its action extends much beyond the immediately contiguous concentric rings, and it draws upon the entire reserve food stored up inside the trunk. How it does so still remains to be investigated. It may be that ferments are produced in it which, penetrating into the tissues containing the reserve food, dissolves the starch there.

I have already on a previous occasion* put forward the idea that only a small proportion of the reserve matter in trees goes towards forming the new shoots and the concentric ring of the year, and that its principal destination is to furnish the accumulated store of food, without which fructification is impossible. As soon as this accumulation attains a certain limit, the tree gets rid of it by means of a year of seed. Having thus exhausted itself, the tree must have rest for a longer or shorter period; according to the species, in order to reconstitute the quantity of reserve food necessary for the next seeding. If in any year a late frost destroys a crop of flowers, we may generally expect the following year to be one of seed, since the reserve store of food is still there intact. The more favourable

* See my work above cited.

the soil and climate are for the production of reserve food, the shorter will be the intervals at which seed years will recur for any given species.* It is a matter of observation that a warm summer is generally followed by a year of seed ; this is probably due to the production of an abundance of reserve food during such a summer. If my explanation of the *rôle* played by the accumulated reserve food in trees is correct, then the host of seeds in process of formation must exercise on the substances composing this reserve the same solvent action as the cambium deprived of its regular food.

The year 1888 was, in the neighbourhood of Munich, as over a great part of Germany, a wet and cold one, and hence not at all propitious to vegetation ; but it was one in which the beech seeded profusely. Here was then a capital opportunity of testing the truth of my conclusions formulated above. As the temperature during the year had been abnormally low, it was necessary, first of all, to determine what its effects had been on the rate of growth and on the accumulation of the reserve food in the trees, so that we might not erroneously ascribe the seeding to the effects of an unfavourable temperature. With this view, I gouged out little cylinders of wood with Pressler's borer from eight trees standing

---

* We are now able to understand why most of the trees of our plains forests, although like trees everywhere else, they seed most profusely at intervals of several years, nevertheless produce a more or less abundant crop of seed nearly every year, whereas in the temperate and alpine climate of the Himalayas a great many species, if we except a few stems here and there, do not seed at all in intermediate years. After Robert Hartig's researches it is certain that the intermediate seeding does not exhaust all the reserve materials, otherwise there would be no abnormally profuse seed years at all. This profuse seeding follows a more or less strict periodicity special to each species and to the locality in which it is growing. The case of all our species of bamboos bears out completely the learned Doctor's theory: the accumulated reserve materials of years are used up in 1-2 years in the formation of seed and the clumps die completely exhausted. The death of young fruit trees allowed to bear too early is another case in point: as such small plants contain only a very small quantity of accumulated reserve materials, the whole of this, together with the food elaborated during the season, is used up, and thus no reserve is left for the next season's growth. The Doctor's theory also explains the great precocity of our Indian trees as compared with European species: in our forcing climate the necessary reserve of stored food is accumulated in a very much shorter time and by a smaller amount of foliage. Hence the complete or almost complete advance growth we get long before our timber trees have attained exploitable dimensions, enabling us in nearly every case to dispense altogether with seed fellings (*Coupes d'ensemencement*), and giving our thinnings the character of after-fellings (*Coupes secondaries*).—[Ed.]

in a crop 50 years old, and I found that the width of the last-formed concentric ring was on an average only 86-100ths of the width of the two next youngest ones. In another crop 100 years old, composed of mixed spruce and beech, some of the beech had seeded, while the rest had not seeded at all. Six trees from amongst these latter were bored into, with the result that the width of the last-formed ring in them was found to be 82-100ths of the width of the two next youngest ones. The small cylinders of wood taken out with the borer were further examined, and showed that the quantity of starch they contained was absolutely normal, and that in the young rings of sap-wood there was as much starch as the component cells could hold. It was thus clearly proved that the cold wet summer had had no influence on the quantity of the reserve materials, but that its effect had been to reduce the thickness of the concentric ring produced to 84-100ths of the normal thickness.

Having assured myself of these two facts, without which I might have been misled into error, I next set myself to find out, in a precise manner, what influence seeding had had on the rate of growth and on the quantity of stored reserve food. With this object I gouged out, at 4 feet 3 inches above the ground, little cylinders of wood from seven seed-bearing beech trees 150 years old, and I found that the width of the last-formed concentric ring was only 35-100ths of the mean width of the two next youngest rings. In the case of five seed-bearing beech belonging to the 100-year old mixed crop, the corresponding fraction was found to be 47-100ths. Taking the mean of these two fractions, we see that the width of the concentric ring of 1887 in beech that had seeded, was to that of beech that had not seeded, as 41 : 84. The obvious conclusion is, that the process of seeding had had the effect of reducing the width of the annual ring of wood by 50 per cent.

Next I felled two beech trees that had seeded, in order to ascertain accurately their rate of growth and the distribution of the reserve materials in their trunk. In the case of the first tree, which had a diameter of 13 inches at 4 feet 3 inches from the ground and cubed 33 cubic feet, the diametral increment had been 0·23 inches in 1888 and 1·14 in 1887, the ratio being as 1 : 5. In the case of the second tree, which measured 19 inches in diameter and contained 60 cubic feet, the increments were respectively 1·12 and 1·55, the ratio being as 3 : 4. As will be seen from the figures below, which give the ratio between the widths of the rings of 1888 and 1887 measured at different heights, the former ring becomes very thin in the upper portions of the trunk.

Height at which thickness was measured.	Ratio between widths of rings of 1888 and 1887. In Tree No. 1.	In Tree No. 2.
4 feet 3 inches,	0·29	0·38
18 „ 0 „	0·38	0·33
34 „ 11 „	0·26	0·43
51 „ 10 „	0·21	0·27
69 „ 11 „	0·18	0·22

Thus, while in the lower part of the stem the thickness of the ring of 1888 is one-third of the thickness of the ring of 1887, in the upper part the ratio is very much smaller, being reduced to as little as one-fifth.

In October, when the trees were felled, all the leaves of the top of the crown had either been shed or become yellow, whereas below they were still green and fresh. This would lead us to the conclusion that the seeds, as they formed and ripened, starved the neighbouring leaves and brought about their premature death.

Examination under the microscope of the starch in the two felled trees that had seeded, and in the little cylinders of wood removed with Pressler's borer from the other ten trees, brought out this very important fact that, as a result of the seeding, the quantity of starch was reduced to one-half and even one-third of that present in the wood during the preceding year. The following table gives the proportion between the quantity of starch found in the different concentric rings of wood of the two felled trees, and that found in rings of respectively the same age in trees that had not seeded, this latter quantity being taken as unity :—

Height at which wood was examined.		Tree No. 1.					Tree No. 2.				
		Annual concentric ring of					*Annual concentric ring of*				
		1888.	1887.	1886.	1868.	1848.	1888.	1887.	1886.	1868.	1848.
Ft.	in.										
4	3	$\frac{1}{3}$	$\frac{1}{2}$	$\frac{1}{2}$	$\frac{2}{3}$	1	$\frac{1}{3}$	$\frac{1}{2}$	$\frac{1}{2}$	$\frac{3}{5}$	$\frac{1}{10}$
18	0	$\frac{1}{2}$	$\frac{1}{2}$	$\frac{1}{2}$	$\frac{3}{5}$	$\frac{2}{3}$	$\frac{1}{3}$	$\frac{1}{2}$	$\frac{1}{2}$	$\frac{1}{5}$	$\frac{1}{10}$
34	11	$\frac{2}{3}$	$\frac{2}{3}$	$\frac{2}{5}$	$\frac{3}{5}$	$\frac{2}{3}$	$\frac{1}{3}$	$\frac{1}{3}$	$\frac{1}{3}$	$\frac{2}{5}$	$\frac{1}{5}$
51	10	$\frac{5}{6}$	$\frac{5}{6}$	$\frac{5}{6}$	$\frac{2}{5}$	1	$\frac{2}{3}$	$\frac{5}{6}$	$\frac{5}{6}$	$\frac{3}{5}$	$\frac{1}{3}$
69	11	$\frac{5}{6}$	1	1	$\frac{2}{3}$	...	1	1	1	$\frac{2}{3}$	...

From the above we see that, on the whole, from a half to two-

thirds of the starch disappeared as a result of the seeding; but curiously it is the upper portions which show the largest proportion of starch still present. As it was in these portions that the annual ring developed least, it is difficult to give a satisfactory explanation of this latter circumstance. It is possible that the development of the annual ring during the months of June, July, and August was checked owing to the formation and growth of the seeds, and that during September and October fresh reserve material was deposited in the branches of the crown after the seeds had become fully formed.*

The fact that the quantity of reserve starch in a tree is reduced by a half or two-thirds in a seed-year and remains unaffected in other years, supports my view of the *rôle* filled by the reserve materials contained in the woody tissue of trees. Every year food is elaborated in excess of the requirements of vegetation, and this annual excess goes on accumulating until it is used up and exhausted all at once in a year of seed. This view is still further strengthened by the results of analyses made by me in order to ascertain the quantity of nitrogen contained in two trees that had seeded. It will be seen that this quantity, and hence the quantity of nitrogenous substances, is strongly influenced by an abundant seeding.

A beech tree 150 years old, which was felled the year before it seeded, yielded the following percentages :—

Height at which specimen analysed was taken.		Percentage of Nitrogen in					
		The Bark.	*Wood, aged years,*				
			150-120.	120-90.	90-60.	60-30.	30-0.
Ft.	in.						
4	3	0·672	0·154	0·175	0·114	0·114	0·131
18	0	0·672	0·392	0·210	0·098	0·182	0·165
34	11	?	0·294	0·210	0·172	0·141	...
51	10	?	0·210	...	...	...	...
69	11	?	0·168	...	...	...	...

* If we may make so bold as to offer a suggestion to the learned Professor, may not this greater abundance in the upper portions of the trunk be due to the reserve material being carried up with the rapid upward current of sap towards the points where they are being used up (the seeds), and continuing to stream upwards even after they are no longer required when the seeds have been fully formed?—[Ed.]

The beech tree of 150 years of age, designated No. 1 in the table higher up, and felled in the autumn of 1888 after it had seeded, gave on analysis the following results :—

4	3	0	0 042	0	0	0	0
18	0	?	0	0·056	0 042	...	...
51	10	?	0 070	...	...	...	...

The corresponding beech tree, designated No. 2, furnished the following percentages :—

4	3	0·378	0	0	0 056	0	0
34	11	?	0 070	0	0	0	0

The method of analysis employed allowed of nothing smaller than 0·001 per cent. of nitrogen being detected. The figure 0 hence merely indicates that the quantity of nitrogen was less than 0·001 per cent.

The comparative poverty in nitrogen of the trees that had seeded is so marked at all heights, and whether we consider the wood or the bark, that it is impossible not to come to the conclusion that we see here a direct relation between cause and effect.

It has been asserted that two seed years of beech can immediately follow one another. I doubt this, for such an event seems to me almost impossible of occurrence after the results established by my researches. This much may, however, be said, that if the beech in a forest has flowered, but has failed to form fruit owing to late frosts, it may flower again very profusely the following year, as the trees would then contain an ample store of reserve materials.—(Dr. Robert Hartig, in *Allgemeine Forst- und Jagdzeitung* for April, 1888).

A DEPARTMENTAL INJUSTICE.

The slowness, we may more appropriately say stagnation, of promotion in the Forest Department throughout India is notorious. Officers of 18, 19, and even 20 years' service, whose zeal and good work have been year after year publicly recognised by Government, are still vegetating as Deputy Conservators of the 3rd and 2nd grades. In such circumstances the least that our rulers can do is to keep all promotion running in the Department itself; but the Bombay Government has just perpetrated an injustice for which it can plead no extenuating circumstance. Colonel MacRae,

Conservator of Forests in Sind, having taken privilege leave, Lord Reay's Government have thought it proper to pass over all the officers of the Department and appoint a junior Civilian, a mere Second Assistant Collector, to the vacant post. It is not as if the Bombay Forest Department list contained no one fit to carry on the duties of Conservator. Not to mention half a dozen other names, we have Mr. Desai, a Deputy Conservator of the 1st grade of nearly 20 years' standing, the greater part of whose long service has been spent in Sind, and Mr. Wroughton, a Deputy Conservator of the 2nd grade of nearly 18 years' standing, who is acknowledged to be one of the best Forest Officers both inside and outside his Presidency.

The Bombay Government has most disingenuously attempted to justify its action by appealing to Rule 1 of Section V. of the Pay and Acting Allowance Code, which discourages, in the interests of economy, the transfer of officers over long distances to fill temporary vacancies. But we fail to see how any right or fair-minded person can admit the applicability of this rule in the present case. The Doctor in charge of the Residency at Katmandoo goes away on privilege leave. A globe-trotter, perfectly innocent of the art of healing, but willing to undertake anything, from holding temperance meetings to administering a Province, happens to find himself in the neighbourhood of the Residency. He is forthwith appointed Surgeon to the Residency, on the ground that Rule 1 of Section V. of the Pay and Acting Allowance Code forbids the transfer of a Medical Officer from some distant district of British territory.

Feeling that the argument based on a misreading of the Pay and Acting Allowance Code was a very unsatisfactory one, Lord Reay's Government have clutched at another straw. They have actually declared that the management of the Sind forests "makes little or no demand upon scientific forestry." We should like to know what that other forestry is, which, being a thing *sui generis*, is something quite distinct from scientific forestry. Even the timber trader's business requires special experience, which the most profound knowledge of the Indian Law Codes and Land Revenue Systems will not help a man to acquire by inspiration within the period between the appearance of a gazette notification and the assumption of his new duties. Granted, for the sake of argument, that the Conservator of Forests in Sind is the victim of a misnomer, and that he should be correctly styled Chief Timber Trader to the Bombay Government in Sind, this does not prove that the administration of justice and the collection

of land revenue has been sufficient preparation for carrying on efficiently the duties of such a post. Mr. Steele is, no doubt, a most excellent Magistrate and Revenue Collector, otherwise his Government would not have singled him out for such special promotion as they have given him; but he himself, we are sure, feels more than any one else the falseness of his position.

We have shown that, under the most favourable assumptions, the action of the Bombay Government is entirely without justification. But it is not only unjustifiable, it is also in direct contravention of the standing rules for the recruitment of the controlling staff of the Forest Department. These rules expressly lay down that appointments in the controlling staff shall be given only to specially trained men sent out by the Secretary of State, or to men already in the Department, who have deserved promotion by meritorious work. To admit any other class of recruit is an infringement of standing rules, which can only be permitted by the Secretary of State. In the present case, the Secretary of State's sanction has not been asked for. The Government of Bombay has shown itself so high-handed in the matter, so entirely above all rules laid down even for the guidance of a Government, that the only remedy against the recurrence of another injustice of this nature is to draw the attention of the Secretary of State to the present grievance, and to warn all intending candidates for the Forestry Class at Cooper's Hill that, if successful in their examinations, they are likely, towards the end of a long and arduous career, to find themselves superseded by a youthful Civilian, whose only qualification to become the head of their Department is that he is a Civilian.

We have, for the sake of argument, assumed that no professional knowledge is required to administer the Sind Forest Department. But, if the truth is to be told, there never was a province in which high professional attainments were more urgently required than in the province of Sind. Readers of the Annual Progress Reports cannot but be struck by the almost total absence of professional work shown in the account of each year's Forest Administration in Sind. We have too much in it of the cutting down of the forests and the carriage of fuel in river steamers belonging to the Department. What we urgently want now is, a thorough scientific exploration of the forest resources of the province and well-devised schemes for the systematic utilization of these resources, so that while being fully utilized, they may, at the same time, be maintained unabated, and, if possible, even extended and improved. To carry out this work requires something more than a mere

Timber Agency, to which the Government desire to reduce the Forest Administration; it requires highly trained foresters, or, in the words of the Bombay Government, "Scientific Forestry" of a very high order. That Government was ill-advised when it permitted the province to get rid of the several trained officers it possessed a few years ago. As the result of following such advice, it now finds itself obliged to confess that it has no Forest Officer in Sind, besides the substantive Conservator, who is fit to administer the forest affairs of the Province.

THE TEACHING OF SYSTEMATIC BOTANY AT THE FOREST SCHOOL.

In your issue for May, page 179, near the end of the page, you say: "As a rule, a Forest Subordinate should pass the whole of his service in a single forest region, the forest flora of which the most stupid man must learn in a very short time, if his official superiors, as we must assume, are up to their work." Now please explain this.

There are no Subordinates in the Forest service, each and all of its members are subordinate to higher authority; but from the context I take it you allude to the Executive Forest Staff, in other words, to Forest Rangers. Now these men undergo a training at the Dehra School; it is, therefore, assumed that you refer as official superiors to the School Officers, who it is hoped *are* up to their work, though were I to accept your views I should not assume, from the fact that some stupid Foresters have not learned their forest flora *in a very short* time, that such was the case.

Should you, however, refer to Officers in charge of Forest Divisions, and are under the impression that it is a part of their duty to drill flora into the heads of Rangers, stupid or otherwise, who have not so profited by their terms at the School, then mostly assured you have reckoned without your host.

GANGAJI.

EDITOR'S REPLY.—We are sorry to see that our entirely innocent remark has raised the ire of our Correspondent. We have always thought that every one in the Department knew the meaning of the term "Forest Subordinate." "Gangaji," however, ultimately reads the context rightly in supposing that the passage quoted by him refers to Rangers. Besides misunderstanding a very simple sentence, "Gangaji" has gaily soared above all the rules of logic. Here is a specimen of his syllogism—

Candidates for Rangerships receive their professional instruction at the Forest School.

Such candidates are under the orders of the Forest School authorities.

Ergo, Forest Rangers are subordinate to the School authorities!

What we meant was simply this:—The students who come to the Forest School as candidates for Rangerships do not, as a body, bring with them that amount of mental discipline, without which it is useless for them to attempt to study the classification of plants. Hence time spent in this study is for them time wasted. But their ignorance of Systematic Botany is no loss to the Department, since, as a rule, a Forest Ranger's service should be spent in a single botanical region (such a region may include the area of several Forest Divisions). On first appointment to a new region (this would generally mean on first appointment after leaving the Forest School), the Ranger must do his best to learn as quickly as possible the names of the trees and shrubs, and of some of the most characteristic herbaceous species growing in that region; and in this study he must be helped by the Officer or Officers under whose orders he is placed, and who, we have a right to assume, are acquainted with so much of the flora of their forest charge. We had no idea that our meaning would have been misunderstood, and that it would have been necessary to explain it all over again.

Whether the Officer under whom the Ranger is serving should help him in learning the principal portion of the flora of his forests is a question that, we should have thought, admitted of only one answer, and that an affirmative one. All Forest Officers appointed by the Secretary of State have to promise in their covenants that they will, to the best of their ability, instruct their subordinates in the work of their Department; and we are sure that all other Forest Officers, *pace* "Gangaji," consider the same obligation as a part of the unwritten code which they have to follow.

To judge from the latter half of his letter, "Gangaji" seems to think that the study of the flora of the whole Empire, nearly every province of which is represented at the Forest School, is so simple a matter, that the instructors there should be able to drill a knowledge of this vast assemblage of plants into the heads of their students, "stupid or otherwise," in the short period of 21 months which these men pass at the School! We devoutly wish it were so. We should then we able to count our botanists not on the fingers of one hand, but by hundreds of thousands. Leaving "Gangaji" to show us how to make the study of our vast Indian flora so simple a business, we will suggest the general introduction throughout India of a measure which will facilitate very considerably the work of foresters of all grades and classes.

In each Divisional office there should be a correctly-named and complete collection of dried plant specimens illustrating the *forest flora* of

the Division, and there should be a catalogue of this collection, giving the systematic and local names of the plants, and data regarding their distribution within the Division, and their habits, requirements, time of flowering and fruiting, &c., &c. A copy of this catalogue should be in the hands of every forest official capable of reading it. Officers in charge of subdivisions and ranges should be encouraged to form a similar collection for their respective charges, and should be given every opportunity of coming to head-quarters to study the collection there. In most cases it would, however, suffice for such officers, when they come across some species which they do not know or cannot determine, to send properly selected specimens to the Divisional office for identification.

FORESTRY IN HUNGARY.

(*Continued from page* 194).

BESZTERCZEBANYA.

On arrival at Beszterczebánya, we were at once conducted to the river Garam, to see the permanent boom, constructed for the purpose of catching the loose firewood floated down to the depôt. The boom, which is about a mile and a quarter long, consists of masonry pillars, with a wooden grating between them. This is formed by two fixed horizontal beams, one above water, and the other near the bottom of the stream, with stout movable stakes between them. The latter are placed at intervals of about 9 inches apart, and are passed through holes in the upper beam, merely resting against the lower one, and being kept in position by the weight of the water and wood pressing against them; they are given a slight slope up-stream by the projection in that direction of the lower of the two horizontal beams. A similar arrangement, which is sometimes adopted in other places, especially where the occurrence of dangerous floods at certain seasons of the year renders it difficult to maintain permanent works, is to erect, instead of the masonry pillars, heavy timber tripods, against one side of which the grating is fixed. The entire structure can then be removed at pleasure. In the present case, advantage has been taken of a convenient reach of the river, at the lower end of which are canals leading to two depôts; while at the upper end is the sluice gate, used for the passage of the rafts. The boom crosses the stream between the canals and the sluice gate; but owing to its comparatively great length, its direction is not far from being parallel to the line of the current. Great quantities of fuel come down, sometimes as much as 500,000 cubic feet being collected at one time. This accounts for the great length of the boom, which is necessary both

to enable the rafting channel above it to be kept open, and also to provide sufficient escape for the water, and thus to prevent its being dammed back by the wood, which lies in a dense mass extending down to the very bottom of the river. The log-rafts, each of which consists of about 650 cubic feet of timber, are here secured with cross pieces both fore and aft. The bed of the river is no longer rocky, and there is no necessity to give the heavy ends "play." The rafts are floated two or three together, attached with ropes one behind the other, and are thus taken down to the Danube, and thence to Buda-Pesth and Orsova. Before the heavy customs duties were instituted on the frontiers of Germany, most of the large timber from this district used to be despatched by rail for sale in that country.

Whilst we were at the boom, very little firewood was there; and some men upon a raft were engaged in fishing up sunken pieces from the bottom of the stream. Their method of anchoring themselves, by means of a pole pushed through a hole in their raft and jammed by the force of the current, was very simple and ingenious. We visited the depôt, in which there was an amazingly large quantity of firewood, most of which is there converted into charcoal for use in the smelting furnaces.

On the morning of the 13th, we left by train for Brezova, and thence drove to Ronicz, to the house of the officer in charge of the Forest Division, M. Papp. After a short halt, we went on a distance of 14 miles, to see the reservoir named Kemeny Gábor. We stopped on the way to look at a small wet slide used for the floating of firewood; it was composed, in cross section, of three pieces, the bottom one being slightly hollowed out. The spikes used for fastening the timbers together, so as to form the trough, were cut from the dead lower branches of spruce trees, sawn off close to the trunk. They answer the purpose perfectly, being almost as hard as iron. Here there is a very fine forest of spruce, silver fir, and Scots pine, the growth being rapid, and the damage resulting from storms very slight.

Some open ground, which has become denuded through excessive grazing (a very rare occurrence in these hills), has been closed with the most satisfactory result; and the contrast between the protected and unprotected portions of the valley was very striking. The torrents which had begun to form have been treated on the system adopted for such works in France. Further on, we visited a nursery of spruce, larch, Scots pine, and black Austrian pine (*P. austriaca*), and saw a number of dry fuel-slides roughly put together, their characteristic feature being that they are of an

inexpensive nature and easy to construct, so that they can be readily made wherever they are required for temporary use. The dam of the reservoir at the head of the valley, which contains 10½ million cubic feet of water, was formerly built of wood and stone, on a masonry foundation, at a cost of £3,600. But such works do not last more than about fifteen years; and recently, when the dam had to be renewed, it was made entirely of masonry, on the old foundation, at an expenditure of about £5,600. It may be said, then, that the cost of the new work was about double that of the old one; but in view of its far more lasting nature, there can be no doubt that the more costly system is the cheaper in the end. Passing beyond the reservoir, we examined the mouth of a wet slide, which is about 13 miles long, 2 feet 6 inches to 3 feet wide at top, 20 inches wide at bottom, and 2 feet deep. It is used for floating logs, and is formed of nine stems held together by wooden stakes and pegs. Three of these form the bottom, and there are three at each side, their inner surfaces, as well as those in contact, being smoothed and fitted so as to render the slide fairly water-tight; but a fresh supply of water is let in at various points. From 10 to 15 inches of water run in the trough, along the bottom of which the logs slide, aided by the current. In the afternoon we returned to Ronicz.

Next morning, the 14th, we inspected the boom or grating used for the collection of firewood at the entrance to the depôt. The water above it was full of billets of wood, a few of which were let through at a time, and passed down the small depôt canal. On their way, these were cleverly fished out by workmen armed with iron hooks mounted on long handles, with which they jerked them on to the bank. Any which escaped were caught by a second grating further on.

We subsequently visited the large iron-works, the principal manufactures turned out of which are rod-iron and gas-pipes. Many of the furnaces are heated with gas made from coal or wood. We were shown a magnificent engine of 1000 horse-power, which was put in motion, stopped, and reversed in an incredibly short space of time; and also a steam-hammer of 300 tons, the workman in charge of which exhibited his complete control over it in a variety of interesting ways.

CONCLUSION.

Our pleasant tour in the Carpathian forests being now at an end, we returned to Buda-Pesth on the evening of the 14th July. That we were enabled to see so many interesting things in such a short time was due entirely to the excellent arrangements made for

us by the Forest Officers, by whom we were everywhere received and entertained, and who spared no pains to show us as much as possible, and to afford us information regarding their work. Had it been otherwise, and without the aid of our friend M. de Lavotta, from whom we parted with sincere regret on our return to Buda-Pesth, it is certain that we could not have accomplished half of what we did; and our grateful thanks are due to the acting Director-General, M. Ronai, M. de Lavotta, and the many Forest Officers whom it was our privilege to meet. But we should imperfectly express our acknowledgments of the hospitality shown to us, if we failed to record the graceful part borne in it by the ladies, who are perfect hostesses and most accomplished housewives. To them we owe it that, in spite of the fatigues which our rapid journey necessarily entailed, our brief stay in this interesting country was rendered as enjoyable as it was instructive from the professional point of view.

It would be out of place here to enter on a description of domestic life among the Hungarian upper classes, into which we were so fortunate as to gain an insight. But it is difficult to avoid some allusion to the peasantry of the various races, Magyars, Russians, Slavs, Wallachians, Galicians, Jews, and gipsies (Czigân), we met with. A practised eye readily detects the differences between them; but even the ordinary traveller soon learns to recognise the Russian in his red cloth trowsers and embroidered jacket, his unmarried sister or daughter wearing a wreath of artificial flowers; also the Galician, with his dark woollen Polish jacket, much embroidered and adorned with orange-coloured tassels. But the people with whom we came most in contact were the Wallachians, who, in the districts we visited, do the greater part of the work in the forests, especially that connected with the rafting and floating of timber. They are a wild-looking people, dressed, as a rule, in dirty white clothes, with wide trowsers and coat sleeves, over which they wear a woollen jacket, so rough that it has the appearance of sheep skin; also a very broad and stiff leathern girdle, reaching from the hips more than halfway to the arms, and drawn together in front with four stout buckles. Their faces, and the other exposed parts of their bodies, are much sunburnt, their feet being bare or encased in cloth or leather sandals; and their long hair hangs unkempt about their shoulders. They present, at first sight, a striking resemblance to the wild tribesmen of the North-Western Indian frontier, and might easily be mistaken for them, if it were not for the straw hats worn by the men, and the skirts of the women. During the last few years there has been a formid-

able immigration of Jews into Hungary, principally from Poland and the north ; and their treatment forms, at the present time, a serious political question. They are by no means popular in the country of their adoption, where we saw quite enough of their forbidding countenances.

The Magyar peasants adopt different dresses in various parts of the country. But, as a rule, the men wear loose white trowsers, such as are worn by Afghans ; and in the districts about Beszterczebánya, the women wear a bright-coloured bodice, with short skirt, and long leather boots reaching to the knee, their hair hanging in a long thick plait down the back.

The gipsies, when seen camping in their wretched wigwams by the roadside, are not attractive objects ; but they are born musicians, and the bands of them which frequent the hotels and promenades of Buda-Pesth, playing the wild and beautiful Hungarian airs, are among the many attractions which make this one of the most delightful cities in Europe.

A visit to the Hungarian State forests is particularly instructive to the Indian forester, because the conditions in them resemble, in so many respects, those under which he has to work. There is probably no country in Europe where the export of timber by rough-and-ready means can be so well studied as it can now be in Hungary ; and if time could be found for it, a tour in the Carpathians, during the months of April and May, might be most advantageously added to the course of instruction now given to candidates for the Indian Forest service.

CHAPTER III.

A TOUR IN THE BANAT.

General Description.

The Domain of the Bánát is situated in the south-eastern corner of Hungary, between latitudes 44° 41′ and 45° 31′. Its eastern limit follows the crest of a chain of mountains, rising to a maximum height of 4,775 feet, and forming part of the eastern Carpathian range. Spurs, alternating with valleys, run westward from the high ridge, and fall with a gentle slope to the great Hungarian plain, which lies at an elevation of from 300 to 500 feet above the level of the sea ; the altitude of Báziás, on the Danube, being not more than 180 feet. Within this territory, an area of 834 square miles (of which 357 square miles, or nearly 43 per cent. are forests, and the remainder fields, meadows,

vineyards, and pastures) was conceded to a Company in 1855, together with its coal, iron, copper, and other mines, as well as the factories for working them which had already been established by the State. The Company also obtained the line of railway from Vienna to Buda-Pesth, and thence to Báziás, with the branch line to Resicza and Anina, making a total length of 723 miles; and the coal mines at Kladno in Bohemia. It at the same time purchased, from the Vienna-Raab Company, 28 miles of railway running from Vienna to Raab, and the locomotive shops at Vienna, belonging to that Company.

The Domain obtained by the "Austrian State Railway Company" has a population of 124,748, or 150 per square mile, consisting principally of Roumanians, but partly also of Bulgarians, who occupy Krassova and several villages in the neighbourhood of Oravicza, and are excellent farmers; but there are also Servians, Slavs, who are principally miners, Hungarians, Germans, Bohemians, Jews, and Czigân or Gipsies.

A portion of the cultivated land of the Domain belongs to the peasants; but the forests are the exclusive property of the Company, which also owns the pastures in all communes in which there are mines or factories, the inhabitants having the right to use them on payment of a fixed tax per head of cattle. But in the other communes the pastures belong to the landed proprietors collectively, and the Company merely takes its share as one of them. It possesses, however, seignorial rights over the whole Domain, which entitle it to the fishing and shooting, and to levy dues on the sale of alcoholic beverages, as well as on mills and markets. The three latter rights are let for about £7,600 a year. The right to shoot and fish within the forests is retained by the Company in the hands of its forest staff; but elsewhere it is farmed out on leases. In return for these rights, the Company maintains 21 churches, and nominates and pays 38 priests and 43 school-masters, at a cost of about £5,440 a year. The dominant religion is that of the Eastern Greek Church; but there are a considerable number of Roman Catholics, and a few Protestants, chiefly members of the United Greek Church, and Jews.

The central offices of the Company are at Vienna. But at Oravicza in the Bánát there is an Inspector of Works, who is charged with the construction and maintenance of communications within the Domain, including 44 miles of broad gauge, 57 miles of narrow gauge, and 38 miles of subterranean railway, used for working the mines; also 62 miles of main roads, the property of the Company, 93 miles of communal roads maintained out of funds

supplied by the communes, and numerous export roads in the forests. There is also at Oravicza an office, in which topographical and geological maps, and plans of the mines, are prepared, and rights and concessions recorded; and an Inspector who controls the forests, cultivation and pasture, over the whole of the Company's property. For the latter purpose, the Domain is divided into six districts, *viz.*:—Resicza, Steirdorf, Oravicza, Dognaczka, Bogsán, and Maldova; and over each of these is placed a Superintendent with a Forest Officer under his orders.

Since the Company obtained the concession in 1855, it has constructed 500 miles of new railway lines, and organized a navigation service on the lower Danube, to connect Servia, Roumania, and Bulgaria with its own railway at Báziás. By this means, and by the enlargement and improvement of its factories, it has quadrupled the out-turn of produce; and can now dispose of it, not only in Austria and Hungary, but also in the neighbouring countries of Eastern Europe.

The Bánát is situated on a geological basin formed principally by thick beds of the secondary groups, presenting all important ages except the trias, and lying on gneiss and mica schist. Where the secondary strata are traversed by syenite, the Jurassic and cretaceous limestone has been crystallized, and here are found the metals which constitute the principal riches of the country; they comprise magnetic iron, red and brown hematite, copper, lead, iron pyrites (from which sulphuric acid is made at Maldova), zinc, bismuth silver, and gold. A large quantity of coal is found in the Carboniferous and Jurassic groups. Considerable deposits of Tertiary formation are also met with in the basin, principally in the neighbourhood of Krassova, Tirnova, and Maldova.

The plains are covered by a deep layer of black vegetable mould, which is well suited to the cultivation of cereals, and produces excellent crops of wheat, oats, and maize. On the lower hills, where the soil is chiefly clay, are the pastures, with forests here and there, and large quantities of plum trees, cultivated, especially near Krassova, for the "raky" which is distilled from the fruit. The higher hills are as a rule covered with forest.

The plains of the Bánát are the hottest part of Hungary, the spring and summer being very warm, and marked by protracted periods of dry weather. Snow does not lie here during the winter. Great cold is experienced in the mountains, where frosts occur late into the spring, but there is much less drought than in the plains. In the exceptionally dry season of 1863, the rainfall at Oravicza (680 feet) was only 15·7 inches, while at Fránzdorf (1,770 feet) it

was 21·25 inches. The dry and cold winds from the south-east do much damage in all parts of the Domain, carrying the fine soil from the fields, overturning fruit trees, and making havoc in the forests.

Factories at Resicza.

We left Buda-Pesth on the 16th July, 1886, and traversed the well-cultivated Hungarian plain down to Temesvár and Vojtek; whence we took the branch line to Bogsán, and then the narrow gauge local railway, following the valley of the Berzáva, to Resicza, where the largest iron works in Hungary have been established.

The town stands at an altitude of 817 feet, and has now 10,000 inhabitants, most of whom are in the service of the Company, which has erected 1,200 houses for their accommodation; it has gradually grown up around the high furnaces which were first lighted in 1771, and have been working without intermission down to the present time. But since the factories were originally established, they have been very much enlarged by the addition of reverbatory and other furnaces; and since the Company came into possession, they have undertaken the manufacture of Bessemer steel, rolled steel rails, wheels for railway carriages, steel sleepers, boiler plates, girder bridges, and numerous other things. In consequence of this, the high furnace at Bogsán, the iron mines at Moravicza, and the coal mines at Doman and Székul, all of which are worked in connection with Resicza, and are connected with it by means of 38 miles of narrow gauge railway, have been considerably developed. The building timber, mine-props, and charcoal required for the Resicza factories are furnished from 66,700 acres of forest, which cover the hills to the east and south of the town.

Arriving at mid-day on the 17th, we were conducted by M. Fery and M. de Bene, two of the Company's engineers, to a point about three or four miles up the river, whence the logs of building timber, brought down from the forest on trucks drawn by horses or bullocks, are carried by rail into the town. The wood for charcoal is floated down from the forest, a distance of 28 miles, in the form of loose billets, and is caught above the town at a weir, the river behind which was at the time of our visit crammed with them. About a million and a quarter bushels of charcoal are annually made at Resicza, nearly a million and a half bushels being turned out of the kilns in the forests above Fránzdorf.

The light railway, by which we made our excursion, was constructed in 1872. Before that year, all transport between the factories and the mines at Moravicza, Doman, and Székul, as well as the furnaces at Bogsán, had to be effected over hilly roads by

means of bullock carts, as many as twenty pairs of bullocks being sometimes required to move the heavier loads. The gauge of the line is 3 feet 3 inches, and the rails weigh 11¾ lbs. per running foot. They are laid on wooden sleepers 2 feet 3 inches apart, and measuring 5 feet 5 inches × 5·9 inches × 3·9 inches. About one-third of the total length of the line is laid in a series of sharp curves of from 160 to 320 feet radius, by which it winds along the bottom of the valley up an incline of about 2 in 100. There is one tunnel 260 feet in length.

We returned from our excursion through a park, laid out by the Company for the benefit of its workmen, on the occasion of the hundredth anniversary of the opening of the works; and we then paid a visit to the Bessemer Steel Factory. The molten iron, brought from the high furnaces, is poured into a huge vessel, previously brought to a very high temperature, and through this a powerful blast of compressed air is passed. This process carries off the carbon in the form of carbon dioxide, and at the same time drives off other impurities. The metal is then poured, by means of hydraulic machinery, into moulds lined with a paste of crushed quartz; and the blocks of steel thus formed are afterwards heated and rolled into rails. The heat in the factory was terrific; but we were told that the health of the workmen does not suffer from it.

The only fuel used in the high furnaces is charcoal; and the ore is almost entirely magnetic iron of excellent quality. From 140 to 175 cubic feet of charcoal are required for the manufacture of a ton of iron, of which about 15,000 tons are turned out annually. A further supply of iron is brought from Bogsán; but the total quantity available for the Bessemer and Martin factories at Resicza is insufficient to enable them to be worked at full power. They do not make more than from 20,000 to 25,000 tons of steel per annum, though they are capable of turning out double that quantity.

In the evening we attended a *Soirée*, given in a building provided for such entertainments by the Company. The bandsmen were all workmen from the factories.

The Forests of the Domain.

The total area of the forests in the Domain is 213,905 acres, covering two extensive tracts, the most important of which lies on the mountain crests and slopes in the east and south, while the other is situated in the plains and hills around Bogsán.

On the plains and low hills the oak predominates, the species

being *Quercus Cerris*, *Q. conferta*, *Q. pedunculata*, and *Q. Robur*; but the trees are mixed with a varying proportion of wild cherry, wild plum, maple, hornbeam (*Carpinus orientalis?*) and other kinds. The oak grows higher up the southern and western slopes than it does on those having a northerly aspect, where it is replaced by beech, the principal tree of the Bánát mountains. At intermediate levels the beech is found mixed with hornbeam, ash, elm, lime, and other broad-leaved species; but at higher elevations, it is associated with conifers, the most important among them being the silver fir, which occupies considerable areas in localities where the greatest cold is experienced, notably about Fránzdorf. Here also well-grown spruce is found, and larch has recently been introduced. On the southern slopes of the mountains, where the soil is dry, Scots and Austrian pines have been planted. There are 176 species of ligneous plants in the Bánát.

The forests have all been surveyed, and maps have been prepared and reproduced by photo-zincography in the Company's offices, each Forest Officer and subordinate being in possession of a good map of the portion of forest under his charge. A valuation survey has also been effected, and the estimate of age-classes gives the following result, *viz.*:—

Crop.	Acres.
From 80 to 100 years old, and over, ...	75,625
„ 60 „ 80 years	27,407
„ 40 „ 60 „	26,428
„ 20 „ 40 „	30,059
„ 0 „ 20 „	54,386
Total, ...	213,905

Working plans have been made for the forests of each of the six districts into which the entire forest area has been divided. Near Oravicza where the soil is good, the revolution for silver fir is 100 years, and for beech 80 years; for the forests of the plains it is 60 years. But, speaking generally, for the great beech forests between Resicza and Maldova, where the growth is slow, the revolution is from 80 to 100 years. In the forests around Bogsán, where the soil is rich in vegetable mould, but at the same time dry and shallow, the revolution for oak coppice is 60 years. In this southern latitude, oak trees 100 years old give healthy and vigorous coppice shoots; and regeneration by the coppice system is consequently very easy, if the operation be properly carried out.

Two systems of felling high forest are practised, *viz.*—*clean felling*, which is adopted in forests of pure, or nearly pure, beech;

and *selection felling*, employed in mixed forests worked for large timber. The first-mentioned system is here preferred to that of natural regeneration by seed, on account of the violent storms which sweep over this part of Hungary, overturning the standards left under the latter system, and thus not only interfering with its success, but also endangering the lives of the men employed in working out wood and making charcoal in the forest. The regular system demands a larger supply of labour, which is here very limited, and it can therefore rarely be adopted. The selection method is supplemented by planting, when the crop of self-sown seedlings on the ground is insufficient; and in addition to the re-stocking of the forest after *clean felling*, a good deal is done in the way of planting up blanks and bare hill-sides.

Between 1855 and 1876, over 240 million cubic feet of wood were cut in the forests of the Domain; and of this quantity nearly 144 million cubic feet were converted into more than 73 million bushels of charcoal for use in the furnaces. In 1881, the forests produced over 23½ million cubic feet of wood, of which more than 10½ million cubic feet were converted into charcoal.

(*To be continued*).

THE MENSURATION OF TIMBER AND TIMBER CROPS.

(*Continued from page* 190).

Chapter IV.

On the Measurement or Valuation Survey of Standing Crops.

1. *The Various Methods of Valuation Survey in General.*

The most correct method of obtaining the cubical contents of an entire crop would be to cube each component tree separately, and then sum up the results. But such extremely detailed procedure is entirely impracticable, except in the case of crops of very limited extent. In practice, therefore, it is necessary to devise some much more expeditious methods that will yield results accurate enough for the purposes of the forester.

Without being guilty of any important error, we may assume that in one and the same crop trees of like diameter and height do not differ greatly either as respects cubical contents or form-factor. Hence, we may divide the component trees of a crop into classes based on equality of diameter and height combined, and find the contents of each class by selecting trees fairly representa-

tive of that class (*sample or type trees*) and measuring these separately. The average contents of the sample trees, multiplied by the number of trees composing the class, will give very approximately the true contents of the whole class.

If all the component trees of a crop were of like height, diameter and form, the measurement of a single sample stem would suffice. In reality, however, the trees of a crop are of unequal development, and must be divided into classes comprising individuals of equal diameter and height. Nevertheless, it may sometimes be possible in a more or less irregular crop to find a tree such that its contents are equal to the mean contents of all the trees comprising the crop. Such a tree we may term an *average tree*, and the method of measurement in which average trees are employed may accordingly be termed *Valuation by average trees.* Suppose c_a = the contents of the average tree, C_s = the contents of the whole crop, and n = the total number of trees, then—

$$c_a = \frac{C_s}{n}$$

It is, however, rare to find a single tree such that its contents are equal to the mean contents of all the trees of the crop; while, on the other hand, the establishment of as many classes as there are different diameters and heights present in the forest would involve enormous expenditure of time and labour. Hence the adoption of a middle course is to be recommended. Firstly, more comprehensive diameter-and-height classes should be established, each class comprising trees not precisely of one and the same dimensions, but of different heights and diameters, varying between a maximum and a minimum that are sufficiently close together to ensure the necessary degree of accuracy; and, secondly, these diameter-and-height classes being established, the average tree for each class should be obtained by calculation. For convenience' sake we may designate this method of measuring crops, *Valuation by means of diameter-and-height gradations.*

Just as the contents of a crop or of a class may be taken as the product of the number of stems and the contents of the average tree, so we may also express it either as the sum of the basal areas of all the stems (A) × the average height of the crop (H) × the average form-factor (F) or as A_s × the average *richt*-height (H_r).

We have thus three formulæ—

(i), $C_s = c_a\, n$ ... Valuation by means of the average tree.
(ii), $C_s = A_s\, HF$ ... " " average form-factor.
(iii), $C_s = \frac{2}{3} A_s\, H_r$ ... " " average *richt*-height.

For the first formula the sample stem measured must be such that its contents $= \frac{C_s}{n}$.

In using the second formula the height and form-factor of the sample stems measured must be identical with the average height and form-factor of the crop or height-and-diameter class, a condition that is more easily realized than the equality demanded for the use of the first formula.

Of the quantities A_s, H and F, the first is obtained at once by direct measurement of the diameters of all the stems taken at a fixed height above the ground; while the other two are ideal, and must be obtained as accurately as possible by computation from the measurements of the sample stems.

In those methods of valuation survey which are based on the actually measured contents of sample trees and on the measured basal areas of all the trees, a fourth formula, derived from formula (ii), may be substituted for formula (i). Using the same expressions as before, and supposing that c_t, a_t, h_t and f_t respectively are the mean contents, basal area, height, and form-factor of the type or sample trees, we have—

$C_s = A_s\, HF$ ..... Formula (ii),

and $c_t = a_t \times h_t \times f_t$ ..... by assumption;

Hence $C_s : c_t = A_s\, HF : a_t\, h_t\, f_t$

and as HF is by assumption $= h_t f_t$

$\therefore\ C_s = c_t \frac{A_s}{a_t}$ ..... Formula (iv).

Formula (iv) is to be preferred to formula (i), for two reasons: firstly, because the important and easily obtained term A_s enters into it; and, secondly, because the sample stems have to furnish only the average height and form-factor, not the average contents, of all the trees of the crop or of the diameter-and-height class, so that they need not be *average* trees in the strict sense of the word. After the measurements required to obtain the total basal areas of the trees have been taken, it only remains for the surveyor to select his sample trees properly and in suitable numbers for each diameter-height class. By suitable numbers is meant a fixed proportion of the total number of trees in the respective classes, or equal numbers in case the several classes include more or less the same number of individuals.

The sample stems are usually felled in order to determine their contents; but their contents may be obtained without felling by means of volume-tables or of previously prepared tables of form-factors.

The methods of valuation hitherto described require that every tree in the forest should be measured. But the contents of the whole crop may also be calculated by means of a sum of simple proportion, from data furnished by sample plots in which alone the trees are measured.

But measurement of every kind may even be entirely dispensed, giving place either to ocular estimation, or to estimation by comparison with results obtained in similar crops elsewhere.

The following is a synoptical view of the various methods of effecting a valuation survey of a crop :—

I. VALUATION BY ACTUAL MEASUREMENT.

A. Of every tree in the entire crop (*complete survey*).

B. Of every tree only in sample plots (*survey by sample plots*).

Whether we undertake a complete survey, or only one by sample plots, we may ascertain the contents of the whole crop—

a. By deducing it from the contents of type or sample trees, representing either—

α. The ideal average tree of the crop, or

β. The average of trees of one and the same diameter and height, or

γ. The average of trees of comprehensive diameter and height-classes (diameter and height varying between a maximum and a minimum limit), *i.e.*, *diameter and height gradations.*

Now whether we adopt method *α*, *β* or *γ*, we may obtain the contents of the sample trees either (1) by felling them and measuring them accurately, or (2) by estimating their contents standing. In either case, we may seek to ascertain one of two things, (i) the total solid contents of the trees, or (ii) separately the quantity of each class of wood or timber in them.

b. By means of the *richt*-height.

c. With the help of specially prepared tables of volumes (volume-tables) or of form-factors.

II. VALUATION WITHOUT ANY MEASUREMENTS (*eye survey*).

A. Ocular estimate, after survey either (*a*) of the whole crop, or (*b*) of sample plots.
   α. Of the number of stems of different size-classes.
   β. Of volume of material (1) per acre, or (2) standing in the whole forest.

B. Estimate based on examination of figures given in existing yield-tables prepared either—
   a. Specially for the locality, or
   b. For the forest district or region.

2. *Choice between Complete Survey and Survey by Sample Plots.*

The valuation survey of a crop by means of sample plots obviously requires very much less labour and time than a complete survey, and must therefore be adopted whenever it is likely to fulfil the objects of the survey. Its admissibility depends on three principal considerations:—

I.—*The purpose of the survey and the degree of accuracy demanded.*—The object of a survey is not necessarily always to ascertain the total contents of the crop: we may desire to know only how much material on an average there is on an acre, or we may seek to obtain figures required for the compilation of certain tables, or we may simply wish to determine the quality of the soil or locality, and so on. In all these latter cases the survey of well-selected plots, the area of which has been accurately measured, is preferable to the survey of the entire crop, which will rarely be found to be of sufficiently uniform quality and composition throughout. Moreover the area of a crop is often not exactly known. When great accuracy is required, as when the whole of a standing crop is to be put up to sale, it is of course advisable to measure at least the diameter of every tree in the crop. Still it must be understood that, in the most carefully organized and conducted valuation survey, only a limited degree of accuracy is attainable, for although the diameter or basal sections of the trees may be obtained with sufficient exactitude, the heights and form-factors of the trees can only be determined approximately. For carefully-framed working plans it is usual to make complete surveys, the procedure by sample areas being adopted only when circumstances render a complete survey difficult and at the same permit of sufficiently correct generalizations from the part to the whole.

II. *The size and nature of the crop.*—Valuation survey by sample plots is obviously admissible only in crops that are so far

uniform as to render it practicable to select certain portions presenting the average characteristics of the whole; but this method of survey is not justifiable if no time is thereby saved. Thus, if a crop is of limited extent, the whole of it can often be surveyed as quickly as a sample plot, which has to be carefully selected and then marked out and measured. So also in very open crops a complete survey is preferable, as it can be effected rapidly, and the sample plot, to represent the average of such a crop, must be comparatively large. We may lay down the following two rules for general guidance :—

1. In three cases the system of sample plots should be avoided—*Firstly*, in irregular crops of very variable density, or containing trees of very different diameter in their different parts; *Secondly*, in small crops not exceeding five acres in extent; and, *Thirdly*, in very open crops, or in crops in which only certain scattered trees, such as coppice stores, large trees in an area under jardinage, have to be accounted for.
2. In young crops or in coppice, where often 2,000 and even more stems may stand on an acre, a complete survey is quite out of the question, and sample plots should be surveyed, if there are no volume-tables available to furnish the requisite data and dispense with the necessity of any measurements.

III.—*In a certain sense, also the nature of the ground.* On gentle slopes the whole crop can be easily surveyed, but on steep or rough, rocky hill-sides, a complete survey would be difficult as well as expensive, and the adoption of sample plots would be justifiable.

3. *Selection and Demarcation of Sample Plots.*

It is hardly necessary to say that the sample plot should be as nearly as practicable a true average sample of the entire crop. Hence, before selecting it, the surveyor should go over the whole area, so that its average character may become clearly impressed on his mind.

The following rules may be laid down for observance :—

I.—No sample plot should ever be selected on the edge of the crop, for a true average will seldom be found there.

II.—On slopes presenting a wide range of elevation, or in crops offering a variety of aspects and soils, several sample plots, judiciously distributed, should be selected.

III.—The form of the sample plot should be a long rectangle.

IV.—The boundary of the sample plot should be clearly marked by blazing the trees immediately outside, or by splashing them with whitewash.

V.—The aggregate area of the sample plots should be from 3 to 5 per cent. at least of the total area of the crop.

VI.—In mature crops, no sample plot should be less than 1 acre in extent, and the minimum area should, as a rule, be 2—3 acres. In young uniform crops, containing a large number of stems, ½ or even ¼ acre may suffice.

VII.—In crops of large extent, several plots of 1—2 acres each are preferable to a single large plot.

4. *Enumeration Survey of the Crop.*

Before any attempt can be made to calculate the quantity of material in a crop, we must find out the number and respective dimensions of the trees it contains, in other words, make an *enumeration survey.* In an enumeration survey of a mixed crop, the number and dimensions of the trees belonging to each species or group of species of similar habit should be ascertained and recorded separately; all important or extensively distributed species should be registered separately, the rest being classed into groups, each group comprising species that resemble each other in height and shape.

As regards the dimensions of the trees, their diameter is always measured, the height, if that also has to be recorded, being estimated with the eye. Since in every enumeration survey an enormous number of trees has to be measured, it is not practicable to register the exact diameter of each tree, but to group the trees into diameter-gradations. The range of diameter included in each gradation will vary with the size of the trees forming the crop and with the degree of accuracy sought. For the most accurate valuation survey, the following ranges are narrow enough :—

For a crop of large trees,	..	1 to 2 inches.
" " of small trees,	..	½ inch.
" " of very small trees,	..	¼ "

Supposing 1 inch has been fixed as the range, then every tree above 5½ inches, but not more than 6½ inches in diameter, will be classed as being 6 inches in diameter; every tree above 6½ inches, but not more than 7½ inches in diameter, will be classed as being 7 inches in diameter; and so on—that is to say, all fractions not exceeding one-half will not be taken into account at all, and all fractions exceeding one-half will be considered as 1.

And so on with any other diameter range. Here, in India, a diameter range of as much as 6 inches, established by Sir Dietrich Brandis in Burma in 1859, has been made use of in most of our working plans, and has been found to give sufficiently accurate data for the classes of forest we have to work, and for the rough methods of working them we are obliged to adopt.*

In crops consisting of fairly regular-shaped and not very large trees the measurement of a single diameter may suffice, especially if, as tree after tree is gauged, the diameters of two successive trees are measured in different directions, more or less at right-angles to one another. Although a matter of petty detail, it is necessary to say that the callipers should be applied to the trunks of the trees properly, and the diameter read off *before* they are removed. The diameters should be all measured at breast-height, and on hill-sides this height should be taken on the upper side of the slope. Breast-height has been assumed to be 4¼ feet; but as the boles of trees do not taper either regularly or very rapidly, it is not necessary that this height should be exactly measured on the tree before the calliper is applied. Sufficient accuracy is attained if the measurer is careful to hold the calliper at the height of his chest and the diameter is measured at any height between 4¼ and 5 feet. When a tree divides into two or three main stems near the point at which the calliper should be applied, each stem should be measured separately.

The enumeration survey should be effected over successive narrow strips, each strip being gone over once and in a direction opposite to that in which the immediately preceding strip has been surveyed. On steep slopes it is convenient to run the strips horizontally and to begin at the bottom of the slope. The measurers, furnished with callipers, gauge the diameter of the trees and call out the figures read, which are at once noted in a properly-ruled field-book by the recorder, who is usually himself the surveyor in charge of the party. The number of measurers that can keep one recorder fully employed depends on the density of the forest, on the nature of the ground, on whether he is also in charge of the party, and on whether all or only certain classes of the trees composing the crop are to be measured. The number of measurers may thus, according to circumstances, range from 2 to 6, and even 7 and 8.

As the survey progresses the trees measured are immediately marked with a clearly visible blaze, which should not, however, be deep enough to expose the wood. In order to make the blaze, each measurer should be provided with a light short-handled axe. The

blaze should be made on the side opposite the area still remaining to be surveyed, so that when the next strip is being surveyed the men can at once recognise up to what point the strip just completed extends.

The duty of the surveyor in charge of the party is to see that the callipers are properly applied, the diameters read before the callipers are removed, and the blaze made on the correct side. When a division into height-classes is necessary, the surveyor has also to judge with his eye the height-class of each tree as it is gauged. Hence the advisability of investing one and the same person with the duties of both surveyor and recorder.

The following is a sample of a convenient form of field-book—

RANGE ..... COMPARTMENT .....

BLOCK .....

Diameter in inches at breast-height.	Species ..... (or Height-Class).					Number of trees.	Total basal area, in square feet.	Diameter in inches at breast-height.	Species ..... (or Height-Class).					Number of trees.	Total basal area, in square feet.
10	𝍸 𝍸 𝍸 𝍸	𝍸 𝍸 𝍸 𝍸	///			43	23·453								
11	𝍸 𝍸 𝍸 𝍸	𝍸 𝍸 𝍸 𝍸	𝍸 ///			48	31·678								
12	𝍸 𝍸 𝍸 𝍸	𝍸 /				26	20·420								
13	𝍸 𝍸 𝍸 𝍸	𝍸 𝍸 𝍸 𝍸	𝍸 𝍸 𝍸 𝍸	//		62	57·149								
14	𝍸 𝍸 𝍸 𝍸	𝍸 𝍸 𝍸 𝍸	𝍸 𝍸 𝍸 /			56	59·865								
15	𝍸 𝍸 𝍸 𝍸	𝍸 𝍸 ////				34	41·724	and	so	on					
16															

As the diameter of each tree is called, a stroke is made in one of the compartments opposite the figure expressing that diameter. The first four strokes are drawn upright, the fifth one obliquely across them. Each group of strokes thus represents five trees of the diameter against which it is drawn. Each full compartment represents 20 trees, and the whole line of five compartments 100

trees of one and the same diameter-class. After the survey is over, the total basal area of the trees of each diameter-class is calculated and entered in the proper column. Lastly, the numbers of the trees and the basal areas are totalled up.

Perhaps a more convenient method of recording the number of trees is the one universally employed in France. It is as follows :—Each group, representing 10 trees, consists of two upright rows of four dots each, joined by two diagonal lines, which represent respectively the ninth and tenth trees, thus—

⁜ = 10; ⁝⁝ = 9; ⁝⁝ = 8; ⁝⁝ = 7; ⁝⁝ = 6;

and so on.

The subjoined form of field-book has been in general use in the North-West Provinces and Oudh for more than ten years, and can hardly be improved upon for enumeration surveys in which the classes include a large range of diameter and the forest is very irregular. Some of its advantages are (i) that it requires very little ruling, (ii) that it may be easily prepared from day to day by the recorder himself, and (iii) that, as the width of its different columns and compartments can, for that reason, be varied to suit the composition of the crop to be surveyed, a whole day's work, comprising several thousand trees, can be got into a single opening of the book. The total number of trees of each species (or group of species) and diameter-class is written in the right hand lower corner of its own compartment.

FOREST ..... BLOCK ..... COMPARTMENT .....

Species.	*Number of trees of diameter exceeding*				Total number of trees.
	6 inches, *but not exceeding* 12 inches.	12 inches, *but not exceeding* 18 inches.	18 inches, *but not exceeding* 24 inches.	24 inches.	
Sál,	⁜⁜⁜⁜⁜ and so on. 1,689				
Sain,					
Chir,					
Miscellaneous,					

5. *Valuation Survey by means of the Average Tree.*

The average tree, according to our assumption, is that tree whose height and form-factor are the same as the average height and form-factor of the crop, considered as a whole.

In order to obtain the average tree we must first of all determine what its diameter is. This we shall know, if we know its basal area. If c_a, a_a, h_a, and f_a, represent respectively the contents, basal area, height and form-factor of the average tree, then—

$$c_a = a_a\, h_a f_a;$$

But by formulæ (i) and (ii),

$$c_a = \frac{C_s}{n} = \frac{A_s HF}{n};$$

Therefore $a_a\, h_a f_a = \frac{A_s HF}{n}$

and $a_a = \frac{A_s}{n}$ (since by hypothesis $h_a f_a = HF$).

That is to say, the average tree is that tree whose basal area is the average basal area of all the trees of the crop. This being so, we can find out the diameter of the average tree as soon as we know the number of stems composing the crop and their total basal area. Having obtained this diameter, we fell and cube several trees of that diameter, and the mean contents of these trees will be the contents of the average tree.

To obtain the above result, we have to assume that $h_a f_a = HF$. This assumption is, however, true only when (1) the heights and form-factors of all the trees in the crop, or, at least, the products of their heights and form-factors are equal, (2) these heights and form-factors, or, at least, their products, are proportional to the corresponding basal areas, and (3) the mean of all these heights and form-factors may be taken respectively as the height and form-factor of the crop as a whole. These three conditions can obtain only in very regular crops, and even in such crops as many as three or four of the trees of the average diameter must be felled and measured in order to obtain a sufficiently close average for the contents of the average tree.

Resumé.—When this method of valuation survey can be adopted, the following procedure should be followed :—Measure and register the trees in diameter-gradations embracing a range of ½ inch. Then, with the aid of tables, calculate the aggregate basal area of the trees in each class, and total the whole. Divide this total by the number of trees, and the quotient will be the basal area of the average tree. From this deduce the diameter of such tree. Lastly, fell several type trees of this diameter, and find out their contents

accurately. The mean of their aggregate contents will be the contents of the average tree, and this multiplied by the number of trees in the whole crop, or, which comes to the same thing, by the ratio of the total basal areas to the basal area of the average tree, will give the contents of the crop.

(*To be continued*).

SUPPLY OF *BAMBUSA ARUNDINACEA* SEED.

I AM extremely sorry for any delay which may have occurred in sending bamboo seed to my numerous applicants, but my transfer to another district has been the cause.

I have forwarded applications to my successor, who I have no doubt will meet all requirements, as the supply of seed is practically unlimited, and I had collected nearly 400 seers before I left.

To save any further delay all future letters should be addressed to

The Sub-Assistant Conservator,
No. I. Range, Anamalai, S. Coimbatore.

TINNEVELLY. J. G. F.-M.

SIMPLE CURE FOR SCORPION STING.

IN these days of heat and consequent insect activity it may be useful to mention a certain and immediate cure for scorpion sting which I have employed successfully for some years, on the last occasion only a few days ago. Immediately on being stung, bind a ligature tightly above the wound and apply to it a minute drop of strongest carbolic acid. The ligature can be removed in ten minutes, and there will be no subsequent pain or swelling. Delay or impracticability of applying a ligature of course renders this plan useless. I am not aware if there is any special virtue in the carbolic acid, or whether any other caustic would serve the purpose, but I have used the carbolic acid of commerce with success, and this is not a very powerful caustic.

EYED HOOKS.

NOTE.—We regret that want of space prevents us from inserting in this Number our account of the man-eating tigress of Mundáli, which every newspaper reader in India knows has at last been killed, thanks to the pluck and good shooting of our young colleague Mr. B. B. Osmaston.

II. Timber Market.

STATEMENT OF AVERAGE SELLING RATES FOR THE QUARTER ENDING 31st MARCH, 1889.

At Meerut.

	RS. A. P.		RS. A. P.
Sál 10′ tors (poles), per score, from	10 0 0	to	20 0 0
Sál karis, 12′ × 5″ × 4″ „ „	25 0 0	„	40 0 0
Sál bed-posts, 7′ × 2½″ × 2½″ „ „	7 8 0	„	12 10 0
Bamboos of 9′ to 10′, per 100 score, „	25 0 0	„	80 0 0

At Cawnpore.

Sál 10′ tors (poles), per score, from	6 8 0	to	7 0 0
Sain karis, 12′ × 5″ × 4″ „ „	12 0 0	„	14 0 0
Sál bed-posts, 7′ × 2½″ × 2½″ „ „	5 0 0	„	5 8 0
Bamboos of 9′ to 10′, per 100 score, „	30 0 0	„	50 0 0

At Bulandshahr.

Sál 10′ tors (poles), per score, from	0 0 0	to	0 0 0
Sál and sain, &c., karis, 12′ × 5″ × 4″, „ „	0 0 0	„	0 0 0
Sál bed-posts, 7 × 2½″ × 2½″ „ „	0 0 0	„	0 0 0
Bamboos of 9′ to 10′, per 100 score, „	60 0 0	„	65 0 0

At Pilibhit.

Sál 10′ tors (poles), per score, from	40 0 0	to	70 0 0
Sál karis, 12′ × 5″ × 4″ „ „	30 0 0	„	40 0 0
Sál bed-posts, 7′ × 2½″ × 2½″ „ „	5 0 0	„	6 4 0
Bamboos of 9′ to 10′, per 100 score, „	60 0 0	„	100 0 0

C. Bagshawe,
Conservator of Forests,
Central Circle, N.-W. P. and Oudh.

A Popular Forest Officer.—On the 4th instant there was a large gathering of the members of the Ambasamudram Reading Room, including the Singumputty Zemindar, the District Munsiff, the Tahsildar, members of the bar, and several influential ryots, to take leave of Mr. Samuel Moss, the Forest Officer, who was under orders of transfer to the Coimbatore District. After a few sets at tennis, tea and fruits were served to Mr. Moss, after which he was decked with garlands of flowers, and a few parting words brought this pleasant gathering to a close.—(*Madras Mail*).

III NOTES, QUERIES AND EXTRACTS.

THE PRESERVATION OF GAME IN THE CENTRAL PROVINCES.—It is only in uncivilised countries where game and free shooting can for any length of time coexist. Even in Central Africa the elephant, lion and hippopotamus are disappearing rapidly wherever the European hunter can penetrate; and the total extinction of the American buffalo, which has been seen in millions by men not middle-aged, is a perpetual example of what happens without preservation when railways are introduced. Within the experience of many Officers still in the Commission, the jungles of the Central Provinces were practically inaccessible to the outer world. It is barely more than twenty years since the lion was shot in the then unexplored jungles between Jubbulpore and Allahabad. Pachmarhi was still a collection of native huts, and the surrounding peaks the resort of herds of bison, which were only disturbed on the occasional visits of the Forest Officer. Mandla was more difficult to get at than the remotest parts of Chhattisgarh will be in another few months when the new railway has been carried through into Bengal. Hitherto the shooting grounds of Raipur and Sambalpur, so contiguous on the map to Calcutta, have been as remote from it for practical purposes as the Pir Panjal. With the opening of the new route crowds of sportsmen from Calcutta may be expected to take advantage of this new extension of their hunting grounds. And in addition to the numbers of Indian sportsmen, any one of whom may now with a few weeks' leave penetrate into every corner of the Provinces, it must be remembered that the number of shooters coming out from England is increasing and will yearly increase. If these latter have not yet embarked much on shooting tours on their own account, it is because they are in the habit of entrusting themselves by preference to Indian friends or native notables; but as the swarm of travellers increases private entertainment will become less and less equal to the demands of the visitors, and they will be taking in greater numbers to expeditions on their own account. A renowned sportsman spends winter after winter shooting in the Central Provinces, and others will be sure to follow the example before long, sending up the prices of *shikâris*, beaters, and all camp services for their poorer Anglo-Indian fellows. We do not suggest that the Governments here should follow the example of a

Canadian province, which has recently put the globe-trotting sportsman under a complete ban by a law that no one shall shoot who has not been in residence for three months, but it is a salutary principle that such persons should have to contribute something for an amusement that they would pay for anywhere else, and we should like to see the Government extend it by putting into force a reasonably heavy game license all over the country.

This, however, is in the nature of a digression, and there are obvious difficulties in the way, to discuss which would take us too far from the present subject. And after all the big game of the Central Provinces, aided by the protection which the monsoon affords them, would probably hold out for a century to come against the fair hostilities of English sportsmen. But those who treat the rules simply as a matter for the concern of this class must be strangely ignorant or forgetful of the conditions of the case. The present Chief Commissioner, it is well known, has insisted on a most liberal construction of the Arms Act. He has instructed his District Officers, in terms which leave them no option, that every respectable native who applies for a license to carry a gun is to have one. The consequence has been an increase in the number of firearms among the people, which has not yet had time to become manifest in the reports, but which is perfectly phenomenal. The new rules had not been working for three months when many Deputy Commissioners began to foresee the extinction of the Central Provinces as a shooting country in a very few years. In this part of the country it must be remembered every man is by nature a *shikári*. He knows perfectly the habits of the wild animals, and if he cannot approach them will sit up night after night at their watering places, and as he has no thought of the future supply and spares neither age nor sex, the result is necessarily disastrous. In a district like Chindwarra, where the water-supply is scarce and the deer must come to drink at a few well-known spots, the result is extermination. To the native this watching means amusement, food and profit, and it is no wonder that he pursues it to the bitter end. For the dangerous beasts there are the Government rewards which, together with the increasing value of the skins, have been enough to bring the European trapper and his spring guns upon the scene. Both are a good deal more dangerous to the community than the tigers they are encouraged to go after. One of these trappers in Mandla, a year or two ago, is reported to have ineffectually wounded five tigers before his operations were brought to a stop by his partner being killed in following up a sixth; while it is notorious that the

native *shikári* is responsible for the creation of nine-tenths of the man-eaters that from time to time become scourges of the country.

Truly the large game of the Central Provinces is being hard-pressed on every side. The wild buffalo, once abundant in the Nerbudda Valley, can hardly be said to exist north of the line of the new railway, though a few herds may yet remain in Balaghat. The beautiful red deer, which in the days of Captain Forsyth were plentiful within a day's march of the station of Mandla, are now rarely met with in the depths of the sâl forests of Toplah and the Bunjar Valley. On the higher Nerbudda, where the same most accurate writer says that a bad shot would often bag five or six spotted deer stags in a morning, the difficulty now is to see a tail. Who will tell us if the wild elephant is still to be seen in the north-east of Bilaspur or whether the tradition only lingers? Mr. Mackenzie has acted with great wisdom in supplementing his action in the matter of gun licenses with another measure of a conservative character, a measure which is most truly in the interests of the English sportsman, for without something of the kind a few years would assuredly have seen his amusement gone. It only remains for other Local Governments to ponder the example of the Central Provinces with a view to the general introduction of an effective game law.—(*Pioneer*).

THE UTILITY OF THE COCOANUT PALM.—When the Singhalese villager has felled one of these trees after it has ceased bearing (say in its seventieth year), with its trunk he builds his hut and his bullock-stall, which he thatches with its leaves. His bolts and bars are slips of the bark; by which he also suspends the small shelf which holds his stock of home made utensils and vessels. He fences his little plot of chillies, tobacco, and fine grain with the leaf-stalks. The infant is swung to sleep in a rude net of coir-string made from the husk of the fruit; its meal of rice and scraped cocoanut is boiled over a fire of cocoanut shells and husks, and is eaten off a dish formed of the plaited green leaves of the tree, with a spoon cut out of the nut-shell. When he goes a-fishing by torchlight his net is of cocoanut fibre; the torch, or *chule*, is a bundle of dried cocoanut leaves and flower stalks, the little canoe is a trunk of the cocoanut palm-tree hollowed by his own hands. He carries home his net and his string of fish on a yoke, or pingo, formed of a cocoanut stalk. When he is thirsty, he drinks of the fresh juice of the young nut; when he is hungry, he eats its soft kernel. If he has a mind to be merry, he sips a glass

of arrack, distilled from the fermented juice of the palm, and dances to the music of rude cocoanut castanets ; if he be weary he quaffs "toddy," or the unfermented juice, and he flavours his curry with vinegar made from this toddy. Should he be sick, his body will be rubbed with cocoanut oil, he sweetens his coffee with *jaggery*, or cocoanut sugar, and softens it with cocoanut milk ; it is sipped by the light of a lamp constructed from a cocoanut shell and fed by cocoanut oil. His doors, his windows, his shelves, his chairs, the water-gutter under the eaves, all are made from the tough wood of the tree. His spoons, his forks, his basins, his mugs, his jars, his child's money-box, are all constructed from the shell of the nut. Over his couch when born, and over his grave when buried, a bunch of cocoanut blossoms is hung to charm away evil spirits.

It would seem, however, as if the list is not yet exhausted, for we are now told that after the stem and the leaves have been utilized in the various methods mentioned, after the fruit and the husk have been requisitioned for the use of mankind, that which remains—the refuse dust—is valuable in many directions.

Some time ago we saw a notice that the French Government had made an important discovery—one that would revolutionize the ship-building trade, and was especially applicable to war vessels.

It consisted in the casing of ships with a thick backing of coir refuse tightly compressed, which it was stated, not only gave an enormous buoyancy to the vessel, but was a very valuable adjunct to her protective armour, both from the enormous resistance possessed by the coir, and in the difficulty said to be experienced in puncturing it with shot. for holes thus made are said to close up again as soon as made.

Whether in practice this will be found to be the case or not we cannot of course say, but the imaginative conception of French scientists is great, and the application of coir dust or refuse in this particular manner may have nothing practical about it after all. We have only called attention to the matter to illustrate the wide range of uses to which the produce of the cocoanut palm can be or is likely to be applied. The chief qualities possessed by coir dust are that it is a great absorbent, being capable of absorbing *three times* its own weight of water, and that it contains a large quantity of tannin. Both these attributes make it valuable from a sanitary point of view and as a deodorizer it is unrivalled, coming more generally into use yearly both by Hotels and Hospitals.

Its general adoption in private houses would be beneficial in many ways, especially when the dry earth system prevails.

The value of coir as manure has yet to be fully investigated, but

in England it is already largely utilized by market gardeners for breaking up and lightening clay and other heavy soils. It should also increase the hygroscopicity of naturally dry soils, and help in keeping the underlayers of soils cool in the hot weather and warm in the cold weather.—*(Pictures from the East).*

A WHITE ANT POISON.—Take of common aloes (*Aloe vulgaris*) called by the native *clethale*—a quantity, and extract the juice by passing the leaves through an old mangle or any such contrivance, first having placed a trough to catch the juice in ; now boil the substance so extracted to a creamy consistency by adding six ounces of pounded camphor to every gallon of juice ; then having excavated your white ant hills to a depth of about a foot or two, pour in a quart of the stuff, taking care to cover as much space as possible, fill in the excavation and leave the ants to their fate. This preparation is extensively used in America for destroying the various insects, and it is said that coffee borers and other vermin of that species that attack plants succumb to it marvellously. In these cases it is mixed largely with water, and sprinkled on the leaves of the tree so attacked through a garden pump or watering can. Aloe juice is also used to preserve wood which has in any way to float or be submerged in water, by mixing it with the preparation of white lead used to paint the article. As an authority for this, I quote a part of the article on aloes in the *Encyclopædia Americana*:—"The juice of the aloes was formerly used in Eastern countries in embalming, to preserve dead bodies from putrefaction ; and, as the resinous part of the juice is not soluble in water, it is sometimes adopted, in hot climates, as a preservative to ship bottoms against the attacks of marine worms. One ounce of it mixed with turpentine, tallow and white lead is considered sufficient for covering about two superficial feet of plank, and about 12 lbs. is sufficient for a vessel of 50 tons burden. In proof of the efficacy of this method, two planks of equal thickness, and cut from the same tree, were placed under water, one of them in its natural state, and the other smeared with this composition. They were suffered to continue in the water eight months, and when, at the end of that time, they were taken out, the former was perforated in every part and in a state of absolute decay, whilst the latter was as perfect as at first. In the East Indies the juice of these plants is used as a varnish to preserve wood from the attacks of destructive insects ; and skins and even living animals are sometimes smeared with it for the same purpose."—(*Madras Mail*).

REVISION OF THE FOREST LAWS.—We commend to our legislators the following extract from the "Madras Mail":—

"In the Revision Criminal Case heard by Sir Arthur J. H. Collins, Kt., Chief Justice, and Mr. Justice Parker, on the 14th September, 1887, the question raised was whether the mere removal of leaves from classified trees on unreserved land does not constitute a breach of Rule 12 of the Madras Forest Act, 1882. The case was referred, under Section 438 of the Code of Criminal Procedure, by Mr. J. W. Best, Sessions Judge of South Canara. The facts appear from the following judgment of the Court:—

"*Judgment*—The question raised by the Sessions Judge in this reference is one of great public importance, and we cannot but express our surprise that the Public Prosecutor, to whom notice was sent by the special order of this Court, should not have been instructed to appear. The Deputy Magistrate, on appeal, has confirmed the conviction of the accused, observing that their offence consisted of cutting plants and leaves of classified trees for the purposes of manure. Had the evidence established the offence of cutting plants of classified trees, the conviction might apparently have been sustained on that ground, but we observe that the Second-class Magistrate convicted the accused only of removing leaves of classified trees from unreserved land, and the evidence would seem to indicate that all they did was to remove the leaves and not to cut the plants. Rule 12 (for the breach of which the accused have been convicted) makes it unlawful for any person to fell, girdle, mark, lop, tap, uproot, or burn, or strip off the bark or leaves from or otherwise damage any tree growing on reserved or unreserved land; but this prohibition is subject to the privileges, exceptions, and reservations specified in Rules 7, 9 and 10. Rule 7 provides that in all unreserved lands the villagers shall continue to enjoy, free of charge, such privileges as they have hitherto exercised in the way of grazing cattle or of cutting, converting, and removing trees (other than reserved and classified trees) and timber and other forest produce for fuel or for building or agricultural or domestic purposes. It is observed that the words 'other than reserved or classified trees' in Rule 7 have reference only to the cutting, converting, and removing of trees, not to the removal of other forest produce for fuel or agricultural or domestic purposes. There is no finding that the leaves were stripped off in such a manner as to damage the trees from which they were cut, and the mere removal of leaves from classified trees would not alone appear to constitute a breach of the two rules when read together. It may be that the Deputy Magistrate confirmed the conviction under the impression that the accused were guilty of cutting the plants of classified trees, but this was not the offence charged against them. We shall therefore set aside his order, and direct that the appeal be reheard, after giving notice both to the appellants and to the Public Prosecutor at Mangalore.

"The Acting Conservator of Forests, Southern Circle, in September, 1888, in an endorsement on the above, and forwarding it to the District Forest Officer, South Canara, through the Collector, requested that he would report why the Government Pleader was not retained to argue the case, and asked what was the result of the rehearing. Mr. S. H. Wynne, Acting Collector of South Canara, in reply, said that 'when notice came to me of the reference, the Magistrate's calendar had been returned to him. I therefore directed the Deputy Magistrate to send it up to me again, that I might judge of the necessity for an appearance on behalf of the Crown. The calendar had, however, been mislaid, and as the records had been already sent to the High Court, I had nothing to refer to. I therefore called on the Deputy Magistrate to state from his recollection of the case whether the appearance was called for or not. He replied that as the matter turned on the interpretation by the High Court of a short rule, the appearance of the Government Pleader was unnecessary. I concurred, and no appearance was therefore made. I may add that, with all deference to the Judges of the High Court, I am still of opinion, knowing now all about the case, that no good purpose could have been served by an appearance on behalf of the Crown. The result of the re-trial of the appeal was that the conviction was again confirmed.'

"The Acting Conservator of Forests, Southern Circle, in an endorsement, dated the 20th October, said:—

"'Under the High Court ruling in the above, it would appear to be no offence in South Canara to take the natural produce of a reserved or classified tree standing on unreserved land, so long as the tree itself was not cut, converted, or removed. The High Court also appear to read the words in parenthesis, 'other than reserved and classified trees' as referring only to trees, and not to timber and other forest produce. If, as the Acting Conservator believes, the intention was that all the freedom under this rule applied only to produce that was to be used solely for agricultural and domestic purposes, and that the produce and timber of reserved and classified trees, as well as the trees themselves, were to be excepted, it may be necessary to alter the rule so as to make that intention clearer.'

"In a Resolution of the Board of Revenue, dated the 23rd January, last, it was remarked:—'The interpretation put upon the rules by the High Court seems to the Board to be the only interpretation possible under their present phraseology. It is the same as that given by the Acting Conservator. In the face of the evident meaning of the Rules, the Board do not think that they could have been framed with any other intention than that which they express. If the Conservator, after inquiry, considers a change in the Rules necessary, he should submit his proposal for orders.' The Government agrees with the Board of Revenue."

BENGAL SECRETARIAT LIBRARY

THE

INDIAN FORESTER.

Vol. XV.] July, 1889. [No. 7.

A NEW VIEW OF JARDINAGE.

I was much surprised in reading the March Number of the "Forester" which, in an article entitled "A new view of Jardinage," contained a severe but unmerited attack on the teaching of the Nancy Forest School. What surprised me most was, that the School was credited with having taught doctrines which were certainly not taught in my time (1880-82). As I was not in a position to say whether such doctrines were propounded previous to 1880, I sent M. Broilliard a copy of the "Forester," and the article now enclosed is the translation of his reply, which he requested me to translate and forward to you for publication.

This is the first occasion on which I have seen it stated that the teaching at Nancy was illiberal and bigoted, forestry and forest management are perfectible sciences (to quote Bagneris), and Broilliard himself admits that the *mode des éclaircies* is hardly out of its infancy. During our tours in the Vosges mountains Broilliard, Bagneris and others, impressed on us how eminently suitable a system was the jardinage method as applied to these and other hill forests. It was no question of mere theory in France: different forests were visited, the methods of treatment explained, and we were able to see for ourselves whether the forests had been properly treated or not. As for the *mode des éclaircies*, that it is the method *par excellence* for forests in the plains no one will deny who has seen the forests of Haye, Villers Cotterets, &c.: but Broilliard and Bagneris never taught that it could be applied everywhere, and a forest was shown to us in the Vosges (if I remember rightly), which had been severely injured by changing the treatment from jardinage to the *mode des éclaircies*, the situation, &c., not being adapted to the latter treatment.

Messrs. Broilliard, Bagneris, &c., are accused of teaching the unrivalled excellence of the so-called natural method by simply disparaging every other; and an attempt is now being made to preach the unrivalled excellency of the new jardinage and group theories by making incorrect statements about the teaching of the French School.

COIMBATORE, *15th May, 1889.* } H. J. PORTER, *Deputy Conservator of Forests.*

[TRANSLATION].

AN article in the March Number of the "Indian Forester" contains two interesting statements: the first being, that the Nancy Forest School taught what was known as the *Natural Method* (*Méthode Naturelle*); the second, that Dehra Dún is in possession of *the true Natural Method.* As I cannot say which of the above statements surprises me most, I hope that the Editor of the "Forester" will allow me to explain my views on the subject to his readers.

Judging from what the author says about the teaching of the Nancy Forest School, it would appear that his knowledge on that point, at any rate, is superficial. Parade, Nanquette, Bagneris and Broilliard, who are credited with having taught "the unrivalled excellence of the Natural Method by disparaging every other," each published books containing the pith of what they taught at the School. They all discuss the *Méthode du réensemencement naturel et des éclaircies* (spontaneous reproduction and thinning method), but the word *réensemencement* (reproduction) is not synonymous with *méthode*, and the only way to get at *méthode naturelle* is by leaving out two words. In my Forest Management treatise (*Cours d'aménagement*), which Mr. Fernandez has translated into English under the new title of "Forest Organization," the above method is termed *Mode du réensemencement naturel et des éclaircies*, and more simply still *Mode des éclaircies.* What does the word *naturel* refer to? The reproduction of course and nothing else, and the Nancy Forest School is proud of never having deviated from these two fundamental principles, *viz.*, to ensure natural reproduction, and obtain the most useful material.

Speaking of jardinage in his Manual of Sylviculture, Bagneris says, "of methods employed for treating forests as 'High forests,' jardinage is the one which follows most closely the action of Nature." In my Forest Management treatise I have used the defi-

nition given in the "Culture des bois," *viz.*, "a method of treatment which consists in felling here and there the oldest trees those which are unsound, dry or past maturity, and others which, though perfectly sound, are required to meet the demands of the proprietor;" and I go on to say, "Pure forests of silver fir, and of spruce and mixed forests of spruce and beech have been treated on the jardinage method as defined above, and often with good results." To justify the above definition of jardinage, and to satisfy oneself as to the good results obtained by felling here and there the oldest and least vigorous trees, the best way is to watch experienced guards selecting trees to be felled in a pine forest. In the chapter relating to *Conservation du jardinage* (cases in which the jardinage treatment must be retained), in my *Cours d'aménagement* I say, "In forests of pine and larch several trees should be cut together in one place, by uncovering a small area of say 2 or 3 ares ($\frac{1}{15}$th acre), so as only to open out the forest here and there by means of a *coupe d'ensemencement* (seed felling) executed in several places at the same time.

In the same work I have also stated that in France some hundreds of thousands of hectares of forest must continue to remain under the jardinage treatment.

Such was the teaching of the Nancy Forest School from 1865-1881.

Since then several new jardinage theories have been started in different parts, but I should say that the majority of those who originated them have never superintended a jardinage felling. As a rule, what they propose is a system something between jardinage and the *mode des éclaircies:* it is only natural that every one should think his own geese swans, and no harm is done. But these different systems are more artificial than natural. Nature does not produce systems. Satisfactory and true methods for treating forests are the result of experience gained by observing facts, (*experientia rerum*).

Although nearly a century has elapsed since systematic thinnings (*éclaircies*) were first made, the *mode des éclaircies* has hardly passed its infancy. The method, as carried out, has not even yet established the necessary order in the fellings.

Like jardinage, however, its essential points are natural reproduction and the maintenance of a continuous cover (*massif*); so also the trees get sufficient room and attain the biggest dimensions. In Europe, at any rate, it answers very well; it is quite probable that the application of the method will be improved

upon ; but I am of opinion that it is well suited to the temperate climate of France.

As I am not acquainted with the forests of India, I can only wish good luck to the *Gruppen und horstweise Schirmbesamung*, which is to prove "Nature's own method," so says Mr. Fernandez in the account which he gives of it under the name of the "Group Method," in his Manual of Indian Sylviculture, a copy of which he has been good enough to send me. The method (group) without the *Schirm* approaches jardinage as applied to pine and larch, and in spruce forests it reminds one of the transformation fellings referred to by Parade in his "Culture des bois," the object of which is to constitute ultimately a uniform stock by gradually transforming the irregular jardinage forest into a regular and uniform one. Let us hope, then, that the group method will prove a satisfactory system of treatment to those of the Indian forests which cannot be worked on the good, old-fashioned jardinage method.

DIJON,
10th April, 1889.

CH. BROILLIARD.

A TEAK-BORER IN TRAVANCORE.

THE teak tree, as you probably know, occurs in Travancore, and is found over considerable areas both in the low country and on the hills up to 3,000 feet elevation. It attains very large dimensions (5 feet in diameter), and grows to a great age at moderate elevations, 1,000 feet or so, and on free, well-drained situations ; but in the low country it seldom grows much above 15 inches in diameter, the timber here being much heavier, and the concentric rings much closer together than when the tree grows on the hills. This is probably due more to its growing on a hard laterite soil, than on the difference in elevation.

This small stunted teak is very much troubled by a species of red borer, not quite an inch long, which perforates the wood chiefly in the neighbourhood of the old branches, and of course very much lowers its value.

What I wish to know is, whether teak is bored in this way in other parts of India, and if so, what remedy is adopted to reduce the damage done? As the teak trees growing in the interior and on the hills are surrounded by grass which is annually burnt, while the trees in the low country are often found on cultivated land, it may be that the former escape and the latter suffer, because the

grass fires on the hills destroy the beetles which produce the borers, which does not happen in the latter case.

QUILON, *9th May, 1889.* } T. F. BOURDILLON.

Note.—We trust that some of our readers in the Madras and Bombay Presidencies, and in the Central Provinces and Burma, will answer Mr. Bourdillon's enquiries. In the meantime we would be obliged if that gentleman would send us, for identification, specimens of the insect, as complete as he can obtain them, and further notes regarding its depredations and general life-history.—[ED.]

THE MENSURATION OF TIMBER AND TIMBER CROPS.

(*Continued from page* 240).

6. *Survey by Diameter or Height-and-Diameter Class.*

IN a forest crop there is never any constant relation between the heights, diameters and form-factors of the component trees. Of these three elements, two of them remaining the same, the widest fluctuations are presented by the diameter, the other two varying within much narrower limits. In regular crops the average height of the stems comprised in each class varies directly as the diameter of that class, the thicker stems being also the taller and *vice versâ;* so that we may consider the height as a function of the diameter. If the crop is very regular, the differences of height between the component trees will be so small that the height of the crop may be expressed by a single figure. In irregular forests, on the other hand, there can never be any constant relation between height and diameter, for the thickest stem may be the shortest of all.

As regards form-factor, it may be regarded as a function of height and diameter combined, for its increment or decrement must obviously follow the conjoint increments or decrements of these latter, and especially of the ratio between them. Hence the form-factor may be assumed as being nearly equal for trees of like diameter and height. But even in regular crops measurements of sample stems of one and the same diameter may give differences of from 4 to 6 and even 10 per cent. in the form-factors.

We will now investigate the different conditions that may present themselves in the survey of crops or of a group of trees composing a diameter-class, which may be regarded for the present purpose as a small crop by itself.

Starting with the element of diameter, we have two broad cases: The diameters of the trees may either (A) be different, or (B) be one and the same.

A. DIAMETERS DIFFERENT.—Under this head we may have four separate cases as follows :—

(*a*). *Height and form-factor constant, i.e., form-factor a function of height.* We know that $a_a = \frac{A_s}{n}$ (page 239), and $C_s = c_t \frac{A_s}{a_t}$ (formula iv, page 231). In other words, the sample tree of average basal section is a true average tree. This case obtains only exceptionally in a whole crop, but is always approximately true for the groups of trees composing its several diameter-classes.

(*b*). *Height and form-factor a function of the diameter and hence variable, or height constant, but form-factor variable and a function of diameter.*—The former contingency may, as a rule, be assumed as always prevailing in regular crops of one and the same age and origin; the former can very seldom happen. In either contingency only diameter-classes should be adopted.

(*c*). *Height irregularly variable, the form-factor being a function of height.*—In this case height-classes must also be formed.

(*d*). *Height and form-factor both irregularly variable.*—This is generally the case in irregular crops composed of trees of various ages. Here also diameter-and-height classes must be formed, and in addition several sample trees should be measured for each class.

B. DIAMETER CONSTANT.—This is always true of diameter-classes, and may be assumed to be true also of diameter gradations. We have three distinct cases as follows:—

(*a*). *Height and form-factor constant or both of them functions of diameter.*—In such a contingency every component tree would be a correct average tree, but this is never exactly the case even in the most regular crops.

(*b*). *Height constant or a function of diameter, form-factor variable.*—This is the case generally met with. In order to obtain a correct average form-factor several sample stems must be measured.

(*c*). *Height variable and form-factor a function of height.*—In this case height-classes must be formed, thus reducing the conditions (for each height-class) to those of case (*a*).

The preceding detailed study indicates the several cases in which it is necessary to form only height-classes or only diameter-classes, or combined height-and-diameter classes. Every crop to be surveyed must be divided up in this manner into a small number of

distinct groups, for each of which the corresponding sample tree, possessing the average basal section, may be taken as a true representative in respect of both height and form-factor.

In the constitution of diameter-classes one of three systems may be adopted, *viz.*—

I.—*That of equal diameter-gradations.*—The number of gradations are usually from three to five, and the figures of the enumeration survey at once indicate the number of trees to be included in each gradation. In this system the disparity between the numbers of trees in the several classes is always very great.

II.—*That of natural size-classes.*—In most canopied crops at least three classes of individuals are easily recognisable—(1), a class of small stems with restricted crowns and below the average height of the crop; (2), a middle class with freely developed crowns and of the same height as the crop; and (3), a class of thicker stems with crowns rising above the general mass of the crop. To these classes may be added two others, *viz.*, that of suppressed individuals and that of old standards or trees of much greater age than the rest of the crop, and conspicuous by their relatively great size. These several classes are generally at once recognisable from the figures of the enumeration survey.

III.—*That of equal groups.*—If natural size-classes are not distinguishable by their relative thickness of stem, then it is advisable to form classes containing approximately the same number of stems. In this method the range of diameter included will obviously differ from class to class, and the method is therefore to this extent the very opposite of I.

The number of sample trees to measure in each diameter-class will depend (i), on the relative proportion to the entire crop which the class represents either in respect of number of stems or of cubical contents; (ii), on the uniformity of the component trees in respect of height and shape, *i.e.*, the ease or difficulty of selecting correct representatives of the class in question, and (iii), on the possibility of errors due to an insufficient number selected in one or more classes being compensated by excess or deficiency of results obtained for the other classes. Obviously the possibility of such compensation exists only if each sample stem represents approximately an equal fraction of the total contents of the crop.

As a rule, the number of sample trees measured in any diameter-

class is calculated on the proportion either (*a*) of the number of stems, or (*b*) of the aggregate basal sectional areas comprised in that class. The adoption of the latter of these two bases of calculation is always more likely to give correct results.

The grouping of the trees into height-classes must take place *pari passu* with the enumeration survey, and be a part of that operation; their separation into diameter-classes may be effected after the survey with the help of the figures which it furnishes.

To illustrate what has been said in this Section we append below a specimen of a survey by diameter-classes.

Forest **Kanjatra** Sample Plot **(a) 264′ × 165′** Age **135** years.
Compartment **97** Area **1** acre. Density of stock **0·9.**

Diameter in inches at breast-height.	Species, Spruce.					Number of stems.	Basal area, in square feet.	Sample Stems. Diameter.	Basal area.	Quantity of wood.	Height.	Form-factor.	Age.	Remarks.
								In.	Sq. ft.	C. ft.	Ft.		Yrs.	
10	⫽ /					6	3·272							
11	⫽ ///					8	5·280							
12	⫽ ⫽	/			I.	11	8·639	13	·9218	38·14	92	·45	135	
13	⫽ ⫽	////				14	12·905	branches 1·33 = $3\frac{1}{2}$ °/₀						
14	⫽ ⫽	⫽ //				17	18·173							
15	⫽ ⫽	⫽ /			/	16	19·635							
16	⫽ ⫽	⫽ ////				19	26·529	17	1·5763	75·26	111	·43	133	
17	⫽ ⫽	⫽ ⫽	////			24	37·830	18	1·7671	83·40	111	·42	136	
18	⫽ ⫽	⫽ /			II.	16	28·274		3·3434	158·66				
19	⫽ ⫽	⫽ /				16	31·503	branches 6·35 = 4 °/₀						
20	⫽ ⫽	////				14	30·543							

Diameter in inches at breast-height.	Species, Spruce.					Number of stems.	Basal area, in square feet.	SAMPLE STEMS. Diameter.	Basal area.	Quantity of wood.	Height.	Form-factor.	Age.	Remarks.
21	⧄⧄ ⧄⧄	⧄⧄ //				17	40·890							
22	⧄⧄ ⧄⧄					10	26·398	23	2·8852	133·00	115	·40	134	
23	⧄⧄ ⧄⧄	/				11	31·738	24	3·1416	143·00	116	·39	135	
24	⧄⧄ //				III.	7	21·991		6·0268	276·00				
25	⧄⧄ //					7	23·862	branches		11·87 = 4·3 °/o				
26	///					3	11·061							
27	///					3	11·928							

Diameter-Class I. ..	56	48·269
" " II. ..	105	174·314
" " III. ..	58	167·868
Total, ..	219	390·451

Calculation of Quantity of Wood.

$C_1 = 38·14 \times \frac{48·269}{·9218} = 1{,}997$ c. ft.

$C_2 = 158·66 \times \frac{174·314}{3·3434} = 8{,}272$ "

$C_3 = 276 \times \frac{167·868}{6·0268} = 7{,}687$ "

17,956 " = wood of stems.

Add 4 °/o 718 " = " " branches.

Total Wood .. 18,674 "

Calculation of average stems.

$A_1 = \frac{48·269}{56} = 0·8619$ sq. ft. and $d_1 = 12\frac{9}{16}$.

$A_2 = \frac{174·314}{105} = 1·6601$ " " $d_2 = 17\frac{7}{16}$.

$A_3 = \frac{167·868}{58} = 2·8943$ " " $d_3 = 23$.

7. *Survey by Diameter-gradations. Methods of Draudt, Urich and Hartig.*

Whenever it is impossible to determine accurately the average tree even for separate diameter-classes, it is necessary to adopt as the basis of survey diameter-gradations (*see* page 232, I A a γ), which obviously require the measurement of a larger number of sample stems than the method just described, the number for each gradation being proportional to the total number of stems comprised in that gradation.

Several methods of survey by diameter-gradations have been devised, but we will describe here only those of Draudt, Urich and Robert Hartig :—

Draudt's Method.

In this method a certain proportion, say the z-th part, of all the trees in each gradation, and, therefore, also in the whole crop are measured as sample trees, the number of such sample trees being therefore

$$= \frac{n}{z} = \text{say } \zeta.$$

Now as these sample trees represent the z-th portion of the whole crop, not only in number but also in respect of contents and basal area, we have

$$A_s = a_t z \text{ and } C_s = c_t z = c_t \frac{n}{\zeta} = c_t \frac{A_s}{a_t}.$$

As the z-th part of the number of trees composing a diameter-gradation may not be a whole number, and we cannot measure a fraction of a tree, it is best, in calculating the cubical contents of all the trees in a gradation, to use the last of these equalities, which enables us to measure up whole stems only, and also renders it unnecessary for the sample stems to be exact average stems for the gradation in question.

In practice the procedure is as follows :—

An enumeration survey is effected in classes having a sufficiently wide range of diameter (say 2 inches). This being done, the figure z is determined, and the number of sample stems to be measured for each gradation is then the nearest integer in the expression $\frac{n}{z}$. But if $\frac{n}{z}$ is a very small fraction, as many gradations are lumped up together as will give one sample tree ; and when this is done, the basal area of the sample tree is determined in the same way as when several diameter-classes of the enumeration survey are lumped up together to form a new diameter-gradation (*see* the

figures at the bottom of the example at end of the preceding Section). The diameters and basal areas of all the sample stems are then carefully registered, and their cubical contents accurately measured and expressed, either in one lump figure or in separate figures giving the respective quantities of timber, fire-wood, &c. Lastly, the contents of all the trees in each gradation are calculated by the formula $C_s = c_t \frac{A_s}{a_t}$. If the trees falling under one and the same diameter-gradation are of very different heights, this fact must be borne in mind in selecting the sample trees, or the diameter-gradation may be divided into sub-classes according to height, and each sub-class treated in the way described.

The great advantage which Draudt's method offers is, that all the sample stems for the whole crop may be measured up together and their contents determined, not only in one lump figure, but also according to the different classes of produce they yield, thereby enabling us to estimate by means of a few easy multiplications the contents of the entire crop.

Urich's Method.

We have seen that in Draudt's method fractions in the quotient of $\left(\frac{n}{z}\right)$ are got rid of by taking the nearest whole number, but where the quotient is much less than unity, several quotients are added together, and the result worked out for a group of diameter-gradations. This procedure is obviously not quite logical, and hence Urich has modified it so as to secure greater consistency. He adopts the latter principle throughout, and his system is accordingly always to carry over all fractions to the next class. The sample trees are hence seldom required to represent a separate diameter-gradation, but nearly always a group composed of the whole or portions of two or more such gradations. The diameter of the sample trees for each group is accordingly determined by the proportion of the respective numbers of the several gradations composing the group. When the formula $C_s = c_t \frac{A_s}{a_t}$ is employed, it is not so necessary that the sample trees should be representative of the group in respect of volume as in respect of height and form-factor.

The advantages of Urich's method are the same as those of Draudt's.

In its valuation surveys the Commission for Forest Research in Germany adopts five diameter groups, and fells from two to three

sample stems for each group. This is a combination of Urich's principle with the method of diameter-classes.

Hartig's Method.

In this method the groups are so formed that the component trees aggregate equal basal areas.

The procedure is as follows:—

First decide what number of sample trees (ζ) or of groups of trees (G) we require, and then determine the aggregate basal area to be included in each group (this area $= \frac{A_s}{\zeta}$ or $\frac{A_s}{G}$). Now form the groups, beginning with the smallest class of trees. Next the diameters of the several sample trees are either fixed approximately by inspection, or rigorously determined by means of the formula $a_t = \frac{A_s}{n}$. Each sample stem is then measured by itself, and the contents of the corresponding group ascertained with the help of the formula $C_s = c_t \frac{A_s}{a_t}$. Or the contents of each sample tree may be considered as the contents of an imaginary cylinder of the same base as the tree, and the corresponding height of the cylinder obtained from the formula $h = \frac{c}{af}$, the total contents of the crop being the product of the total basal area of the crop multiplied by the mean of all the cylindrical heights thus obtained.

In this method the larger stems obviously compose, number for number, more groups than the smaller ones, and the sample trees, although of course samples of the corresponding group, are not samples of the crop considered as a whole. The contents or yield in different classes of produce of the sample trees cannot hence be worked up together in one place, and the main advantage afforded by Draudt's method is thereby lost. Comparing the two methods, Hartig's may be employed when as accurate as possible an estimate of the contents of the crop is required with the help of only a few sample trees, whereas Draudt's should be adopted when it is possible to fell a larger number of sample trees and an estimate of the yield in different classes of produce is required.

Example of the Three Methods.

To render the preceding explanations clear, we proceed to show below, by means of a comparative parallel statement, how to use the three methods of valuation just described. We take the case of a 47-acre sample plot of beech.

Result of Enumeration Survey.			Distribution of the Sample Stems.									
			Draudt's Method.		Urich's Method.				Hartig's Method.				
			$\zeta = 10$; $s = 75$.		$\zeta = 10$; $s = 75$.				$A = 863{\cdot}763$; $\zeta = 10$; $\frac{A}{10} = 86{\cdot}376$.				
Diameter in inches at breast-height.	Number of trees.	Basal area in square feet.	Number of the sample stems.	Diameter of the sample stems.	Diameter.	Number of trees.	Running number of the sample stems.	Average diameter of the sample stems.	Diameter.	Number of trees.	Basal area.	Running number of the sample stems.	Average diameter of the sample stems.
					8	50			8	50	17·453		
					10	25			10	114	62·178		
						75	1	9	12	9	7·069		
8	50	17·453	1	8						173	86·700	1	10
					10	75	2	10	12	110	86·394	2	12
					10	14							
10	114	62·178	1	10	12	61			12	39	30·631		
									14	52	55·589		
						75	3	12					
									14	91	86·220	3	14
12	158	124·093	2	12	12	75	4	12	14	81	86·590	4	14
					12	22							
14	156	166·766	2	14	14	53			14	23	24·587		
						75	5	13	16	44	61·436		
16	128	178·721	2	16	14	75	6	14		67	86·023	5	14
					14	28			16	62	86·568	6	16
18	66	116·632	1	18	16	47							
									16	22	30·718		
						75	7	15	18	31	54·782		
20	42	91·630			16	75	8	16		53	85·500	7	17
					16	6			18	35	61·850		
					18	66			20	11	23·998		
22	19	50·156			20	3	9	18					
										46	85·848	8	18
						75							
			1	22					20	31	67·632		
24	12	37·699			20	39			22	7	18·479		
					22	19							
					24	12				38	86·111	9	20
					26	5							
26	5	18·435							22	12	31·678		
						75	10	22	24	12	37·699		
									26	5	18·435		
	750	863·763	10							29	87·812	10	24

In the preceding example, in applying Draudt's method, the trees respectively of the four highest diameter-classes being separately very much less than Z (75), are lumped up together for the purpose of the valuation.

To complete the illustration of Urich's method, let us suppose that we have selected and felled 10 sample trees of the respective average diameters, and that they furnish the following figures :—

Total basal area of the 10 trees, ... 11·62 sq. ft.
Yield in timber " ... 98·53 solid c. ft.
" " fire-wood " ... 856·40 stacked c. ft.
" " faggot-wood " ... 84·70 " "

Then $\frac{A}{a} = \frac{863·73}{11·62} = 74·3$, and the contents of the whole crop are—

Timber = 98·53 × 74·3 = 7,321 solid c. ft.
Fire-wood = 856·40 × 74·3 = 63,630 stacked c. ft.
Faggot-wood = 84·7 × 74·3 = 6,293 " "

The completion of the valuation by Hartig's method is effected in the following tabular statement :—

Running number.	The Sample Stems. Diameter.	Basal area.	Contents. Large wood.	Contents. Faggot wood.	Total.	Height of cylinder $hf = \frac{c}{a}$	Contents of each Group. $C = c\frac{A}{a}$ Large wood.	Faggot wood.	Total.	$\frac{A}{a}$
	in.	sq. ft.	Cubic feet solid.			ft.	Cubic feet solid.			
1	10	·5454	25·80	5·16	30·96	56·3	4,101	820	4,921	86·700 ÷ ·5454 = 158·96
2	12	·7854	41·20	8·24	49·44	62·9	4,532	906	5,438	86·394 ÷ ·7854 = 110·00
3	14	1·0690	60·00	12·00	72·00	67·3	4,839	968	5,807	86·220 ÷ 1·0690 = 80·65
4	14	1·0690	60·00	12·00	72·00	67·3	4,860	972	5,832	86·590 ÷ 1·0690 = 81·00
5	15½	1·3104	79·80	12·50	92·30	70·4	5,238	820	6,058	86·023 ÷ 1·3104 = 65·64
6	16	1·3963	82·10	12·60	94·70	68·7	5,090	781	5,871	86·568 ÷ 1·3963 = 62·00
7	17	1·5763	94·20	13·13	107·33	68·1	5,109	712	5,821	85·500 ÷ 1·5763 = 54·24
8	18	1·7671	107·00	14·00	121·00	68·5	5,198	680	5,878	85·848 ÷ 1·7671 = 48·58
9	20	2·1817	133·00	15·00	148·00	67·8	5,260	592	5,852	86·111 ÷ 2·1817 = 39·47
10	23½	3·0121	217·50	21·70	239·20	79·4	6,340	632	6,972	87·812 ÷ 3·0121 = 29·15
			Totals, ...			676·7	50,567	7,883	58,450	

Or we may use the formula $C_s = A_s HF$; whence

Total contents = 863·763 × $\frac{67·67}{10}$ = 58,451 cubic feet.

FORESTRY IN HUNGARY.

(*Concluded from page* 229).

Forests of the Berzava.

On the morning of the 18th July, we started with M. Fery at an early hour, and drove a distance of 18 miles, to visit the forests in which the wood used at Resicza is grown. Our route lay through the Domain, and led us past several villages surrounded by fields and orchards. The Company gives advances for building, and allows the people, on the payment of a nominal land rent, to plant orchards of plum and apple trees, from the fruit of which they distil a spirit. The control of all such concessions is vested in the Forest Officers. We passed through some forests of beech, mixed, at the lower levels, with hornbeam, birch, and other trees, and higher up, with spruce, silver fir, and a small proportion of larch. We noticed a considerable number of plantations, the plants standing in vertical lines. We halted at the village of Fránzdorf (1,770 feet); and then turning southward, followed the main valley of the Berzáva, until we reached the reservoir (altitude 2,180 feet) above which a portion of the beech forest is being clean-felled.

The cuttings are commenced at the end of September, continued throughout the winter, and completed in May or June, when the logs are converted into billets 40 inches long. Between July and September, a system of temporary dry slides is constructed of beech poles, about 6 inches in diameter; and by this means the billets are conveyed—during the period from October to March—a part of the way down the valley. The temporary slides cost about 7*d.* to 8*d.* per running yard. In winter, when the frost is on the ground, a fall of 7 in 100 is sufficient for them; but, for work during the dry season, a slope of from 10 to 15 in 100 is required; and if the billets do not run freely, the slides must be wetted, so as to reduce the amount of friction. Over the last two miles above the reservoir, a system of wet slides has been constructed in connection with the dry ones; and down them the wood is sent—between April and July—to a point immediately below the dam. The main channel of the wet slide is formed of planks from 2½ to 4 inches thick; it is 24 inches wide at bottom, 40 inches wide at top, and has a fall of 1 in 100. If such works are required to last for a single year only, the timber used is fir; if for five or six years, it is beech; oak will last for ten years. The main portion of the existing slide cost 3*s.* per running yard, the feeders, which are of smaller section, costing 2*s.* 6*d.* The slide, when in use, is full to the brim with water and billets; and men

are stationed at sharp bends, or other points where obstructions are likely to occur, in order to prevent a stoppage, by pushing the wood along. Where an exceptionally steep fall is met with, there is an ingenious arrangement for passing the water into a sub-channel, by means of a grating in the floor of the slide, and thus reducing the speed of the descending wood; the water re-appears lower down, where the fall is less. The slide passes beyond the end of the dam, below which it is furnished with a number of outlets, each leading into a shoot, so arranged as to throw the billets into the bed of the stream. Each outlet has a door, which, when it is opened and thrown back across the slide, bars the further passage of the wood, and permits it to escape down one of the shoots. When the first door has been open for some time, so that a large heap of billets has been deposited, it is closed, and the next one is opened, and so on, until the stream bed is sufficiently filled with billets,—that is to say, when some 350,000 to 500,000 cubic feet have accumulated.

The dam, which has been built at a distance of about 5¼ miles from the head of the Berzáva, where the forest is situated, is made of wood and stones, faced with clay; it is 37 feet high, and the reservoir, when full, contains 4⅓ million cubic feet of water. When the sluice gates are opened, the reservoir empties itself in five hours; and the billets are carried down the Berzáva, which has a fall of 1 in 100 for the first mile, and of from 3 to 5 in 100 or the rest of the way. The first weir, which is near Resicza, at a distance of 23 miles from the dam, is reached in about six hours. The wood caught at this weir is led by a canal 600 yards long running beside the river to the first charcoal yard, where 26 kilns are at work. A part of the wood which passes it is caught by a second weir, 500 yards further down, whence it is taken by a canal to a second charcoal yard provided with 34 kilns. The remainder of the wood is arrested near a third yard containing 40 kilns, by two strong weirs, beyond which none of it can pass. A narrow-gauge railway traverses the yards, and by it the charcoal is conveyed to the furnaces. The three yards together hold 4¼ million cubic feet of wood, and are capable of turning out a million and a quarter bushels of charcoal in a year. The time occupied, from the commencement of the fellings to the delivery of the last batch of wood at Resicza, is about one year and ten months; and the total cost of production, including felling and converting, is ⅗ of a penny per cubic foot (stacked). It is said that if the wood had to be conveyed by carts to Resicza, the cost would be at least doubled.

In the month of October, two years after the commencement of

the fellings, charcoal-making is begun in the forest. All the wood unsuitable for floating is then put into kilns, which are circular in form, and of various dimensions according to their situation, the largest containing 5,000 cubic feet (stacked) of wood. The split billets are laid at the bottom, and round pieces cut from branches are placed above them.

It is said that 100 cubic feet of stacked wood, equivalent to 72 cubic feet of solid wood, yield 38½ bushels of charcoal at Resicza, and 35½ bushels in the forest, where the arrangements for making it are not so perfect. The wood is almost exclusively beech, the kinds next in order of importance being oak, lime, and silver fir. The forest now being cut is aged from 120 to 140 years, and it yields 2,450 cubic feet (solid) of wood per acre. There is a good deal of advance growth on the ground, especially at the lower levels; but, where this is wanting in sufficient quantity, the crop is completed by planting.

Before leaving the reservoir, we were shown the arrangements for breeding trout, which are conducted by the Forest Officer; and we then drove back to Resicza, stopping for a short time at Fránzdorf, to see a dance given after a Roumanian peasants' wedding. The women's dress consists of a white embroidered garment, reaching to the ankles; a long and narrow woollen band, wound round the waist, and used for carrying loads; and a pair of bright-coloured and richly ornamented woollen aprons, one worn in front and the other behind, the latter ending in a long red fringe, which falls to the bottom of the white skirt. A red flowered handkerchief, bound over the hair, completes a very picturesque and semi-oriental costume. Most of the girls wore bright-coloured natural flowers in their hair, and the bride was distinguished by a white wreath. The men are clad in white, with a coloured jacket; they wear sandals, and wind strips of cloth loosely round the lower part of the leg. The dance appeared to us a rather monotonous one; but those engaged in it, among whom we noticed a large proportion of remarkably handsome women, seemed to be enjoying themselves thoroughly.

On the morning of the next day, accompanied by M. Fery and M. de Bene, we paid a second visit to the Bessemer works at Resicza, where we saw the making of railway-carriage wheels, and other things; and in the afternoon we mounted to the high ground above the town, and inspected the wire-rope tramway, 270 yards long, used for carrying ore down to the furnaces. There are two trucks, one at each end of the rope; the full truck in descending draws up the empty one, so that no engine is required. We were told

that a wire-rope tramway, 17 miles long, and worked by steam-power, is in use in Transylvania.

Anina and the Danube.

On the 20th of July we left Resicza, and drove 37 miles across the hills to Anina, stopping on the way to look at the Bulgarian village of Krassova, through which our road lay. The country is very much denuded of trees, apparently owing to excessive grazing, but some planting work is going on in places. At Anina we were received by M. Schmidt, the Company's chief engineer, who treated us with great courtesy and kindness. He took us over the iron-works, where we saw the manufacture of cast-iron columns, rolled iron bars, wire, and nails. Some very pretty ornamental ware of the same metal was also being made, and a specimen of it was presented to us.

The locality is rich in both coal and iron, and also in a bituminous schist, yielding, on distillation, an oil from which petroleum and paraffin, to the amount of 1,800 tons per annum, are manufactured at Oravicza.

We quitted Anina next day by train, passing through a beautiful beech forest, succeeded by an open country, which has evidently suffered very much from over-grazing, the red soil on the hill-sides being completely exposed in the neighbourhood of the villages. The scenery up to Oravicza is very beautiful; but beyond this we crossed a cultivated plain, producing, in addition to grain crops, which were being harvested by the peasants in their white dresses, a great quantity of maize, and some potatoes and vines. We then travelled by way of Jám and Jassenova to Baziás, where we passed the night.

On the morning of the 22nd we went on board one of the Danube boats, and steamed down to Orsova. On our left were the spurs of the Eastern Carpathians, and on our right the Servian hills. The wide river is here very rapid and muddy, and there is a great deal of traffic on it, many steamers and boats of all kinds, including "dugouts," being seen. There were also some floating mills. The low Servian hills are, as a rule, well wooded; but on the Hungarian side, where the general aspect is southerly, the forests are confined to the higher levels, the lower slopes being occupied by villages and fields. After passing down several rapids, we entered the beautiful defile of Kasan, where we saw, on the right bank, the remains of Trajan's road, cut out of the base of the cliffs. His inscription on the rock is still legible. This is the finest part of

the lower Danube, the scenery being equal to, or even surpassing the best parts of the Rhine between Coblenz and Bingen.

On leaving Orsova, we drove a distance of 16 miles up the valley of the Czerna, in which there are some magnificent poplars, to the Baths of Hercules, where, after dining at the Kursaal, we passed the night; and, rising the following morning at 3 A.M., we drove to the railway station, and took the train for Buda-Pesth. At first the country was very hilly and well clothed with woods, but as we advanced further the valley opened out, and was cultivated. We struck our old route at Temesvar; and, crossing the Hungarian plain with its vast fields of maize, its yokes of oxen in the plough, and bands of horses treading out the corn, reached our destination the same evening.

That we were able to see so much of the Bánát in such a short time, was due, in the first instance, to our kind friend, M. Ronna, principal Director of the Company, whom we had met at Nancy, and who gave us the needful introductions. We were also much indebted to M. Willigens, Inspector-General, in administrative charge of the Domain, and to M. Drexler, Secretary to the Council of Administration, as well as to the local officers previously mentioned in our narrative; and our most sincere thanks are due to all these gentlemen for their kindness, and for the valuable assistance they afforded us.

We returned to Nancy by way of Vienna, Frankfort, Mayence, and Metz, after having made a most interesting tour.

II. Shikar and Travel.

THE MAN-EATING TIGRESS OF MUNDA'LI.

Our readers will forgive us for being so late in the day with our account of this brute, which had been for more than 12 years the scourge of the hills immediately north of Chakrata. The present paper was, however, already in print before our June Number issued from the press, and it was only want of space that prevented its publication in that Number.

According to the information we have been able to collect, our tigress seems to have been first heard of in 1876. Throughout her career as a man-eater, she confined herself to a narrow beat hardly 24 miles from end to end, ranging from the Ráma Sarái group of villages in the Jumna valley to the spur immediately overlooking Chakrata.

After leaving the Jumna valley she came up to Lokhár at the top of the spur just above Ráma Sarái. From Lokhár she followed up, to the other end of her beat, the main ridge which forms the water-parting between the Jumna and Tons rivers. She never left this ridge or its vicinity to go down to the numerous villages which skirt the valleys of the several mountain streams that run down into the Tons. This ridge, being from 8,000 to 10,000 feet above the sea, is covered with snow from December to the end of March, so that during the winter she remained at the lower elevations round Ráma Sarái. But so soon as the snows were melted, she would come up again, although during April—May and October—November the temperature on the ridge after sundown stands constantly in the vicinity of freezing, and is often low enough for the ground to remain frozen hard for hours after the sun is up.

There can be no doubt that she took to man-eating under stress of long starvation, due to the difficulty of securing game in the steep mountainous country in which she had established herself. Previous to her appearance tigers were unknown so far north in Jaunsár.

About that time, however, professional graziers (Gujars), gradually forced to move eastwards from Kashmere owing to scarcity of grazing for their increasing herds, reached the Dehra Dún. The

custom of these men is to remain in the hills until driven down to the Sub-Himalayan forests by the severe winter there. Our tigress thus no doubt followed the herds from the Dún forests, and got left behind when these went down again at the beginning of winter.

She appears from the very first to have had cubs with her, which fact probably accounts for her great destructiveness and boldness soon after her arrival in the hills. In September 1880 she took up her quarters, with three nearly full-grown cubs, in the neighbourhood of Deoban, 3½ miles above Chakrata, and killed three men within a fortnight. One of these cubs was shot on September 15th by Mr. Smythies almost at the upper end of Chakrata; another was killed by Mr. Lowrie eight days later; while the third, put up with the mother in a beat only five days after, got away wounded. Through all the vigorous hunt after her and her cubs during a whole fortnight, the tigress escaped scatheless.

It has been already said above that she took to man-eating owing to the precipitous nature of her haunts, which prevented her from obtaining a sufficient supply of the usual food of tigers, *viz.*, deer, pigs, &c., and, when opportunity offers, cattle. The same circumstance drove her to attacking flocks of sheep and goats, which are very numerous in those rich high-level pastures during the period from the melting of the snows to the approach of winter. She would make one or more rushes through a flock, killing several animals, only a few of which she could eat. Thus her appetites were not purely anthropophagous, although she no doubt preferred the flavour of the better nourished flesh of man. She often apparently disappeared for weeks and months at a time when she chanced to get in amongst a sufficiency of game. When this supply ran short, she would suddenly appear and attack men with increased persistence, killing several within a few days. As she grew older, her taste for human flesh increased, and her fear of man proportionately diminished.

If near a herd of cattle she took no notice of the cattle, but went straight for the herdsmen. On one occasion, in June 1883, she walked at night into an out-office of the Lokhár rest-house, where some men were sleeping at the further end, a cow and her calf being tied up in the doorway. She passed these animals without taking any notice of them, and carried off one of the men.

Mention of this last-mentioned event leads us to a necessary digression in order to recall to the reader's mind the highly imaginative account of the same, which appeared in June last in the

Civil and Military Gazette (Lahore), and was subsequently reprinted by almost every newspaper in India, and even those in England. The wag who wrote that article put into his picture a bright moon, the invariable cubs, and the usual play with her victim which the fond mother goes in for in order to teach her offspring how to kill. The picture was still further embellished by several human figures perched up in surrounding trees, watching this spectacle of horror. What actually took place was simply this :—The movements of the affrighted cow and calf, and no doubt also the noise made by the tigress as she darted off with her victim, woke the other men, who began to interrogate one another as to the cause of the commotion. Some of them even went to the door to investigate. Every thing was, however, still now, and the men rolled themselves up again in their bedding, not recognising in the dark that one of their number was missing. What happened in the meantime outside was that the tigress, alarmed by the sudden exclamations of the awakened sleepers, dropped her man and made off to one side. When all was quiet again, she came back and picked up the unfortunate man, who just then became conscious and groaned aloud with pain. Realizing at last the position of affairs, the men inside the room rushed out with loud cries only to see, in the dim light from the clouded sky, the tigress disappear with their comrade down the slope on to the road below. Mr. G. P. Chill, from whom we had the preceding details a few days after their occurrence, and who was sleeping in the rest-house, came out with his rifle on hearing the cries of the men, but the tigress had already disappeared, and he merely fired off his weapon in the direction in which she had gone, in order to calm the fears of the men. We ourselves were on that eventful night in camp at Mundáli, only 5 miles from Lokhár, and the account we have given above accords in every particular not only with the information given by Mr. Chill, but also with that given to us directly by eye-witnesses, and by Dhan Singh, the headman of Lokhár, whom we met last only a few days after the death of the tigress.

There was a strange fatality which always brought the tigress to Mundáli while we were there. In 1883 we spent two months at Mundáli, during the whole of which time she kept within the immediate neighbourhood. For several nights running she patrolled the road running along the main ridge above Mundáli, and also the bridle-path connecting Mundáli with that road. She often prowled round our camp at night, on two occasions coming right inside it. The first time she came it was past midnight, and every one was asleep. Our orderly was, however, fortunately sleeping

lightly, and was suddenly awakened by the dull thuds of some heavy animal, like a buffalo (to use his own words), galloping down the soft slope just above his *shuldari*. A presentiment of the tigress' approach made him snatch up a brand from a large fire that was burning immediately outside the opening of the tent, and at the same time to shout away at the top of his voice. He had hardly begun doing this, when the flaps of the tent were suddenly flung open, and he found the brute glaring at him with only the log fire between them. His shouting awoke the half-dozen fellow-occupants of his tent, and between them they made such an infernal hullaballoo, while he kept flourishing the fire-brand across the opening of the tent in the face of the tigress, that the beast could do nothing more than continue standing there and glare at the men. This went on for about two minutes, by which time the whole camp was astir, and a number of men, armed with bludgeons, fire-brands, and anything else they could pick up, rushed on the scene. Such an accession of force was of course rather more than the tigress had bargained for; she sprang back a few paces, tore up in her rage great clods of earth, and sulkily walked away, by the same route by which she came, into some cover not far off. The orderly's tent, which had been pitched about 30 yards in advance of the rest of the camp, was of course forthwith abandoned, and its occupants were only too glad to pass the rest of the night within the body of the camp.

The next visit the tigress paid us was about 10 P.M. before any one had turned in for the night. The moon, just passed her full, was concealed by clouds, but enough of her light passed through to enable objects up to 20 yards off to be discerned clearly. A party of the servants were sitting gossiping round a fire on the edge of a terrace. Suddenly one of the party, who was facing the edge of the terrace, caught sight of a crouching animal about 8 yards off. Instantly a hue and cry was raised, and the tigress sprang away and disappeared down the slope.

A few days before our arrival at Mundáli the tigress had entered a cabin built of large hewn slabs, in which about 18 men were asleep, and walked off with one of the sleepers without awaking the rest. This incident and the attack on our orderly's tent combined to render us circumspect, and before retiring for the night we invariably bolted the doors and windows of the rest-house occupied by us. We are reminded of this circumstance by the remembrance of some raillery, of which we were the butt at a dinner party, and the purpose of which was to bring our courage into question. The scoffer, who will recognise himself when he

reads this, laughed at the mere idea of the most daring man-eating tiger going *near* a house or tent, much less *entering* it. The evidence of the orderly and his companions who had seen the tigress by the light of their fire, the evidence of our own eyes, which had seen her well-marked foot-prints before the orderly's tent and in the soft soil of the slope beyond, went for nothing. In our terror a leopard had assumed the proportions of a tiger! Against the direct evidence of the eyes of several individuals, who were by no means griffs in the matter of tigers and leopards, the mere opinion of one individual, who said that only a leopard could display the boldness this supposed tiger had been reported to have shown, was accepted as sufficient disproof. The supposed leopard has now been shot, after repeating all its previous performances, which it was so absolutely certain no tiger could have been guilty of; but, unfortunately for our scoffer, this leopard has had the bad grace to turn out to be a tiger, not the mythical tiger seen by the dim light of the camp fire through the spectacles of terror, but a real unmitigated tiger.

For those who are still incapable of believing that a tiger can enter a tent or house, we will cite another instance which occurred last March. Sawing operations were going on just above the Tons, about 24 miles further in the interior of the Himalayas than Mundáli, and the sawyers were located in several huts huddled together by the side of the Tons-Ráma Sarái bridle-path. One night a tigress, who had previously killed and eaten two people, and was accompanied by two young cubs, went up to one of the huts in the middle of the group, pushed open the door, entered the hut, stepped over the first sleeper, and seized the next one by the throat, causing instantaneous death.

But to return to the Mundáli tigress. We have said before that by a strange fatality her visits and ours to Mundáli always coincided. On the 7th of May, 1889, we reached Mundáli in company with the Forest School students, who were on their hill tour. On our way we had been informed that she had just been killing two women in Ráma Sarái, and so we congratulated ourselves that she was well out of our way. Nevertheless we warned the students and their servants to be careful. One party of four European students pitched their tents on a spur about 80 yards above the place where our orderly's tent had been attacked six years ago. Towards 10 o'clock that night, the moon being up one of the students happened to come out of his tent, when only eight paces off he observed a large animal standing at the same distance from their kitchen tent. He at once called to the others

The tigress, for she it was, finding herself observed before she was ready to do any damage, fled down the hill and disappeared. The students could hear the thuds of her footsteps as she sprang down the slope.

The next night the same students, expecting another visit, sat up for the brute; but instead of turning up again at our camp, she killed some sheep belonging to shepherds, whom only four days previously she had followed up from Ráma Sarái to a high-level grazing ground about 1½ miles above Mundáli. One of these shepherds she had attempted to carry off two days previously, but missing her spring, she only clawed his back and was driven off by the father of the young man striking her on the head with a stick, while a plucky large Bhutia dog seized her by the neck. This sudden double attack was too much for her, and she made off as fast as she came. Two of our students sat up the following night over the dead sheep, but although she prowled about the place and gave chase to several buffaloes, she did not come to the kills.

The night of the 11th was dark and rainy, and we were sure the tigress would take advantage of this circumstance. And so she did. There was a herd of buffaloes just above our camp. Here towards morning, as one of the herdsmen came out alone from the hut in which about ten of them were living together, the tigress suddenly rushed at him. Luckily he dodged her and ran back into the hut. Foiled of her prey, she gave chase to a small, but full-grown buffalo, which, taking fright, had separated from the herd and was running down the hill. She soon overtook the buffalo, and killed her just below the road immediately above the head of a deep and steep ravine. As soon as it was light, the herdsmen promptly moved off to another grazing ground about 2 miles nearer Chakrata. The tigress evidently followed them, for she was met just above that locality by our dâk man and syce, who saved themselves by shouting and howling at her like mad.

On the news of the buffalo being killed reaching our camp, Mr. Osmaston, one of our latest recruits from Cooper's Hill, and Mr. W. Hearsey, one of our students, got a *machan* tied up near the kill, intending to sit up for the tigress towards evening. To prevent birds from interfering with the kill, Mr. Hearsey set a servant to watch it. About 2 P.M. this man came running back to say that he heard some heavy animal, most probably the tigress, coming up the ravine, above the head of which, as said before, the buffalo had been killed. Upon this Mr. Hansard, another student, came to ask us for the loan of our 12-bore Reilly and to see whether Mr. Osmaston would accompany him. Fortunately, as the

sequel proved, we had previously forced Mr. Osmaston to take the rifle, as his own had been left behind at Chakrata for repairs. Both young men started off for the scene of the kill, intending to sit up on the *machan* for the tigress. But after having arrived there, Mr Hansard, who from the very beginning, not being able to realize what a terrible animal a tiger is, had thought of going after the brute on foot, proposed that they should go and look for her, arguing that if they sat on the *machan* they would never get her. Mr. Osmaston, who had arrived in this country only in January last, gaily closed in with this proposal. He, as said above, had our 12-bore Reilly, containing cartridges loaded with explosive conical bullets, nine of which go to the pound, Mr. Hansard, on the other hand, had only a smooth-bore, loaded with slugs. Armed thus, the two young *shikaris* moved down the hillside, each taking one side of the ravine. The sides of the ravine were so steep and rough (gradient in places exceeding 45°), that walking was extremely difficult, and Mr. Osmaston came down several times in spite of good screws in his boots. It was a good thing that the ground prevented them from moving at anything faster than a snail's pace, for as events showed, there was ample cover in the shape of rocks and bushes for a tiger to lie concealed within a few feet of the *shikari* without being noticed by an inexperienced eye When they had gone down about 180 yards, Mr. Osmaston's side of the ravine became too precipitous for him to walk along it, and he accordingly descended to the bottom with considerable difficulty over rocks, bushes and fallen trees. Meanwhile Mr. Hansard was walking parallel to him about 30 yards off on the steep slope immediately above. "Suddenly" to use Mr. Osmaston's own words, "I heard a thud followed by a series of short, snappish, angry growls, and at the same moment I heard the groans and cries for help of Hansard crushed to the ground by the tigress and struggling, face downwards, to get free. The tigress appeared to be tearing his neck and face with her claws. As quickly as I could, I levelled the double 12-bore at the brute, and, although I was very much afraid of hitting Hansard, I knew it was the poor fellow's last chance. So I pulled the trigger, and to my relief saw the brute relax her hold and come rolling down the precipitous slope, which ended in a 15-foot drop, nearly sheer. The tigress never ceased her hideous growling, even to the moment when she fell into the ravine and lay there in the water within a couple of yards of me. I was hemmed in on both sides, so I knew that if she was still capable of doing damage, it was all up with me. In sheer desperation, as my last chance, I fired the second barrel into her, and springing down the

precipitous ravine—a feat which I don't think I could possibly perform a second time—I rushed up the side of the ravine and made for the place where I had seen Hansard lying, his face all gory and apparently dying. I could not, however, find him, and I rushed back to camp, the direction of which I more or less knew, across several spurs and ravines."

What happened to Mr. Hansard was this :—As he walked down the slope, the tigress must have perceived him and allowed him to pass on, probably then stalking him. At any rate she sprang upon him from behind, bearing him down at once. Fortunately all but one of her canines had been reduced to mere stumps, and it was probably because she knew this, and also because the slope was so steep, that she attempted to do little more than claw him. Even with her worn-down teeth, if she had seized his head between her jaws, she must have crunched his skull into fragments. Actually she clawed his face and back, dislocating the jaw, but the only dangerous wound she inflicted was with her solitary effective canine, making a hole just behind the ear and penetrating to the back of the mouth. It was a fortunate thing that before the brute could inflict further damage, Mr. Osmaston's first shot did for her. The bullet entered in the region of the loins a few inches below the spine. But as the shot was fired from below, the bullet went up against the spine, which it practically broke, and then worked along under it raking it, and blowing up everything in its way until it reached the lungs, where it stopped. This first shot thus completely disabled the animal and rendered her perfectly harmless. The second bullet hit her in the shoulder. A minute after the second shot was fired, Mr. Osmaston's chaprassi, who was at the *machan*, hearing his master's cries for help, rushed down the ravine, and found the tigress stone-dead and Mr. Hansard lying insensible in the water at the bottom of the ravine. After the tigress had let go her hold and rolled down the slope, Mr. Hansard, thinking she would come back for him, had crawled down into the ravine, only to find himself within 10 yards of his enemy, who was of course already dead. It was lucky for him that the shot against her spine had made the tigress at once relax her hold of him, otherwise he would have rolled down with her and been certainly killed in the fall.

Measured soon after death the length of the tigress was found to be 8 feet 8 inches. Her canines, as said before, had been worn down, all but one, to mere stumps. Some of them were cracked and chipping off, and two were quite decayed with a hole running through the centre. The buffalo killed by her had not a single tooth-mark

on it, and hardly any portion of it had been eaten; its neck had been broken. The tigress was in miserable condition, hardly any fat being found even round her kidneys. Although she killed a good deal, her broken teeth must have prevented her from eating anything like a full meal.

Mr. Hansard was attended to immediately by the Native Doctor attached to the School, and on the third day was carried into Chakrata, where, under Dr. Butterworth's skilful treatment, he made such rapid progress towards recovery at the Military Hospital, that before the end of June he could be removed to Mussoorie, a distance of 40 miles. At Mussoorie, however, the results of blood-poisoning manifested themselves in feverish symptoms of a very severe type, and a series of abscesses formed at the end of the wound behind the ear, which, pressing up against the brain, rendered him delirious for weeks. He has now, however, got through the worst, and it is to be hoped that plenty of rest and a good climate, combined with his youth, will soon enable him to recover his health and strength completely.

FOREST FOLK-LORE.

It is of little use now-a-days in India to bewail the loss of some of the older customs which the general advance of western ideas, and especially the establishment of British courts of justice, have all but swept away. Some of the old institutions, if not perfect, were better suited to the mass of the people than is the procedure of our tribunals. The old village punchayet used to exert a powerful and, on the whole, beneficent influence, especially in enforcing the local code of morals. I was once a spectator of a most interesting scene which took place among the hills of Coorg, a small principality which fell to us by the fortune of war in 1830. It is inhabited by a well-made, handsome, hardy race of mountaineers who managed their own affairs, religious, social and political, without the aid of a single individual of the Brahman caste. This happy state of things has all but passed away already, and while western civilization has done some things for Coorg, it has not been of unmixed advantage to the honest, manly and lofty character for which the Coorgs were once well known to their neighbours. Settled in a corner of the western mountains of India they held their own courageously against all comers, and refused to bow the neck to either Hyder Ali, the sovereign of Mysore, or to his cruel and fanatical son Tippoo Sultan. This little land, measuring but 1,200 square miles, has many traditions of brave deeds, of

brave men and women, and its children may well be proud of it, its beautiful hills and forests and its wide-stretching rice fields lying in the deep valleys.

About five-and-twenty years ago the eldest son of a leading Coorg house asked me to be present at a gathering which would greatly interest me. Accordingly, we went together next day to a spot about two miles from my camp. As we wound down the hills I saw that a large number of Coorgs, men and women, was coming in from all sides and meeting in a valley below us. The sight soon became a very striking and remarkable one. A long valley enclosed on three sides by lower hills, down which rough paths led, was blocked to the south by a far higher hill with natural terraces. Near the top of this hill were three splendid trees growing side by side, and under these were the leading men of Coorg, seated in order of rank on either side of the principal man of the land, a fine old gentleman, fully 6 feet high, who had defended the Bux stockade against our troops when we conquered Coorg. All present were in full dress, long-flowing garments, generally white, girded with ample red and black and yellow waistcloths carrying the handsome small silver sheathed knife, while a leather belt over the girdle had slung in it, behind, the large and formidable war-knife. Many, too, carried the small leather targe. A neatly bound turban, or a peculiarly tied handkerchief, was on each head, the legs bare. I sat on one side, for the gathering was a purely native one. In front of and on both sides of the "conscript fathers" and seated at ease or standing and chatting were about 2,000 Coorg men, and many women in their long white veils and petticoats and gay jackets. Behind them again were groups of Holeyas, the agrestic slaves of the Coorgs, a race of squat but powerful dark-skinned men and women. With them were a few Yeravas and other field labourers and some Cooroobas, a jungle tribe. At the command of the headman, silence was enforced and all drew nearer, leaving an open space in front of the judges, for a very important trial was the cause of this gathering. A Coorg, a man of high family, the heir to the head of one of the *naads* or great septs into which Coorg is divided, had been detected in adultery with a woman of the degraded Holeya caste. He was brought before all, his knife and girdle having been taken off him. Quietly, and very solemnly, the inquiry proceeded. Questions were put, witnesses examined, the Holeya woman herself being brought up for a few minutes. The case was proved. The accused bore himself with great dignity, scorning to tell an untruth, though he evidently keenly felt the shame that had fallen on him. At

length the headman rose and a dead silence fell on all. Addressing the man before him he rehearsed shortly his crime, the shame of it, the fact of his fair trial, and then pronounced the sentence, that "from the next morning's dawn the offender should be *put out of wood and water* within the confines of Coorg." A long drawn breath was all the response that came from the assembly. For a minute the unhappy culprit stood motionless, he then threw his hands up over his head, a prolonged quavering cry of the deepest distress issued from his lips, and turning he walked slowly away, alone. All his life was blasted, for from that day no Coorg could offer him shelter, or food or drink. Exile, hopeless and endless, was all that now lay before him. Slowly and quietly the assembly broke up, and the groups melted away among the surrounding hills and woods as the evening shadows began to fall on the soft and beautiful land from which Appaiya was henceforth an outcast.

About the same time it was my fortune to come across two other very interesting sights in this same country of Coorg. One was a religious ceremony performed quietly by the head of a small house. The name of this individual was Ootiah, a man fond of sport and possessed of great skill in wood-craft. Accompanied by the members of his household and a few others he led two buffaloes, both males, to a small glade in the forest, and after some invocations addressed to the demons of the forest he slew one buffalo by cutting its throat, and then sprinkling some of the blood on the other buffalo he turned it out free to go where it listed. There was very little circumstance accompanying the sacrifice. It was performed quietly, the spectators looked on quietly, and then all returned as quietly to their houses. I could get very little information on the matter, further than that it was a ceremony which that house had to perform at stated intervals of several years. It was not general in Coorg, nor could I discover that there was any ground for connecting this worship in a land like Coorg with the ritual of the ancient Israelites. It was, apparently, no more than a mere coincidence.

But there is more than coincidence in the fires that are lit on Midsummer eve and in the ceremonies that accompany them. In France and in Ireland to this day these fires are not unknown, and St. John's eve is a great feast among the Irish peasantry. I saw in South Coorg almost exactly the same ceremonies take place as prevailed, if they do not still prevail, in Ireland, and on Midsummer eve. They were not performed by Coorgs, but by Hindoos resident in Coorg. A large shallow, basin-shaped exca-

vation about 4 to 5 feet in diameter and some 9 inches deep in the centre was prepared in the morning. It was filled with wood closely packed, and towards evening this was carefully set on fire, and fed till the whole pit was filled with a glowing mass of bright embers. Round this the people danced, the men alone, the women being seated a little apart, and joining in now and then in the singing, which was kept up unintermittingly, accompanied by the constant beating of the tom-tom, the wailing of a kind of clarionet, and flourishes on a large twisted brass horn. Small supplies of wood kept the fire in an intense glow. After a time, the greater number of people cleared away to either side, two or three men alone remaining, facing each other on opposite sides of the pit. Some light wood was thrown in, and as it blazed up, children, young children, were thrown through the flames from one side to the other and caught by the men standing there. Then, with loud shouts, while the music played louder and louder, faster and faster, one after the other, men, and then the women, ran through the pit, barefooted. As a matter of course, one foot was for a moment in the glowing embers. No accident happened, for the men on either side immediately seized anyone who stumbled, but for all that there was no doubt that some of the devotees must have scorched themselves badly. The embers that had been scattered during this part of the performance were all then swept back into the pit, and the singing and music, accompanied by wild shouts, varied by quieter intervals when the women alone sang in long, wailing, mournful notes, went on for three or four hours, when, the fire having burnt itself out, the crowd gradually dispersed and all was quiet. The coincidence of season of year, and of the ceremonies, and the character of the music, chiefly sad and wailing, all combine to make it almost certain that this passing through the fire in India is directly derived from the worship of Baal of old.

But incidents such as I have just described are now-a-days very rare, for India has in the last 25 years altered, in externals at all events, more, perhaps, than it did in the two centuries preceding that period.

III. Notes, Queries and Extracts.

Forestry in South Australia.—You will of course be aware to what an extent democratic influence prevails in these Southern Colonies of ours, and this being the case, you will not be surprised to find that, however we may plan or scheme for what we regard as the best interest of our forests and everything connected therewith, we are not always successful in securing the absolutely indispensable assent of the various popular representatives thereto. As a consequence, we cannot boast of anything like so complete a system of forest management as you have firmly established under a more imperialistic régime. Yet, while unable to vie with you in such a well-elaborated system, we still, under our somewhat more straitened circumstances, can justly pride ourselves on taking the lead in this colony in bringing before the public the importance of Forest Conservancy, and can point to the work which has been done, both in output of timber from our forests and establishment of promising plantations, as ample proof of the energy and determination which we intend throwing into the pursuit of so grand an object.—*(Letter from South Australia).*

Number of copies of Working-Plans.—In Circular No. 11F, dated 25th May, 1889, the Government of India is of opinion that sufficient experience has now been gained as regards the form in which Working-Plans for Forests should be prepared to allow of the diminution of the number of copies distributed. It is, therefore, decided that in future the issue will be reduced from 100 to 30 copies. Of these, 6 copies will be for the use of the Divisional Forest Officer concerned, for the Conservator of the Circle, and for the Local Government or Administration, respectively; while the remaining 12 copies will be forwarded to the Revenue and Agricultural Department of the Government of India for record and for the use of the Inspector General of Forests. This decision of the Government of India has been taken none too soon.

THE BIG TREES OF VICTORIA.—As in your highly valuable journal of yesterday and this day my name has been alluded to in reference to the giant trees of Australia, and as some of the remarks might imply that in my statements I was prone to exaggerations, I now beg, by permission of the Ministerial chief of my department, to offer a few observations on the points under discussion. When some months ago the public announcement appeared that a tree had been found at Neerim estimated to be 520 feet high, I promptly disclaimed any personal cognizance of such a tree, adding that I was, from autopsy, only aware of maximum heights approaching 400 feet. Furthermore, on various occasions I pointed out that when travelling—often as a solitary wanderer, with only slender resources—through our primeval forests at the early time of Victorian colonisation, no such facilities as heavy survey parties now enjoy were at my command to cut base-lines through the jungle for tree measurements in any of the narrow glens in which only, and then exceptionally, the real giants of our wood-lands were occurring. I further have always been particular to mention that in measuring Eucalyptus trees *in situ* a further difficulty is encountered through the irregular growth of their ramifications in contrast to what can thus be done with straight-growing conifers, inasmuch as the last leading portion of an eucalypt would also be quite spreading. In every instance, also, when I published, as occasions arose, any observations on extraordinary heights of trees recorded by others, I have been explicitly careful in giving the names of the observers, without, however, making myself responsible for any over-calculations of theirs. Indeed, I would simply say, with an ancient classic author, "*Relata refero.*" Thus the Dandenong tree, which, through public remarks of Mr. Boyle and Mr. Caire, excites just now so much interest, has never been seen by myself. Still it remains a very memorable object, well worthy of a visit, just as the enormously ample base of a hollow eucalypt, transferred to the Centennial Exhibition, attracted much attention. The stupendous height of 470 feet assigned to a particular Eucalyptus tree (somewhere near the base of the Baw Baw Ranges) by Mr. G. W. Robinson was probably obtained at mere guess during a hurried exploration tour, but such a statement from him as a professional surveyor would carry with it great authority. Through the kind attention of our renowned fellow-colonist, Mr. A. W. Howitt, I received some time ago information of a tree of *E. amygdalina*, which grew on the southern slope of the Yarragon Ranges, where it was felled, according to Mr. T. Rollo, by a settler, Mr. Dickinson of name, in clearing for his dwelling; the length mea-

surement of this tree was 410 feet, but unfortunately it was burnt off. Mr. C. Walter actually measured and re-measured, 1866, a fallen tree, also of *E. amygdalina*, about two miles north of Fernshaw, and found it to be 392 feet long; it was felled by a splitter, Hutchinson by name. But as the very oily foliage of this species, also chiefly used in Mr. Bosisto's extensive distillations, so easily ignites, and as the wood of this kind of tree on damp ground is so readily perishing, we are as a rule deprived of the chances of re-measuring fallen or felled trees, however much we may wish to satisfy scepticism in this respect. But we might just as well discredit the occurrence, certainly very rare, of trunks of todea-ferns over two tons in weight, notwithstanding a specimen heavier still, and weighed at a reliable weighbridge, being placed by me permanently in front of the Exhibition building. For some other measurements of tree giants of ours reference may be made to the fth decade o the *Eucalyptography*, where also details of enormous stem diameters and stem circumferences are set forth, and where, likewise, are alluded to data about huge Tasmanian eucalypts, as locally furnished by the Rev. J. F. Ewing, and as rendered further known already through Professor Henfrey's *Botanic Gazette*, as well as through Dr. M. T. Masters's early writings. Sir William Denison secured there also grand results in this respect nearly 40 years ago. When last year the question of "the tallest trees of the world" was anew discussed in connection with the Centennial Exhibition, I suggested specially to the Hon. John Forrest, the Minister of the Lands Department of Western Australia, that the most gigantic of the karri trees might be accurately measured by the local surveyors, in confirmation of, or collateral to, the records left by the late Captain Pemberton Walcott, of Karridale, who spoke of a tree of that species fully 400 feet high, and who related astounding basal widths; while another most trustworthy West Australian settler, Mr. T. Muir, of Lake Muir, found karri stems 300 feet long to the first branch, as reiterated in my *Select Plants*. I saw there myself, particularly towards the Gordon River, karris of marvellous height in dense underwood. Here with us giant trees should be particularly sought for where the eucalyptus forests merge into those of the evergreen beech. What the recently-discovered extensive sequoia forests in Southern California may yet reveal of colossal trees remains yet to be ascertained. Professor Brewer noted several species of *Pinus* in the United States, exceptionally, as 300 feet high, but these proud individual trees went likely out of existence. Here I have, with others, repeatedly urged that tracks should be cut to any yet remaining or

newly-discovered giant trees for easy approach of visitors to the spot, and that such wonders of the empire of plants should be retained as State property, duly protected by law, the ground to be cleared around, and to be fenced off, so that also the next generations may yet enjoy a view of these living wondrous structures of centuries' growth. As the Australian Association for the Advancement of Science will hold its next annual meeting in Melbourne, let us fain hope that the few veritable giants of the forests at present known may come within convenient reach in time for the meeting—January, 1890, also to the members, their ladies and friends, many from the neighbouring colonies, and, as the railway by that time will be ready to Bright, the Association may, perhaps, avail itself extensively of the chance to visit the Australian Alps right up to the glaciers.—BARON FERD. VON MUELLER.—*In Argus.*

THE ODORIFEROUS GRASSES OF INDIA AND CEYLON.—There is great uncertainty about the number of odoriferous grasses growing in India, on account of the confusion in which the subject has been involved by various botanists and writers, who overlooking varieties caused by cultivation or otherwise, have unconsciously multiplied species.

This can only be cleared up by a practical botanist who has travelled all over India and Ceylon, or had before him a collection of plants from these countries. There is no doubt that when he comes to describe the order *Gramineæ* in his Flora of British India now in course of being written, Sir J. D. Hooker will, with the materials in hand, throw much light on the subject.

The present contribution is intended as the description of an *Andropogon*, which I think is a new one, and does not presume to clear up the obscure points about the scented grasses which may exist in India, for my knowledge of botany in general is poor and limited to a few tracts of the Bombay Presidency.

Before I describe this *Andropogon* to you, let me briefly mention those that are already more or less known. We find the following growing wild or cultivated in different parts of India and in Ceylon and yielding aromatic oils and other scented products:—

1. *Andropogon Nardus*, Linn.—This is a magnificent looking grass, with leaves glaucous, large and attenuated at the end ; the stem six feet high or even more, with a long drooping panicle about two feet or more in length, consisting of numerous panicled branches. According to General Munro, the distinguishing features of this grass are its rufous colour, short spikes, and narrow leaves. This plant, which is said to grow wild in Ceylon, is also met with

in certain parts of the Madras Presidency, particularly in the Southern portions, near Travancore. It is also cultivated in Ceylon and Singapore, whence considerable quantities of the oil distilled from it finds its way to the European markets, where it is known under the name of Citronelle oil. (*See* a beautiful drawing by Trimen and Bentley in their work of Medicinal Plants, p. 297).

2. *Andropogon citratus*, DC.—This grass yields the lemon grass oil, or oil of verbena of commerce in India. It is found in gardens, and appears to occur only in the cultivated state, although it is stated that in Ceylon it may be seen growing wild side by side with the first-mentioned species. The close resemblance it bears to the former would seem, however, to suggest the idea that it is only a cultivated variety of *A. Nardus*.

The specimen on the table, collected in the garden of the Bishop of Damaun at Colaba, belongs to this plant, which is also shown in *Plate* 280 given by Wallich in his *Plantæ Asiaticæ Rariores* under the name of *Andropogon Schœnanthus*. *Andropogon citratus* is known to the natives of India under the name of *Oli-cha* (green tea), and is in fact used at times for aromatizing this beverage and in flavouring curries. An infusion of the leaves is used as a diaphoretic in febrile cases and also in flatulent affections. The oil is used internally for allaying vomiting and gastric irritability in case of cholera. It is also used externally in rheumatism.

The properties and uses of the last-mentioned species *A. Nardus* are similar to those of *Andropogon citratus*.

3. *Andropogon laniger*, Desf.—(*See* Fodder Grasses of the Plains of North-Western India by Duthie, *Plate* 23). This grass, known as woolly *Andropogon*, grows extensively on the northern coast of Africa from Egypt to Algiers. It is also found in Arabia and in the north of India. According to Mr. Duthie it is common on cultivated land in Sind, the Punjab, Rajputana and parts of the N.-W. Provinces, and it is also recorded from Thibet at an elevation of 11,000 feet. I had only one specimen (now lost), said to be from the Deccan. It is not ascertained whether this grass is distilled for the production of its oil, but its roots are sometimes used like khas-khas in the manufacture of tatties.

4. *Andropogon versicolor*, Nees.—This grass exists in the more elevated parts of the Central Provinces of Ceylon. Mr. Thwaites says :—"The inflorescence of this species has, when crushed between the fingers, a rather agreeable aromatic odour. The essential oil appears to be situated principally at the base of the spikelets."

5. *Andropogon Schœnanthus*, Linn ; *A. Martini*, Roxb.; *A. pach-*

nodes, Trin. (Sp. Graminearum, Vol. III., *Plate* 327) *A. nardoides*, Nees; *A. calamus aromaticus*, Royle; (Illustrations of Him. Botany, *Plate* 97), a variety with dense inflorescence.

This grass, named Ginger-grass by Europeans, is known to natives as *Rosa*, *Rasha*, *Rose*, &c. It is of all the *Andropogons* the best known. It appears from the *Bombay Gazetteer*, Vol. XII., that in Khandeish people distinguish two varieties, one with bluish and the other with white inflorescence. This is what the *Gazetteer* says :—" Another important branch of distilling is the preparing of oil from the forest grass known as *Rasha* (*Andropogon Schœnanthus*), which is of two kinds, one with bluish and the other with white flowers. The oil produced from the first is of a green colour, and is called *Sophia*, that from the other is white, and is called *Motia*. The *Motia* oil fetches a higher price than the *Sophia*. Both grasses grow freely, though not very widely, in many open hill sides in West Khandeish, especially in Akrani."

An intelligent Parsee, who some years ago farmed a field in Khandeish for distilling oil from this *Andropogon*, tells me that there is no such thing as blue or white varieties; that the grass which bears bluish-green and white inflorescence when young becomes red when ripe. This accords with my observation regarding the changes of colour which this *Andropogon* undergoes as it grows in the Deccan and Konkan. When young the hairs of its spikelets give it a peculiar greenish-blue or whitish appearance, but when it grows older the whole of the inflorescence with the bracts, or floral leaves, especially when these are exposed to or dried in the sun, becomes reddish as anybody can verify this fact on their way to Poona at the end of the rainy season, and from the several specimens laid on the table collected in the Deccan, Thana and Khandeish. Those of the last place and the two bottles of oil were kindly sent to me by a Government officer. On examination you will find all the Khandeish specimens to be of reddish-brown colour, and the kind of oil named *Motia* is of a rather clear golden colour, resembling olive oil, and the *Sophia* turbid or reddish, not white, as stated in the *Bombay Gazetteer*. There are also on the table specimens received from Nasik, the inflorescence of which is of a beautiful admixture of bluish-white and reddish colour.

Now the question is whether the two varieties, blue and white mentioned in the *Gazetteer*, are coloured red by age. It is probable that the same plant may bear inflorescence bluish-white and red at different stages of its growth, and the colour and density of its oil may vary according to the process of distillation employed, or according to the age at which the plant is cut.

It may also happen that instead of varieties there may be distinct species. Roxburgh, in his *Flora Indica*, describes an aromatic species under the name of *A. Iwarancusa.* Some botanists, however, think that this description applies partly to *A. laniger* and partly to *A. Schœnanthus.* Others believe that there is in Northern India a grass with white hairs which, though closely allied to *A. Schœnanthus*, is a distinct species.

Fluckiger and Hanbury, in describing in their Pharmacographia, page 663, the uses of grass oil say :—" Grass oils are much esteemed in India as external applications in rheumatism and other such affections ; *Rusa oil* is said to stimulate the growth of hair. Internally grass oil is sometimes administered as a carminative in colic, and an infusion of the leaves of lemon grass is prescribed as a diaphoretic and stimulant. In Europe and America the oils are used almost exclusively by the soap-makers and perfumers. The foliage of this large odoriferous species of *Andropogon* is used in India for thatching, it is eaten voraciously by cattle, whose flesh and milk become flavoured with its strong aroma.

But the most remarkable use made of any grass oil is that for adultering *Attar of rose* in European Turkey. The oil employed for the purpose is that of *A. Schœnanthus*, Linn., and it is a curious fact that its Hindustani name is closely similar in sound to the word Rose. Thus under the designation *Rusa*, *Rowsah*, *Rosa*, *Rose*, or *Roshe*, it is exported in large quantities from Bombay to the ports of Arabia, probably chiefly to Jeddah, whence it is carried to Turkey by the Mahomedan pilgrims. In Arabia and Turkey it appears under the name of *Idris Yaghi*, while in the attar-producing districts of the Balkan it is known, at least to Europeans, as *Geranium oil* or *Palmarosa oil.* Before being mixed with attar the oil is subjected to a certain preparation, which is accomplished by shaking it with water acidulated with lemon-juice, and then exposing it to the sun and air. By this process, recently described by Baur, the oil loses its penetrating after-smell, and acquires a pale straw colour. The optical and chemical difference between grass oil thus refined and of attar of roses are slight, and do not indicate a small admixture of the former. If grass oil is added largely to attar it will prevent its congealing. "

Dr. Dymock, in his interesting work " the Vegetable Materia Medica of Western India." says :—" The annual export of *Rosa oil* from Bombay to the Red Sea ports and Europe exceed 40,000 lbs.; it is much used by the Arabs and Turks as a hair oil. The Bombay dealers know nothing of its being used to adulterate otto of roses. In India sandal-wood is used for the purpose." The learned

doctor makes no mention of two varieties of *Koosha grass* and their oils described by the *Gazetteer*.

All the *Andropogons* mentioned hitherto belong, as you will perceive, to the section called *Cymbopogon*. There are, however, two other species also found in India which belong to the section *Gymnopogon*, one of these is *Andropogon muricatus*. This is a tall grass plentiful in the moist plains of Southern India particularly Bengal. The ancient rulers of the country appear to have levied an impost upon its cultivation. This grass is known on this side of India as *Valeru* and *Vala* and is used in some provinces as a thatching material or as fodder. When young it is eaten by buffaloes. The roots, named *khas-khas* are used in making the fragrant fans and tatties. It is said that the roots are exported to Europe, where they are employed in perfumery, and they are used in India in cases of fever in the form of an infusion, &c.

In the Jhang Settlement Report, it is stated that its tough roots are used in making ropes, and also that the brush employed by the weaver for arranging the threads of the web-baskets are made of the stems. In Oudh a perfume called *Itar* is extracted, and used medicinally. (*See* Dymock's "Vegetable Materia Medica" and Duthie's "Fodder Grasses," *Plate* 24).

All the *Andropogons* mentioned above have been described by various authors, but the following, as far as my knowledge and reading go, has not been described by any; I have therefore named it *A. odoratus*.

It is known to the natives as Gawat Wedi. I came across it whilst arranging plants and dissecting spikelets of grasses for Dr. Lisboa.

Description.—Culm erect, 3-5 feet high, sometimes branching from the lower part, glabrous; nodes long-bearded, leaves lanceolate, cordate at the base, acute or acuminate, with a few long hairs; the lower cauline and radicle leaves long; the upper small but their sheaths very long; ligula small; spikes numerous, erect branched, pedicellate (the pedicel of the lower spikes longer), and congested at the end of a long peduncle without a sheathing bract and forming an erect, dense, ovoid panicle. The rachis, pedicel and the spikes covered with long silky hairs. Spikelets nearly two lines long of a purple colour, the sessile and the pedicellate nearly similar; outer glume of the sessile spikelet rather thin, many-nerved, somewhat obtuse and covered with long silky hairs, with a pit in some spikelets of the same plant and absent in others; second glume as long as the first or little longer, but broader, thin, and keeled; third glume thinner and hyaline; fourth glume smaller or an awn ½-1 inch long,

with an hermaphrodite flower at the end of the pedicel. Pedicel of the pedicellate spikelet covered with white hairs, but the spikelet almost free of hairs. Outer glume stiff with five or more nerves not prominent, almost obtuse; second glume thinner, with three nerves somewhat broader but as long as the first; third glume hyaline, smaller; fourth glume very small, hyaline or none; no awn; at the top of the pedicel three stamens not well formed and not as large as in the hermaphrodite flower.

This grass is common at Lanowli on the right side of the station in the fields beyond the woods, where it grows along with *Pollinia tristachya*, Thw.; *Ischæmum laxum*, R. Brown; *Arundinella nepalensis*, Trin., and other annual grasses. The purple-coloured spikes of *A. odoratus* and *Pollinia tristachya* congested at the end of long peduncles form a most elegant and beautiful feature of the scenery of the field towards the end of the rainy season. It is said to be not uncommon at Khardi, Thana. I have found it in the collection received from this district.

From the description and from the specimen laid on the table, you will see that this *Andropogon* belongs to the section *Gymnopogon*, and is different from all other aromatic *Andropogons*, and as I believe it to be a new species, I have called it as stated above, *A. odoratus*. The leaves and the inflorescence also, when pressed between the fingers, emit an odour altogether different. If you examine the small quantity of volatile oil, of a beautiful golden yellow colour, which is on the table in a tiny little glass tube marked *A. odoratus*, and compare it with that of *Martini* in another similar tube, also on the table, extracted by Mr. Prebble, of Messrs. Kemp and Co., you will certainly pronounce that the odour of the new species is soft, sweet, and more agreeable than that of *A. Martini*; and if it be manufactured on a large scale, with great care and by an improved process, if practicable, it may prove superior even to that of *A. Nardus* and *A. citratus*.

Chemical analysis could not be undertaken, because the quantity of the oil extracted was too small for the purpose.—(Mrs. J. C. Lisboa *at Meeting of Bombay Natural History Society*).

THE

INDIAN FORESTER.

Vol. XV.] August, 1889. [No. 8.

A NEW VIEW OF JARDINAGE.

IV.

EVERY one of our readers who has imbibed his first ideas of forestry from Nancy will have welcomed the appearance of their old veteran master in the present discussion. May the letter from him, which was published in our July issue, be only the forerunner of many others to follow.

We regret that a personal element has been introduced into the discussion. Our second article, which appeared in February last, merely stated that the system of jardinage and the developments of which it is capable have not received fair treatment at the hands of the great body of French foresters. To prove our position it was necessary to quote from the text-books which have served as the basis of teaching in France since the establishment of the Nancy Forest School at the commencement of the second decade of this century. We meant no personal reflection on the grand old foresters who wrote them.

Mr. Porter has in no way shaken our position, for he has brought forward no argument against it. His attack on it is simply limited to asserting that our article contained "incorrect statements about the teaching of the French school." Without intending any disparagement to that great institution, which from the Rue Girardet has for the past 60 years moulded, through its alumni, the systems on which the splendid forests of France are now managed, we have no reason to withdraw or modify any of the statements made in the article in question. We have taken the trouble to read through carefully again the various French text-books, and not excepting even Boppe's *Traité de Sylviculture*, which had not appeared when our article was written, they have again left on our minds the impression that jardinage as a system

of culture can be adopted only as a *pis aller*, *faute de mieux*. Besides this, we have discussed the matter with several old Nancéens, and they entirely support our statement.

Mr. Porter says, "as for the *mode des éclaircies*, that it is the method *par excellence* for forest in the plains no one will deny." We have seen in our rambles a very large area of our plain forests, and can without hesitation say that for 99-100ths of them the *mode des éclaircies* would not only be the worst possible system of treatment to apply, but is practically totally inapplicable.

The *mode des éclaircies* is certainly a most excellent one wherever circumstances are favourable for its adoption, and we have no quarrel with it at all; but we must be careful never to lose sight of the proviso that circumstances should be favourable for its adoption. It is in forgetting this very obvious proviso that foresters whose ideas are based only on what they have observed in France are apt to attempt to generalise the system too much in India. In order to apply the system we require several concomitant conditions, the principal of which are (i) more or less complete uniformity of the main factors of growth, *viz.*, soil and climate, (ii) species, soil and climate capable of producing a more or less lofty, more or less complete, leaf canopy, and (iii) two, or at the outside three, gregarious species, all of which are readily marketable from the time they reach the pole stage. How many forests are there in India which present these three conditions?

The *mode des éclaircies* and *jardinage*, as systems of treatment and management of forests, are the very antipodes of one another, and it is surely wise to admit that in the boundless domain of nature there are numerous intermediate terms between these two extremes, each being the best under the peculiar circumstances proper for it. The *mode des éclaircies* is undoubtedly the best if we have to do with normal or nearly normal and uniform conditions, and jardinage, in the strict sense in which alone it is understood by the dominant school of French foresters, is as unquestionably the best where the conditions are peculiarly difficult for regeneration and growth. But which of these two systems are we to apply when neither of these extreme classes of conditions prevails? The obvious answer to this question is that we should in each case, regardless of the one and the other system, devise and apply those measures of treatment and management which yield the best results in the particular case. It is no use attempting to force nature to move in grooves diametrically opposed to her own ways, and foresters who, like M. Gurnaud, rebel against futile attempts to put nature into a strait waistcoat, deserve the sympathy and

thanks of all foresters who, while not neglecting local conditions and requirements, endeavour to arrive at the fundamental principles of their science in each case through a mass of obscuring local details.

As a sign of the times, we welcome the inclusion, in M. Boppe's recent excellent work, of a short description, under the designation of *traitement jardinatoire*, of the group method. May it be an earnest for a more just appreciation, on the part of our French comrades, of systems of culture to which they have hitherto been strangers. Before condemning such systems, they should remember that even their own pet system (*mode des éclaircies*) has, to use M. Broilliard's words, "hardly passed its infancy." Indeed, it was to avoid the defects inherent in that method that the group method was devised. Where this latter has been practised for some time it has answered the expectations of its projectors; and to attempt to cast ridicule on it by ironically saying that it "is to prove 'nature's own method,'" or that "Dehra Dún is in possession of *the true natural method*," is not the way to prove that it does not answer its purpose. M. Broilliard says that "the Nancy Forest School is proud of never having deviated from these two fundamental principles, *viz.*, to ensure natural reproduction, and to obtain the most useful material." Now, the group method not only aims at securing natural reproduction, but, as a necessary consequence of the principle on which it is based, actually secures it with greater certainty than the *mode des éclaircies*; and as regards the production of the most useful material, Boppe himself says that in the group method "the *jardinatory* fellings made for securing the new generation have for effect the favouring of diametral growth. Thus the crop preserves all its vigour, and in the end, as a consequence of its passing insensibly from a close-canopied state to an open one, and finally to one in which the trees are isolated, it consists only of powerful stems of priceless value." That M. Broilliard has not correctly understood the group method is evident from his comparing it to the "transformation fellings, * * * the object of which is to constitute ultimately a uniform stock by gradually transforming the irregular jardinage forest into a regular and uniform one."

Again, in condemning the rage for manufacturing *systems*, M. Broilliard puts into the hand of his opponent the most fatal weapon that can be turned against himself. Says he:—"Nature does not produce systems. Satisfactory and true methods for treating forests are the result of experience gained by observing facts (*experientiâ rerum*)." That is just what the uncompromising defenders of the *mode des éclaircies* especially fail to realise. They build

up an ultralogical system, moulded on the requirements and circumstances of a *normal* or *ideal* forest, divide the *actual* forest up into a fixed number of sections, and try to force them into a framework of the most beautiful symmetry, although, from the time that the universe was an "abysmal void," nature has never tolerated being put into fetters. When they come to draw up their working plans, the *parcellaire* or formation and examination of compartments brings out at every step wide divergences from the normal state, which, however, these relentless seekers after the ideal state only make it their highest pride to circumvent, quite heedless of whether some less uncompromising treatment might not yield much superior results in the particular case. The glory of those who rebel against the tyranny of the *mode des éclaircies* is that they seek in each case do what is best, totally disregardless of paper systems. They do not, in their treatment of high forest, rigidly confine themselves to only two diametrically opposed lines of work, but give themselves complete latitude to diverge from those lines as widely as the circumstances in each case require, in other words, allow themselves to be guided solely by hard facts, by *experientiâ rerum.*

FIRE CONSERVANCY AND THE LEVEL OF WATER IN SPRINGS.

It is not often that we light upon facts establishing conclusively the many benefits conferred on the human race by the conservation of forests, and it is, therefore, with much satisfaction that we quote below extracts from recently published State papers.

In his Forest Administration Report for 1887-88, Mr. Shuttleworth, Conservator of Forests, Northern Circle, Bombay Presidency, writes :—

"It is always difficult to prove that fire-conservancy can do any good and has had any appreciable effect beyond the improvement of the young timber and of vegetation generally in the forests protected against fires; but there is a remarkable circumstance in the Khándesh District, which has attracted the notice of Land Revenue Officers, and of the people of the locality, and which, in the Conservator's opinion, owes its creation entirely to improved forest-conservancy, mainly in protection against fires. A general rise of the water level has been observed in the Sávda and Chopda tálukás upon the north bank of the Tápti river. The whole of the uplands comprising the Sátpuda hills, which drain upon the cultivated lands of the Sávda and Chopda tálukás, are included in "Reserved Forests," the boundaries of

which come well down to the base contour lines. Thus the forests constitute a high level natural reservoir, located much above and commanding the entire champaign country between them and the great river, the Tápti, which is the maind rain in this part. Forest conservancy against indiscriminate fellings, against over-powering grazing, against fires, has changed the complexion of the Sátpudas: the forest growth has become more dense, the natural reproduction of the trees much more active and vigorous; the grass in still open savannahs, which are fast disappearing, is forming a thick felt under foot, owing to the root-stocks meeting under ground; and owing to these causes, the water storage power of the Sátpudas has increased very greatly of late years, and will increase more. As the general line of drainage is from east to west, the rise of the water level in the plains has shown itself first at the upper or eastern side, where the forests are broader."

On the above the Government of India, in its review of the Report, remarks as follows :—

"It is noticed with satisfaction that the Government of Bombay has under consideration the question of the extension of fire-protection in the Southern Circle, and intends to increase the responsibility of villagers in respect of fires occurring within the limits of their villages; for Mr. Shuttleworth's remarks (which have been read with great interest), in paragraph 121 of his Report on the results of the exclusion of fire from forest areas, show the advantages derived from fire-protection, and prove the advisability of extending it. The remarks will be brought to the notice of the Editor of the *Indian Forester*."

In connection with this subject, we would invite attention to a note lower down, which we have translated from the *Revue des Eaux et Forêts*.

DESTRUCTION OF THE DEOTA TIMBER SLIDE.

THE following account of the total destruction of the Deota timber slide in the Jaunsar Division School Circle, N.-W. P. and Oudh, by landslips and unprecedented flood on the night of the 9th August last, may interest the readers of the *Indian Forester*, many of whom are acquainted with that forest. The sliding of sleepers commenced this season on the 13th July, and up to the date of the disaster 26,725 metre gauge sleepers were slid to the Thadiar Depôt, situated on the bank of the Tons, from which place the timber is floated in November and December to the Daghpathar Depôt on the Jumna. The slide worked admirably this season, both during day and night, and the addition of the magnetic bells' line solved the difficulty of preventing

damage to the slide by the jamming of sleepers, which was formerly the weak point in its working.

From the 1st to 5th August a good deal of rain fell at Deota, so that the hill sides were thoroughly saturated, and a good many landslips occurred in the neighbourhood of the wet slide, which caused some trifling damage, and partially interrupted the sliding work on the 7th and 8th August.

On the night of the 9th, about 8 P.M., an unprecedentedly heavy storm broke over Deota, and the rain gauge, which is capable of registering 6½ inches, soon overflowed, so that probably 10 or 12 inches of rain fell during the night.

This sudden downpour, which appears to have been heaviest from 9 to 10 P.M., caused numerous landslips, principally in the Partil and Temple blocks, which, together with an immense volume of water, soon fell into the "khud" at the head of the timber slide, the flood arriving there suddenly about 10-30 P.M.

The small brook close to the Deota bungalow, which is scarcely sufficient for the water-supply during the hot weather, is stated to have become a roaring torrent; and what was formerly looked upon as a stable precipice above the forest garden suddenly collapsed, burying the garden in its *débris*. The flood in the main Deota "khud" must have been terrific; and, judging from the marks left, the mud and water was probably 40 to 50 feet deep, and the force of the torrent such that 10 feet deodar logs from the Deota forest were carried right into the Tons river, and whole trees from the Thadiar valley were also washed away.

Rocks and boulders weighing 50 or 60 tons were also transported by the action of the mud for a considerable distance; whilst smaller ones were carried right into the Tons river. At various places on its downward course the torrent seems to have been temporarily stopped by accumulation of *débris*, so that it arrived at the Thadiar Depôt in a series of rushes at intervals of about 10 minutes.

Nothing could of course withstand such a flood, and the whole timber slide, the length of which was 2¼ miles, was, with the exception of about 10 chains in the rice fields near Thadiar, completely wrecked, and even the heavy beams of the bridges were carried into the Tons river, some of the *débris* going as far as the Railway at Rajghat.

As already stated the flood reached the head of the slide about 10-30 P.M., and so sudden was the rush of water and *débris* that 12 chowkidars who were in charge of the sliding work were surprised and swept away together with the cave in which they appear to have been asleep.

At the head of the slide about 6,000 sleepers, which were stacked on the usual sites, were washed away, and either ground to pieces in the torrent, or carried into the Tons river.

At the lower depôt on the bank of the Tons about 37,000 sleepers were stacked at the depôt, where it has been the custom to stack them during the last 10 years; but the force of the torrent was such that about half of the depôt land was carried away, and 13,500 sleepers went adrift. At a short distance above the Thadiar Depôt the stream split into two branches, one of which poured down past the forest bungalow, bearing away part of the verandah, and destroying the out-houses, also threatening the safety of the Thadiar suspension bridge.

The physical features of the Thadiar stream have been completely changed, and waterfalls and "khuds" formed at places which were formerly of easy gradient; the whole valley being now in such an unstable condition, that any idea of reconstructing the slide, even on a temporary plan, is out of the question. It may be stated here that the Deota timber slide was constructed in the year 1876 and 1878, the original cost being Rs. 26,000, and the amount of timber exported by its agency amounts to about five lakhs of sleepers.

The saving due to the construction of the slide, up to the date of the catastrophe, amounted to about Rs. 20,000, not to mention the fact that without its aid, owing to scarcity of labour, the timber from the Deota forest could not have been got out at all.

E. McA. M.

THE MENSURATION OF TIMBER AND TIMBER CROPS.

(Continued from page 262).

8. *Number, selection and measurement of the sample trees.*

The number of sample trees to be measured will depend on the method of survey adopted, and on the size and the degree of uniformity of the crop. The method of survey which requires the smallest number is that of the average tree, 2 or 3 stems sufficing if the crop is regular. In survey by diameter-and-height classes from 6 to 15 trees must be measured. Draudt's method requires from 10 to 15.

Since special circumstances, independent of the method of survey, often limit the number of trees that may be felled, the choice of the method of survey must, in such cases, be regulated by the

number of trees which it is permissible to fell. It must, however, be borne in mind that the greatest accuracy in measuring the sample trees can never compensate for smallness of numbers. Averages derived from the measurement of a large number of trees will, even if the measurements have been made less carefully, be more trustworthy than those obtained with the help of a smaller number of trees. There is less error in *estimating* the contents of a large number of *standing* trees with the aid of Volume Tables, or by means of the *richt*-height, than in measuring up an insufficient number of felled trees *in the most accurate manner possible.*

The care exercised in selecting the sample stems must be in proportion to the smallness of their number. They must be as nearly as possible correct representatives of their class in respect of height, form and branching, and all forked and otherwise abnormal trees should be avoided. Moreover, the boles should be perfectly regular at the places where the diameter has to be measured. At least two diameters should be taken at each place to obtain a correct average. When the number of sample trees to be felled is large, they should be situated at different points of the entire crop. The sample trees should always be chosen immediately after the enumeration survey has been completed, and by the same person who has conducted this survey, and who has therefore a correct and vivid general impression of the character of the crop and the component trees.

The cubing of the sample trees should be effected as accurately as possible by the rules already laid down for the measurement of felled trees.

9. *Valuation survey by means of the* richt-*height.*

The lower diameters of all the trees of the crop being known from the enumeration survey, the total basal area A is calculated therefrom. Next the *richt*-height of a sufficient number of sample stems should be observed, and the average of all these figures assumed as the *richt*-height H_r of the whole crop. The contents of the crop are then obtained from the formula

$$C = \tfrac{2}{3} AH_r + Ah_b.$$

The contents of the branches must be added as a percentage, which must be taken from tables, or deduced from the results of previous surveys of similar crops.

The crop may of course be divided into diameter-and-height classes, and the average *richt*-height determined for each class separately.

10. *With the aid of tables of form-factors or volumes.*

The diameters of all the trees of the crop are already known from the enumeration survey. The heights of a sufficiently large number of trees must be measured, and the average heights which correspond to different diameters determined therefrom. The following is an example, exhibiting a convenient mode of arranging and manipulating the various figures :—

Diameter in inches.	8	10	12	14	16	18	20	22	24	26
	Height in feet.									
Species—Beech, ...	82	98	104	111	111	115	114	115	120	117
	...	96	107	114	112	112	115	112	117	...
	...	...	102	111	...	114	...	...	116	...
Total height, ...	82	194	313	336	223	341	229	227	353	117
Average height,	82	97	104	112	112	114	114	114	118	117
Corrected height,	82	97	104	110	113	114	114	114	116	117

The calculation is completed thus (in the field-book itself of the enumeration survey)—

Compartment 11.

Diameter in inches.	Species—Beech.	Number of trees.	Average height in feet.	Contents. Per tree.	Contents. Total.	Remarks.
				Solid cubic feet.		
8	Here will be recorded the figures of the enumeration survey.	50	82	13·9	695	
10		114	97	25·8	2,937	
12		158	104	41·2	6,510	
14		156	110	60·0	9,360	
16		128	113	82·1	10,509	
18		66	[illegible]	107·0	7,062	
20		42	114	133·0	5,586	
22		19	114	163·0	3,097	
24		12	116	198·0	2,376	
26		5	117	237·0	1,185	
		750	...	...	49,317	

The "contents per tree" are obtained from the tables of form-factors or volumes, as the case may be.

11. *Valuation survey by ocular estimate.*

Two modes of procedure may be adopted—

I.—The contents of each tree of the crop may be estimated, the contents of the entire crop being then obtained by a mere sum of simple addition. Such a procedure, however, takes as much time as a complete enumeration survey based on the actual measurement of the diameters of the trees, and once the diameters have been measured and recorded, there is very little extra trouble in measuring the heights of a few trees and obtaining the contents of the crop by the much more trustworthy method of valuation by the *richt*-height, or with the aid of tables of form-factors or of volumes.

II.—The contents of the whole crop may be estimated *en bloc.* An intelligent forester who has had long local experience in the clean-felling of coupes can often give a fairly accurate estimate of the quantity of produce standing per acre, but the best man is nevertheless liable to make an error of as much as 50 per cent.

12. *Valuation survey by means of tables of yield.*

In this method the surveyor must determine three essential points :—

(*a*). The quality of the soil and locality.

(*b*). The density of the crop.

(*c*). The age of the crop.

The older tables of yield drawn up in Germany omitted the first point. For each forest or class of forest a certain convenient number of classes of soil and locality are established according to the height attained by the trees in each. Hence, for any particular crop in question, we have only to ascertain the average height of the trees, in order to know at once the quality of the soil and locality.

The age of the crop will be known from its past history, if it has one going back far enough ; or it must be ascertained by ring-countings, if some constant relation exists between the number of concentric rings and the number of years in which this number of rings is produced. Otherwise there is no means of obtaining it with any degree of accuracy.

The density of a crop is an extremely difficult thing to estimate with sufficient accuracy. It can, of course, be determined by measuring the diameters of all the trees and thus obtaining their aggregate basal area, but this means almost as much work as far more trustworthy methods of valuation survey with the aid of sample trees.

13. *Choice of the method of valuation survey.*

From what has already been said in describing the various methods of valuation survey, it is clear that this choice in any given case depends—

(*a*). On the required degree of accuracy,
(*b*). On the nature of the crop, and
(*c*). On the number of individuals that may be felled as sample trees.

If the money-value of a crop is sought, as would be required if the crop is to be sold or the forest expropriated, or if the owner wished to obtain accurate statistical data regarding his property, Urich's method should be employed. For the purposes of a working plan a less exact method is admissible, particularly as regards the younger crops, which must be surveyed over again when the plan is revised. Hence for such crops a complete survey is seldom necessary, and in the sample plots the method of *richt*-height and those based on tables of form-factors or of volumes or of yield may be adopted. But where a certain degree of accuracy is required, the method of survey by the average tree may be employed in regular crops, a higher degree of accuracy being secured by the establishment of diameter-classes and the highest by Urich's method, which is moreover the only one to adopt when it is required to estimate the yield in the various marketable classes of converted wood.

The establishment of height-classes gives a great deal of trouble and extra work. It should be avoided whenever possible, that is to say, as often as the heights of the trees composing the crop do not exhibit any marked irregularity.

Chapter V.

On the determination of the ages of trees and of crops.

The determination of the age of trees and of crops is a problem which often presents insurmountable difficulties to the Indian forester, since not only are the ring markings indistinct and

sometimes indistinguishable, but so many of our species form more than one concentric ring of wood each year, and there is nothing to prove that in their case the number of rings is one and the same for each year. The following remarks hence apply only to species which invariably form a single distinct concentric ring of wood each year.

1. *Determination of the age of standing trees.*

The ages of individuals of most of our conifers can, as long as they are branched down to the ground, be accurately determined by counting the number of annual shoots. The age of other trees can generally be told to within 10-20 years by a forester possessed of large local experience. But the most certain way of ascertaining the exact age of a tree is to use Pressler's borer, which should be long enough to reach, or all but reach, the centre of the trunk. This instrument (*see* figure) is a gimlet, consisting of a tube (G) with a very sharp-cutting edge (E).

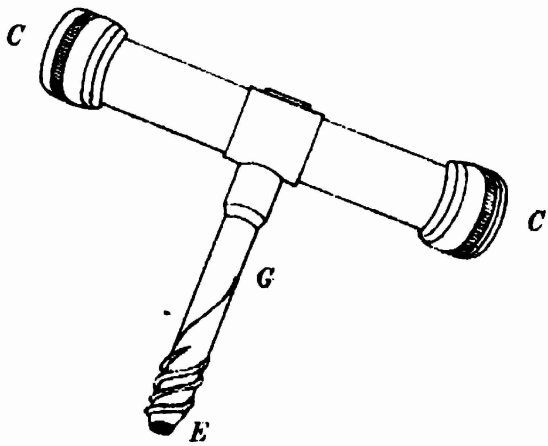

To render the instrument easily portable, the gimlet portion G can be taken off and put into the cylinder CC, which is hollow, and the caps of which unscrew off.

As the tube is forced into the trunk of a tree, a cylinder of wood is cut out by the tube. On withdrawing the gimlet, the cylinder of wood can be easily pushed out of the tube and the ring-markings on it counted. When the borer does not quite reach the centre of the tree, the age of the remaining portion of the trunk can be estimated with sufficient accuracy.

If the conditions of the forest have not materially altered since the appearance of the trees experimented upon, the ring-countings will give also the age of individuals of any diameter-class smaller than the class to which those trees belong.

BENGAL SECRETARIAT LIBRARY

2. *Determination of the age of felled trees.*

It is scarcely necessary to say that, under the assumption made at the beginning of this Chapter, the required age is accurately determined by counting the number of concentric rings on the section of the stool or trunk. The remark made in the last paragraph of the preceding article holds good here also.

3. *Determination of the age of entire crops.*

If the crop is regular, its age is practically the age of the middle class of stems composing it, and it will hence suffice to determine the age of one of those stems, or, to be on the safe side, of a few of them.

If the crop is irregular, the problem becomes more or less complicated. Several stems of the different diameter-classes present must be examined, and when the respective ages of the several classes have been determined, the question to resolve is how to obtain the mean age of the crop from them. To take the mere arithmetical mean of the several ages without reference to the respective areas occupied by them, or to the quantity of material each represents, would evidently be wrong. We now proceed to investigate different methods for obtaining the true mean age, which may be defined as that age at which a crop of uniform age would, under the same conditions of soil, locality, and species, have produced the same volume of material as the actual crop contains.

Let v_1, v_2, v_3 ..... = respectively the volumes of the several classes aged, respectively, y_1, y_2, y_3 ..... years, and Y = the required mean age = the age of the imaginary equivalent crop. By hypothesis the mean annual increment of both crops is one and the same; let this increment = I. Then—

$$IY = v_1 + v_2 + v_3 \ldots\ldots\ldots$$

$$\text{and } I = \frac{v_1}{y_1} + \frac{v_2}{y_2} + \frac{v_3}{y_3} \ldots\ldots\ldots ;$$

$$\text{Hence } \left(\frac{v_1}{y_1} + \frac{v_2}{y_2} + \frac{v_3}{y_3} \ldots\ldots\right) Y = v_1 + v_2 + v_3 \ldots\ldots$$

$$\text{and } Y = \frac{v_1 + v_2 + v_3 \ldots\ldots}{\frac{v_1}{y_1} + \frac{v_2}{y_2} + \frac{v_3}{y_3} \ldots\ldots} \ldots\ldots\ldots\ldots\ldots\ldots\ldots \text{Formula (v).}$$

Expressed in words, the preceding formula would run thus:—*To obtain the mean age of a crop composed of trees of diverse ages, divide the total volume of material on the ground by the sum of the mean annual increments of the several age-classes.*

Since the age of trees is, at least approximately, a function of

their diameters, the diameter-classes may be considered as coincident with age-classes, and the words "*diameter-classes*" may be substituted for "*age-classes*" in the above rule.

Let us now investigate another formula for the case in which the respective areas $a_1, a_2, a_3 \ldots\ldots$ occupied by the diameter-classes are known. If $x_1, x_2, x_3, \ldots\ldots =$ respectively the mean annual increment per unit of surface in the different areas $a_1, a_2, a_3 \ldots\ldots$, then we have

$$v_1 = a_1 x_1 y_1; \quad v_2 = a_2 x_2 y_2; \quad v_3 = a_3 x_3 y_3; \ldots\ldots\ldots;$$

$$\text{and } \frac{v_1}{y_1} = a_1 x_1; \quad \frac{v_2}{y_2} = a_2 x_2; \quad \frac{v_3}{y_3} = a_3 x_3; \ldots\ldots\ldots$$

Substituting these values of v and $\frac{v}{y}$ in Formula (v), we have

$$Y = \frac{a_1 y_1 x_2 + a_2 x_2 y_2 + a_3 x_3 y_3 \ldots\ldots}{a_1 x_1 + a_2 x_2 + a_3 x_3 \quad \ldots\ldots}$$

In the above formula, if $x_1 = x_2 = x_3 = \ldots\ldots$, a perfectly permissible assumption, we have

$$Y = \frac{a_1 y_1 + a_2 y_2 + a_3 y_3 \ldots\ldots}{a_1 + a_2 + a_3 \quad \ldots\ldots} \ldots\ldots \text{ Formula (vi).}$$

The employment of this formula presupposes a knowledge of the respective areas occupied by the different age-classes. It is, therefore, not adapted for the calculation of the mean age of a crop composed of trees of various intermixed ages, but its special use is for the determination of the mean age of several crops considered together, or even of an entire working circle, and it is generally employed for this purpose. It gives the same result as Formula (v) when Y is approximately the age at which the highest mean annual increment occurs.

It now remains to investigate a formula for finding out the mean age of the crop when we know only the numbers $n_1, n_2, n_3, \ldots\ldots$ of trees included respectively in the several classes whose ages are $y_1, y_2, y_3 \ldots\ldots$ By the ordinary rule of arithmetic for obtaining averages, we have the mean age of the crop

$$Y = \frac{n_1 y_1 + n_2 y_2 + n_3 y_3 \ldots\ldots}{n_1 + n_2 + n_3 \quad \ldots\ldots} \ldots\ldots\ldots \text{Formula (vii).}$$

If this formula is to yield the same result as Formula (v), it is necessary that the mean annual increment of all the diameter-classes should be one and the same. For let $\chi_1, \chi_2, \chi_3 \ldots\ldots =$ the mean annual increments of the average trees of the several classes, then

$$v_1 = \chi_1 y_1 n_1; \quad v_2 = \chi_2 y_2 n_2; \quad v_3 = \chi_3 y_3 n_3; \ldots\ldots\ldots$$

and by Formula (v)

$$Y = \frac{\chi_1 y_1 n_1 + \chi_2 y_2 n_2 + \chi_3 y_3 n_3 \ldots\ldots}{\chi_1 n_1 + \chi_2 n_2 + \chi_3 n_3},$$

Hence, in order that formula (vii) should at the same time be true, we must have

$$\chi_1 = \chi_2 = \chi_3 \cdots\cdots\cdots$$

For Formula (vii) to give the same result as Formula (vi), it is necessary that the number of trees per unit of area should be one and the same for all the age-classes. For let $\nu_1, \nu_2, \nu_3 \ldots\ldots$ be respectively these numbers for the several classes, then

$$n_1 = a_1\,\nu_1\,;\quad n_2 = a_2\,\nu_2\,;\quad n_3 = a_3\,\nu_3\,;\ \cdots\cdots\cdots.$$

and by Formula (vii)

$$Y = \frac{a_1\,\nu_1\,y_1 + a_2\,\nu_2\,y_2 + a_3\,\nu_3\,y_3 \ldots\ldots}{a_1\,\nu_1 + a_2\,\nu_2 + a_3\,\nu_3 \quad \ldots\ldots};$$

by Formula (vi)

$$Y \text{ also} = \frac{a_1\,y_1 + a_2\,y_2 + a_3\,y_3 \ldots\ldots}{a_1 + a_2 + a_3 \quad \ldots\ldots};$$

and we must hence have

$$\nu_1 = \nu_2 = \nu_3 = \cdots\cdots\cdots.$$

It has now been shown that Formula (vii) holds good only on condition (*a*) that the mean annual increment is one and the same for all the diameter-classes, and (*b*) that the number of trees per acre is one and the same at all ages, assumptions that are incompatible with actual facts. Hence the employment of this Formula should be avoided.

If in Formula (vii) we assume that $n_1 = n_2 = n_3 \ldots\ldots = n$; that is to say, that the number of stems in each age-class is the same, we have

$$Y = \frac{y_1 + y_2 + y_3 \ldots\ldots}{n}$$

= the arithmetical mean of the ages of the sample trees. Now, in Urich's method of valuation survey each sample tree corresponds to one and the same number of trees in the crop. Hence if, in working according to that method, we deduce the mean age of the crop by taking the mean of the ages of the sample trees, we obtain the same result as if we had adopted Formula (vii), which has just been shown to be incorrect.

Nevertheless, as by far the easiest way of determining the mean age of a crop is to take the simple arithmetical mean of the ages of the sample trees, let us examine under what conditions such a procedure would give correct results.

Let us then suppose that in this special case the mean age of the crop is equal to the arithmetical mean of the ages of the sample trees. Hence

$$\frac{y_1 + y_2 + y_3 \cdots y_n}{n} = Y = \frac{v_1 + v_2 + v_3 \cdots + v_n}{\frac{v_1}{y_1} + \frac{v_2}{y_2} + \frac{v_3}{y_3} \cdots + \frac{v_n}{y_n}} \text{ [by Formula (v)]}$$

Multiply both the numerator and denominator of the first side of the equation by such a number z that the numerators of both sides may be equal. Then the denominators will also be equal.

$$\text{Hence } z\,y_1 + z\,y_2 + z\,y_3 \ldots\ldots zy_n = v_1 + v_2 + v_3 \ldots\ldots + v_n,$$

$$\text{and} \quad z + z + z \text{ up to } n \text{ terms} = \frac{v_1}{y_1} + \frac{v_2}{y_2} + \frac{v_3}{y_3} \ldots\ldots + \frac{v_n}{y_n}.$$

These two equalities are possible only on the condition that the first, second, third ... terms of one side are equal respectively to the first, second, third ... terms of the other side, that is to say,

$$z\,y_1 = v_1;\ z\,y_2 = v_2;\ z\,y_3 = v_3;\ \ldots\ldots z\,y_n = v_n;$$

$$\text{and} \quad z = \frac{v_1}{y_1} = \frac{v_2}{y_2} = \frac{v_3}{y_3} \ldots\ldots = \frac{v_n}{y_n};$$

But volume (v) = basal area × height × form-factor = $a\,h\,f$,

$$\therefore \frac{a_1\,h_1 f_1}{y_1} = \frac{a_2\,h_2 f_2}{y_2} = \frac{a_3\,h_3 f_3}{y_3} \ldots\ldots\ldots$$

Now we may assume that in one and the same crop the mean annual increment of height × form-factor (*viz.*, $\frac{h\,f}{y}$) is approximately equal, that is that

$$\frac{h_1 f_1}{a_1} = \frac{h_2 f_2}{a_2} = \frac{h_3 f_3}{a_3} = \ldots\ldots\ldots$$

$$\text{Hence} \quad a_1 = a_2 = a_3 \ldots\ldots\ldots$$

These conditions are fulfilled by the distribution of the sample trees in Hartig's method of valuation, so that in that method the mean of the ages of the sample trees gives the mean age of the crop.

For the employment of Formula (v) a survey by diameter-classes is necessary in order to be able to determine the volume of material contained in the several classes. This is not possible by Urich's method.

It may some times occur, when only a few sample trees are felled, that the smaller are found to be older than others of larger diameter. In such a case we may still take the arithmetical mean of the ages on the not improbable assumption that there is a wide difference of ages between the several individuals of each of the diameter-classes, and that for one sample tree that gives too high a figure for the mean age of its class, there is another which gives the same amount of compensating error on the other side—errors of excess and defect thus cancelling each other. The smaller the difference between the ages of the oldest and youngest trees in one and the same diameter-class is, the more approximate to the true mean age of the crop will be the arithmetical mean of the ages of the sample trees. And the result will be all the nearer, the larger the number of sample trees taken is, and the more closely the system of forming the stem-classes approaches that of Hartig's method.

A FORESTER'S LIFE IS NOT A HAPPY ONE.

During this last hot weather I have taken the daily maximum temperatures from curiosity. They are sufficiently astonishing, and are, I think, significant in connection with the hardships Forest Officers undergo and their recompense when broken down. My Division is, I imagine, a fair average one for the ten plains' Divisions of these Provinces. Some of us can get a good climate in the rains to rebuild our shattered constitutions, but only some of us. The readings began on May 1st and ceased on June 9th in consequence of the rains coming on. Five days were omitted by accident, of which four were ordinary hot days and one was cool.

Mean maximum diurnal temperatures.

28 days in a closed house,	... ...	98°
20 „ „ verandah, ...	... ...	106°
6 „ with house doors open in consequence of rainy weather,	...	91·5°

The highest reading in a closed house was 103° and in a verandah 110.

Q.

PASTEUR'S METHOD OF INOCULATION FOR ANTHRAX.

Pasteur's system of vaccination for cattle, sheep and other animals, though not established in the same firm manner as Jenner's vaccination for human small-pox, has, it may safely be said, passed its initial stages, and is beginning to find general acceptance in the countries of the continent of Europe.

A few years ago, a terrible epidemic known as charbon, probably so called from the black colour of the blood in the veins and organs of the dead animal, most alarmingly increased the mortality of agricultural animals, and consequently created a great panic among European farmers. Pasteur now came forward as the great deliverer. He had already been carrying on chemical and other experiments in his modest laboratory at Paris, and was at the time of the epidemic busy with the "theory of fermentation." Doing away with the old doctrine of spontaneous generation, he was firmly convinced in his own mind that the origin of all contagious diseases could be traced to some minute microscopic germ. With this idea in his mind, he set to work to grapple with the malady that was devastating Europe. He took the blood of some of the animals dead of *charbon* and examined it under the microscope. In the field of view of his instrument he observed little rods or

"*bâtons*" interspersed all over in the midst of the blood corpuscles. Such rods had already been discovered by bacteriologists before his time, but no one had yet taken up their study in a special manner. Davaine was the first to discover stiff rod-like filaments in the blood of animals dead of *charbon*, but the matter ended there, and nothing more was done until such giants in the world of bacteriological science as Koch and Cohn, Klein and Bravell, began their labours and shed light on the subject from every side; but it will now be probably admitted by every one that to Pasteur, and to Pasteur alone, must be given the glory and honour of revealing all that is known of the terrible malady which, more familiar to English-speaking people as anthrax or 'splenic apoplexy' or malignant pustule, not only does its work of destruction among the lower animals, but proves itself to be no discerner of created beings, and in its work of ruthless destruction spares not even man.

The disease does not confine itself within the narrow limits of a district, but prevails over the greater part of the continent of Europe, reaches across Siberia, is dreaded even in the west of South America, has been a scourge in Egypt ever since the times of the impenitent Pharaoh and the Patriarch Moses, and, to come nearer home, is rife over different parts of India, proving the veriest plague in the north, in the districts of the Punjab. Pasteur's system of eradicating the disease must hence commend itself to all practical and scientific men in India; and it is the aim of this article to put before all interested in the matter, in language free from all technicalities and in as brief a way as is consistent with a sufficiently clear understanding of the subject, all those points in his system which lead up to the prevention of the disease by a method which really is a repetition, in a modified way, of vaccination for *small-pox*. The whole system is dependent on the injection of attenuated virus or "*vaccine*" into the animal, which, in short, is the fundamental principle of vaccination.

Before accepting this principle, it must, of course, first of all be proved that animals are really susceptible to the virus itself, and that healthy animals take the disease through spores and germs when inoculated with the virulent virus. This fact has been demonstrated over and over again in Pasteur's laboratory by actual experiments. It may be interesting here to give a description of one of these, which was performed in the writer's presence. A healthy rabbit was inoculated by the laboratory assistant with the virulent virus of anthrax obtained from the blood of an animal previously dead of the disease. The rabbit was found dead after an interval of 30 hours with all the symptoms of anthrax. This

same animal was next dissected, and the blood being taken in a state of purity from its heart, *i.e.*, free from all foreign organisms was examined under the microscope. In the field of view of the instrument were presented numerous characteristic *bacilli Anthracis* in the shape of little rods (bâtons). This clearly proved that this particular animal, previously quite healthy, took the mortal disease from the virulent virus injected under its skin by the laboratory assistant. Now, as has been said above, large numbers of such experiments ought to be made on different kinds of animals (and as a matter of fact they have been made) before it can be laid down that an animal can be given the deadly disease by the injection of virus into its system. In Pasteur's laboratory this is now regarded as an established fact. This same virulent virus is next cultivated, in an attenuated form, in sterilized broth, and is then known as vaccine. The method by which this is done still remains the monopoly of Pasteur's laboratory. The vaccine on being injected into the animal system produces only a slight fever and but a mild form of the disease, which in its turn acts as a preservative against the deadly spontaneous malady.

Science has not yet discovered how it does this, or what is the real change produced in the animal organism. Whether the change is chemical or physiological is not positively known yet. A common illustration, however, may serve to afford a partial explanation. In the case of a man who has given himself up to drink or opium, it is found that his system in course of time can endure much larger doses than a constitution which has not been injected with a single drop of alcohol, or the minutest quantity of opium. *The bacillus Anthracis* is a microscopic organism, but, like all higher organisms, it requires food (*i.e.*, a medium) in which it can develop. This food is found in the blood. When the mild virus or vaccine is injected, the constituents of the blood which form the nutrient medium are all exhausted, most probably by the vaccine, and it becomes very clear, therefore, that, when subsequently the virulent virus is injected artificially or comes naturally to an animal, it finds all its food constituents exhausted. It has nothing to live on. It must, therefore, die for want of food.

Having given, as well as can be done, an idea of the way in which vaccine preserves against virus, it becomes now necessary to show the details of manipulation by which the vaccine may be cultivated in the laboratory. The nutrient media for the artificial development of the *bacillus Anthracis*, as employed in Pasteur's laboratory, are *sterilized chicken and veal broths*. This is the soil, so to speak, in which the seed of the bacillus is cultivated. By sterilized broth

is meant broth which has been prepared in such a way that it is free from all organisms. These broths are made at the Paris laboratory, and are then sent out to different parts of the world in sealed *ballons* or globes, of a capacity of about 225 cc, containing doses sufficient for quite 1,500 sheep. These sealed *ballons* are rasped at the neck with a steel knife. A Berzelius carbon pencil is taken and heated in a Bunsen or spirit lamp flame, and placed on the deep scratch made by the knife, and the neck of the *ballon* is thus cracked open. Large and small flasks are now got ready, being, like all other empty vessels that are used in the manipulation, first thoroughly sterilized. This is done in the following way. The vessels are plugged with clean cotton wool. They are then placed within a large stove, which is heated to a temperature of from 160 to 200 deg. C. They are kept there for about 8 or 10 minutes. The lid of the stove is then taken off and the cotton wool examined. When of a brownish hue, the vessels may be safely taken out as thoroughly sterilized.

To return to the broth. In addition to the large and small flasks, one or two *ballon* pipettes, similarly sterilized, are also got ready for use. By means of the *ballon* pipette, the tip of which is cut off with a steel knife, the broth is sucked up and then introduced into the flasks, the contents of one *ballon* sufficing for two large or eight small flasks. The *ballon* pipette, still holding a few drops of the broth, is sealed and ticketed with the name of the broth and the date. The flasks and the pipette are now left in a dark and hot place for ten days to prove their sterility. The temperature of the room in which they are placed should be from 30 to 35 deg. C. This is the temperature suitable for the cultivation of the anthrax bacillus, as well as for the cultivation of other microscopic organisms. Should, therefore, any foreign organisms have found their way into the flasks, they would develop and show themselves within the ten days. If, on the other hand, from daily examination it be found, even at the end of the tenth day, that the contents still remain perfectly clear and limpid, they may be safely used for supplying the medium in which the seed is to be sown. Instead of a hot chamber, as at the Pasteur laboratory, stoves or incubators can be used, in which the temperature can be kept within the necessary range.

Having obtained thoroughly sterilized broth, the next thing to be attended to is the *seed* that is to be sown in the broth. This *seed* also is prepared at the Paris laboratory, and sent out with the broth in a liquid condition in fine sealed glass tubes. A temperature below 15 deg. C. is requisite to preserve the efficacy of the liquid, and care, therefore, has to be taken to preserve the seed in its

proper condition. It may be mentioned here, that there are three varieties of this original seed, *viz.*:—

(1). The seed which is to furnish the *première* or weakest form of vaccine.

(2). That which is to give the *deuxième* or second vaccine, which is not so attenuated as the *première.*

(3). That which is to be used as *virulent virus.*

The tube containing the seed has both ends sealed. The shorter and broader end is cut off with a steel knife, and the contents being sucked up by a sterilized fine tube plugged with cotton are introduced in equal parts into flasks containing the sterilized chicken broth. These flasks now constitute what are called *seed flasks.* They are kept in the Pasteur stove for three days at a temperature varying from 30 to 35 deg. C. Should no alterations have taken place at the end of three days due to foreign organisms, the liquid of these seed flasks is introduced into the flasks containing the sterilized veal broth.

The contents of the *première* seed flask are sucked up by a fine sterilized tube, and a few drops introduced into each of the flasks containing the veal broth. These latter flasks also are put into the incubator or Pasteur stove. Some of them are kept in the stove for three days, forming what is known as the *new vaccine,* and others only for 10 days, constituting the *old* or *ancienne vaccine.* Development of the bacillus rapidly goes on at the temperature of the stove. Both filaments and spores begin to form, the *new vaccine* containing more filaments than spores, and the *old vaccine* being composed almost solely of spores. A mixture is made of the *new and old vaccines* in specially prepared *vaccine tubes,* which are plugged with India rubber stoppers, and then despatched to veterinarians and farmers for immediate use. The growth in the broth has the appearance of small fluffy masses deposited at the bottom of the flask, often radiating out if the flask be slightly tilted, quite different in appearance from the alterations which so often take place owing to the unavoidable ingress of foreign organisms during manipulation. Should any doubt whatever exist about the true nature of the growth, the contents of the doubtful flask should be at once well examined. The three different states in which the anthrax bacilli occur are—

(1). *Bâtons* or short rods.—Some times a few are joined together into short *leptothrices.* They are found in the blood.

(2). *Filaments.*—These are found only in culture, whether virulent or attenuated as vaccine. They give to the liquid a turbid appearance, and, as has been just mentioned

above, are found subsequently in fluffy flocculent masses at the bottom of the flask.

(3). *Spores.*—These are never found inside the living animals, but form freely after a certain period of vegetation in contact with a large amount of oxygen.

These conditions should be carefully distinguished from the alterations which take place in the broth, the most frequent of which are—

(1). *The Bacillus subtilis*, or Hay Bacillus, forming a film on the surface of the liquid, having rather a serpentine appearance under the microscope.

(2). *Point double.* The appearance to the naked eye is that of a circular deposit like a rim at the bottom of the flask. Even when the flask is untouched, the liquid has a turbid, troubled appearance.

(3). *The Moulds*, which begin as small white flocculent spots, but which after a time become large flocculent masses floating in the liquid. The most common of these are—

(a). The *Aspergilius.*

(b). The *Penicilium glaucum.*

The *deuxième* vaccine is prepared precisely in the same way as the *première.* A mixture is made of new and old *deuxième* vaccine and sent out in identical vaccine tubes to veterinarians about 12 days after the *première* mixture. Animals are first inoculated with the *première* mixture, and 12 to 15 days after with the *deuxième* mixture. They are then considered safe against disease. For experimental purposes, a small number of animals may be inoculated at the laboratory with the virulent virus 15 days after the *deuxième.* Should the animal now not succumb, it may be safely concluded that *vaccination* with the *première* and *deuxième mixtures* has been a successful preservative against the effects of the injection of virulent virus, and therefore much more so against the spontaneous malady, which is the result of the same virus.

Two preserving inoculations are made in order that the single inoculation may not prove so strong as to impart the disease in a fatal form. The first vaccine with extremely attenuated bacilli causes in the animal only a slight fever. The second vaccine with slightly more virulent bacilli, which is injected fifteen days later, would kill a certain number of animals, if they were not already partly preserved by the preceding inoculation. On account of this partial preservation, the animals in the second case experience but a slight fever. There are many instances, however, in which *œdemas* or slight swellings appear at the point of inoculation. If there

is any *œdema* after the first vaccine, the reason is because the vaccine was too strong. If, on the other hand, the *œdema* appears at the point of inoculation after the second vaccine, the reason is that the first was too weak, or the second too strong. If, lastly, the *virulent virus* kills vaccinated animals, it is because the vaccine used in the inoculations was too weak.

Before closing a description of the details by which the vaccine may be cultivated, it might be well to give a few additional hints which may be useful for the practical student. It must be remembered that liquids are handled in the cultivation of the bacilli which can not be allowed to drop and lie on the floor with impunity. A drop or two of liquid will fall out in spite of the most careful manipulation. If it is only vaccine, care must be taken to pour *copper sulphate solution* over it. The solution should be of the strength of 10 grammes of copper sulphate to 1,000 cc. of water. Should, however, some strong vaccine or virulent virus drop accidentally on the table or floor, it should be immediately burnt with a Bunsen flame, as the *bacillus Anthracis* is killed by a temperature higher than 100° C. The rods or bâtons resist a temperature not exceeding 95° C., and resist too the action of alcohol. *The filaments*, on the other hand, are killed by alcohol and by a temperature of 60° C. The temperature most favourable to the rapid development of the bacilli filaments and to the formation of spores is from 30° to 35° C. At 45° C. they are no longer cultivated, neither are they cultivated below 16° C. Further, every flask or vessel or instrument which has come into contact with virulent virus or with the blood of an animal dead of anthrax should be thoroughly boiled in water. Microscopic slides and cover glasses may be washed in the following way :—Immediately after use they should be thrown into a dish containing copper sulphate solution, and then boiled in water, and subsequently washed in water containing potash or hydrochloric acid. Too much attention cannot be given to the care with which every detail of manipulation should be carried out, for the smallest drop of virus or poisonous blood might, if it entered a prick, scratch or wound in the finger, cause death in 10 to 12 hours.

In case of accidents, the following remedies may be used :—

(1). Essence of terebenthene.
(2). Thymic acid.
(3). Phenic acid.
(4). Copper sulphate solution.

But perhaps the best plan to follow is to cauterise the wound immediately.

We will now go on to a description of the apparatus needed. The uniform temperature of 30 to 35° C., for the development of the bacillus, may be obtained in the Pasteur stove, which thus serves the purpose of an incubator. It consists of a glass case supported on four wooden legs containing two folding doors to exclude air as much as possible. There are several shelves in the glass case for holding the flasks, and above them are two ventilators, to be opened whenever the temperature within is too high. The frame-work itself consists, so to speak, of two boxes, one inside the other, with wood-shavings between to confine the heat within the stove. Communicating with the frame-work is a boiler which is heated by a gas-burner below. When heated, the steam rises and passes through a spiral in the body of the frame-work into a refrigerator containing another spiral. In the refrigerator, which contains cold water, the steam is re-converted into water, and by a pipe returns to the boiler. Thus the same water is used over and over again. By evaporation through joints there is always a slight loss, which is compensated for by the addition of water to the boiler through a funnel when the glass tube showing the level of water in the boiler shows too low a level. A second glass tube attached to the refrigerator shows the level of the water within it. Further, the refrigerator has two pipes serving as inlet and outlet. In contact with the spiral containing steam there is a second spiral filled with distilled water. This distilled water expands from the heat of the steam in immediate contact with it. The result is that it rises into a glass tube attached to an important part of the stove called the regulator. The steam rising up in the tube presses up against a flexible rubber plate inside the regulator, thus making it bulge out, whereby the quantity of gas passing from the main into the burner of the boiler (the gas enters in contact with the plate) is diminished. As a result of this, the boiler is less heated, the steam is not so hot now, the distilled water does not expand, there is no pressure on the rubber plate, which thereupon ceases to bulge out, and the entry of gas into the boiler is thus again unimpeded. In this manner, as often as the flame becomes too intense, it is automatically checked, and a sufficiently constant temperature is thus maintained in the stove. The stove has to be kept in darkness, for the luminous rays of the sun have, strange to say, a very great effect on the spores of the bacilli, although they resist so many other agents.

M. Arloing has proved that the spores of the *bacillus Anthracis* contained in a broth of culture exposed to the sun are completely destroyed. The mycelia of fungi vegetation, however, require to be

The healthy blood showing the blood corpuscles.

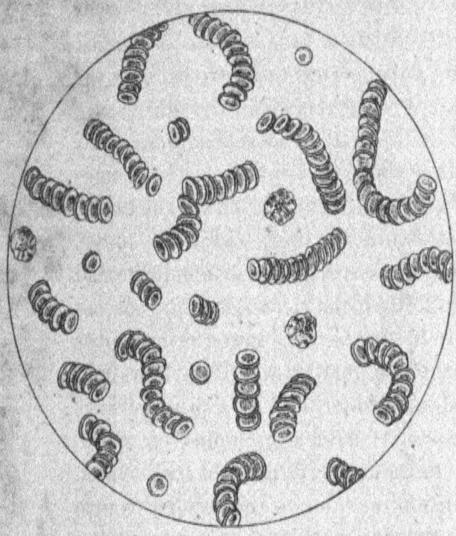

Blood of animals dead of anthrax.

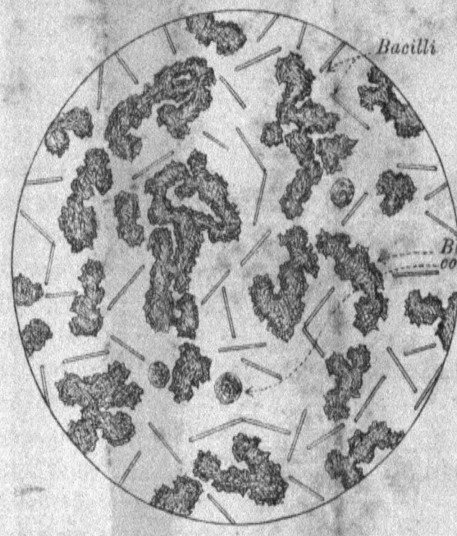

Bacteria of culture.

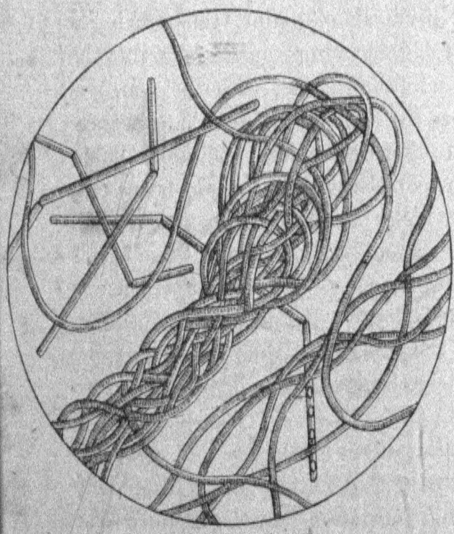

Bacteria

(Showing spores and filaments).

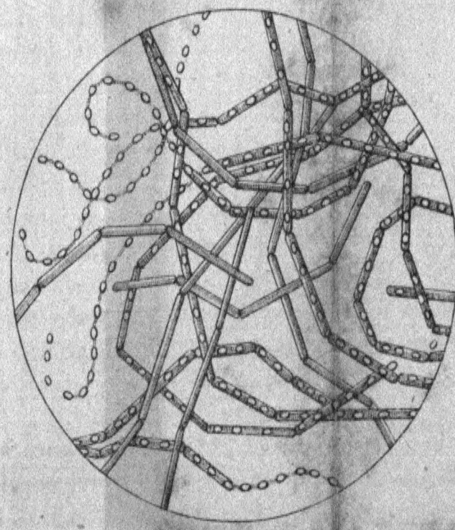

Litho. T. C. Press, Rourkes.
No. 505

exposed to the sun for a much longer time before it is completely destroyed. MM. Nocard and Duclaux of Paris have formulated the hypothesis that the action of the "solar rays had much more effect upon the culture than upon the spores themselves." In order to prove this, M. Strauss placed some spores in pure distilled water, and in that condition he found that they resisted the effect of the sun for four hours, whilst they were destroyed after two hours when put inside some broth. M. Duclaux has made some further experiments with the same object, and he has ascertained "that an exposure to the sun for two hours has been sufficient to destroy young spores, though it has not been so for spores two to three years old." Spores of the *bacillus Anthracis*, even two or three months old, are considered young spores, and care should always, therefore, be taken in the laboratory to protect them in their cultures as far as possible from the luminous rays of the sun. Light must be excluded, and this may in practice be most easily done by covering the door of the stove with a piece of black cloth. The room may be also left dark when not used.

In conclusion, the reader must be reminded that out-door work in connexion with the disease has not been touched upon, and that all the remarks in the present article are confined to what is done in the laboratory for the cultivation of the protective vaccine.

CULTIVATION OF GRAPES IN THE DEHRA DUN.

I HAVE been growing grapes in Dehra with great success for the past six years. People generally say that grapes do not thrive in the Dún, but I do not see why, with a little care and attention, they cannot be grown to perfection. By perfection, I do not, of course, mean to say that they will compete with the European or the Kabul varieties, although in many respects they will be quite as good.

What we require in the Dún is a grape that ripens before the heavy rains set in, that is, before the 1st July. From experience I have found the White Champion grape the best; it ripens early, and is quite as sweet as the Kabul varieties. It has, however, shown one drawback, *viz.*, that it does not bear very profusely; but this is perhaps owing to its having been kept back in my garden by another more vigorous variety (the Black Austraite), which is growing alongside of it. I have now planted out two of the White Champion variety separately from the other, and will note the difference of result, if any.

In selecting the varieties to cultivate, we must be careful that we obtain a good sweet kind. Having got such a variety, it must be grown under cover on pretty high, well-drained ground, with a southerly, south-easterly, or south-westerly aspect. A house verandah is very good, but the vines cannot in that case be treated properly, because the proper manures cannot then be used.

In January 1883 I planted four vines of the following varieties:—White Champion, Black Austraite, and Early Hamburg. They were put into a trench in front of the verandah of a cottage facing south. The trench was 4 feet deep and 2 feet wide, and was filled with pounded bones to a depth of 1 foot. Over this was put in good goat and sheep manure, and the rest of the trench was then filled up with dark, loose soil. The vines commenced bearing after three years. In the first year they fruited, I got about 40 lbs. off three vines. The White Champion did not bear till the fourth year. The grapes were not very sweet at first, but were, at any rate, better than any to be had elsewhere in the Dún. Since then I have been getting two maunds every year. The grapes are protected from rain by training them in the verandah on wire-netting about 6 feet in height.

The following is the treatment to which the vines have been subjected. The roots are bared to a depth of 1½ feet by digging a semi-circular trench of about 4 to 5 feet in diameter in December, and they are thus left more or less exposed for one month, after all the superfluous dense masses of thin roots have been cut out, and only about seven or eight main roots left. Next, the vines are carefully pruned, all sickly and lanky shoots being completely removed, and the healthy ones reduced to about four or five buds.

In January I make a mixture of equal parts of poultry-yard, cowdung, and sheep and goat manures, with a very small quantity of table salt and sulphate of iron (*heera kasis*) added. A layer of this mixture, about 6 inches thick, is first put into the pit, then a sprinkling of slaked lime, and over this 3 inches of soil. Another series of the same three layers is put over this, and then the pit is filled up.

In April the vines begin to flower. About fifteen days before this occurs, the sap oozes out from the pruned surfaces. Last March I collected a whole tumbler full of water from a single stem in a single night. The outflow of sap ceases as soon as the buds begin coming out. With the flower buds a dense mass of leaves makes its appearance.

These leaves should be carefully picked out, so as to admit sufficient light and heat for the fruit to form. From each inflorescence,

two, and some times even three, bunches of fruit develop. The extremities of the shoots bearing the inflorescences should be broken off when the grapes have about reached the size of peas. This is done in order to prevent the shoot from developing too luxuriantly and then appropriating for itself a great part of the nourishment that should go to form good fruit. I brought two vines from Biluchistan, but these plants do not thrive at all, and have never yet borne fruit. They die down every winter, to shoot up afresh in the rains to about 4 feet in height, but never more.

W. A. HEARSEY.

IMPERIAL FOREST SCHOOL,
DEHRA DUN,
27th July, 1889.

LORD CONNEMARA ON FOREST LAWS.—During the late visit of the Governor of Madras to Cuddalore, a Municipal address was presented to him. The following is his reply in connection with the operation of the Forest Laws :—"I always say to the Forest officers and to Collectors with whom the Forest officers work, that laws have to be worked with very great care and with very great consideration for the people. I am sure you must know that the object that the Government have in view is to restore to the forest their ancient condition, and to make the forests what they were many years ago. We do that in the interests of the people themselves. That cannot be done without preventing goats, cattle and other animals from grazing in those forests, and again only a comparatively small portion of this district has been taken up for forests; and there will in perpetuity be a very large proportion of the forests lands, where people will be able to graze their cattle without paying anything at all, and where they will be able to gather their faggots, wild berries and wild shrubs. It is only in reserved forests that a very small portion which is absolutely necessary is preserved from depredations of all kinds. I have had the advantage of speaking to the Forest officer this morning on the subject, and am glad to learn that forests in this district seem to be in a very fair way to improvement. I hope most sincerely that in a very few years they will be in such a condition that people will be able to get firewood from them, and to use them in such a way as to be a boon and a benefit to them. Certainly nothing can be more barbarous than leaving our forests to take care of themselves, and I have no doubt that in a few years the forest will be an advantage to the people themselves."—*Madras Mail.*

II. Timber Market.

STATEMENT OF AVERAGE SELLING RATES FOR THE QUARTER ENDING 30TH JUNE, 1889.

At Meerut.

	RS. A. P.		RS. A. P.
Sál 10′ tors (poles), per score, from	10 0 0	to	20 0 0
Sál karis, 12′×5″×4″ „ „	25 0 0	„	40 0 0
Sál bed-posts, 7′×2½″×2½″ „ „	7 8 0	„	12 10 0
Bamboos of 9′ to 10′ per 100 score, „	25 0 0	„	80 0 0

At Cawnpore.

Sál 10′ tors (poles), per score, from	6 8 0	to	7 0 0
Sain karis, 12′×5″×4″ „ „	12 0 0	„	14 0 0
Sál bed-posts, 7′×2½″×2½″ „ „	5 0 0	„	5 8 0
Bamboos of 9′ to 10′, per 100 score, „	35 0 0	„	55 0 0

At Bulandshahr.

Sál 10′ tors (poles), per score, from	0 0 0	to	0 0 0
Sál and sain, &c., karis, 12′ × 5″ × 4″, „ „	0 0 0	„	0 0 0
Sál bed-posts, 7′×2½″×2½″ „ „	0 0 0	„	0 0 0
Bamboos of 9′ to 10′, per 100 score, „	60 0 0	„	65 0 0

At Pilibhit.

Sál 10′ tors (poles), per score, from	40 0 0	to	70 0 0
Sál karis, 12′×5″×4″, „ „	30 0 0	„	40 0 0
Sál bed-posts, 7′×2½″×2½″ „ „	5 0 0	„	6 4 0
Bamboos of 9′ to 10′, per 100 score, „	60 0 0	„	100 0 0

C. Bagshawe,

Conservator of Forests,

Central Circle, N.-W. P. and Oudh.

NOTES, QUERIES AND EXTRACTS.

THE INFLUENCE OF FORESTS ON WATER-SUPPLY.—Does cultivation and protection of forests cause an increase in rainfall? The reply of Mr. Henry Gannett, as published in *Science*, does not tend to confirm the generally admitted opinion on this question; whilst the statistics collected by this scientist have the more value, in that they refer to extended tracts in which the conditions of the country and the climate, both before and after changes in cultural treatment, are perfectly well known.

His observations extend over—

I.—An area of prairie lands in the state of Iowa in the north of Missouri, in the south of Minnesota, Illinois, and partly in Indiana. This area, measuring about 163,000 square miles, was formerly entirely covered with grass, but during the last 30 years large portions of it have been afforested.

II.—The state of Ohio with an area of about 58,000 square miles, formerly entirely covered with forests, of which at the present not one-tenth exists.

III.—An area of about 18,400 square miles situated in Massachussetts, Rhode Island, and Connecticut, which was densely wooded before its colonisation by Europeans. After the almost total destruction of these forests, about one-half of the area has, since 1860, been re-afforested.

If the removal of forests produces a decrease, and afforestation an increase, in the rainfall, the result of observations extending over a long series of years should show in the first instance an increase in the rainfall, in the second a decrease, and in the third a decrease up to 1860, and an increase after that date.

But the statistics collected by Mr. Gannett show that in these prairie lands an increase in the area under forest has not only not been followed by an increase in rainfall, but by an appreciable decrease. In the second instance, that of Ohio, a decrease in rainfall has indeed been proved, but this decrease isso insignificant that it cannot be seriously advanced as a conclusive proof of the unfavorable effect of disafforestation. The results of statistics

collected in the third instance, that of Massachussetts, also do not tend to confirm in any way the generally accepted theory, for up to 1860 it is shown that there was an evident increase in the rainfall over this area, reaching a maximum of 2·8 inches annually.

Mr. Gannett also investigated the question as to whether the cultivation of land denuded of forest growth resulted in influencing the rainfall; but the result of these investigations proved that no increase or decrease had occurred.

In writing generally on the causes of atmospheric phenomena, we have replied to the often put question which forms the title of this article long before Mr. Gannett wrote on the subject. In this periodical some six years ago we said "that forests do not produce rain, but that they play the important part of storing it up."

As far as concerns Algeria, we have arranged the observations registered at various meteorological stations in the provinces of Oran and Constantine, and these observations, extending over a period of 25 years, refer to large areas covered with forest adjacent to others, which are entirely free from forest growth; and whilst the areas are not to be compared with those reported on by Mr. Gannett, yet the results of the observations are very conclusive.

The region where the rainfall observations have most interest for the forester is bounded on the north, between Bougri and Lalalle, by the Mediterranean, on the east and west by the valleys of Summam and Sezbouse, and on the south by the high plateaux forming the water-shed between the sea coast and the desert of Sahara. This tract is in area about 47,000 square miles; and though no regular re-afforestation works are being carried out, yet the closure of large extents of forest and pasture land against the destructive action of the natives may almost be regarded as having a similar effect.

In spite, however, of these protective measures, many thousands of acres have from 1850 to 1875 been burnt over, and it is especially in these burnt areas, when compared with others successfully protected, that the rainfall statistics have the greatest significance.

These statistics show the following results :—

I.—That nearly the same amount of rain fell annually before and after removal of forest growth, and before and after re-aforestation.

II.—That totally different effects are produced by the annual rainfall before and after removal of forest growth, and before and after re-aforestation.

During the summer following the removal of forest growth, the spring level begins to fall, and the following year most of the springs dry up.

In consequence, the water-courses cease to be permanent and become intermittent, being transformed, during actual rainfall, into impetuous torrents, which cease to flow during dry weather.

The valley of Oned-Guebli to the north of the province of Constantine furnishes a remarkable instance of this.

This immense valley is divided into two portions by the river of the same name, and the western side includes the densest forests of this region, whilst the eastern is almost entirely denuded.

During eight years of topographical research in these mountains, we have invariably remarked that during the winter, when heavy rain falls persistently, often for weeks at a time, the floods in the water-courses from the western or wooded side, rise slowly, and rarely overflow the banks, and even after tropical rain-storms, which are frequent, the water remains clear.

On the eastern or denuded side, however, this is not the case. Scarcely has the rain commenced when each small ravine becomes a torrent, which rolls down gravel, boulders, and rocks, and overwhelms the neighbouring fields ; whilst the muddy water passes rapidly on, arrested by no vegetation, conferring no benefit on the country it traverses,—to leave behind, on the cessation of rain, nothing but dry and rocky ravines.

There is, however, no need to expatiate on the disastrous action of rain in mountainous and unwooded countries, it being too well known.

At the same time, well-informed people have frequently an exaggerated idea of the value of mountain forests, attributing to them other virtues than those which they possess. The virtues they do possess are the power of storing up the rainfall, and thereby regulating the flow of water-courses and springs, and they are entitled to respect.

Our rainfall observations are extremely interesting in reference to forests which have been destroyed by fire : in such forests, the annual rainfall remaining unchanged, the springs dry up and the water-courses become dry ravines.

We need not be content with contemporaneous evidence ; we can also bring valuable witness from the past to the truth of our assertions. About 10 miles to the west of the road from Constantine to Batna there is a horse-shoe shaped mountain range, with its convex towards the east. This range is named Djebel Anouda by the natives of the country. The inner slopes of this

horse-shoe were formerly thickly wooded, a fact proved by the presence of stumps of oak trees. These stumps, deeply charred and rooted in soil thoroughly baked by the fire which destroyed the trees themselves, have hitherto resisted the decomposing effects of time. An enumeration of the stumps shows a former growth of about 60 large trees per acre, and in the centre of this magnificent forest there are the remains, in hewn stone, of a gigantic tank, and issuing therefrom a broad aqueduct, traceable in its ruins for several miles. To-day the soil of Djebel Anouda is one of the most arid in Algeria; in former days a strong spring existed, its water-supply stored and protected by a sturdy forest growth.

In concluding this short paper, we would like to add that though the extent of the areas under our notice cannot compare with those observed by Mr. Gannett, on the other hand our rainfall stations are much closer to each other than those under Mr. Gannett's registration. Of 44 such stations erected by the Government of Algeria, the four which enclose the tract of Oned-Guebli have been most useful to us. It is this tract of country that the observations above recorded refer to, and these observations lead us to the conclusion that "the salutary influence of forests in storing atmospheric humidity is irrefutable; but to enable them to store this humidity, the atmosphere must first contain it."—L. PARQUET, in *Revue des Eaux Forêts.*

THE SUBORDINATE SERVICE IN THE BOMBAY FOREST DEPARTMENT.—Proposals for placing the interior economy of the Forest Department upon a more satisfactory basis have lately been engaging the attention of Government. It is generally admitted by the superior officers of that department that laxity, neglect of duty, and even fraud exist to a considerable extent among their subordinates. The cause of this blemish in the Forest Administration is stated to be due to inadequate supervision. European officers cannot be ubiquitous; and while other departments, recognising this fact, have met the difficulty by obtaining effective supervision and good work from well-paid natives, the departmental officers of this particular branch of the service have not accepted the results of experience gained elsewhere, and have hesitated to repose due confidence in indigenous officials. To render native or any subordinates worthy of the confidence of their superiors, they must be adequately paid. Most departments have "gazetted" appointments with a salary of Rs. 250 or Rs. 300 a month, and a corresponding position, but the gazetted Sub-Assistants in the Forest Department are paid much

less than first grade Mamlatdars or Inspectors of Police. The means under consideration for the improvement of their officers' position embrace savings on reduction of one Deputy Conservator and an increase of six Sub-Assistant Conservators, *i.e.*, of gazetted appointments open to the subordinate branch of the establishment. In this way a better class of candidates will be attracted to the department. The position of the important Ranger Class will at the same time be improved, and their salaries will be increased to Rs. 150. The Forest Class at the Poona College of Science for the education of higher officers will be thrown open to candidates for this class, who have passed an educational and physical test, and a number of appointments guaranteed to them on their completing the special Forest Class. Foresters will be encouraged to fit themselves at that college for promotion to Rangers. Another feature of the proposed reforms is to insist upon a closer co-operation between the Forest and other departments. Assistant Collectors and other supervising District officers will see that the Forest Department officers below a certain rank are attending to their duties. This is an excellent move, for the various departments have a strange way of ignoring each other's existence. The exercise of ordinary common sense will be sufficient to prevent any friction that might ensue on the new system. Altogether, the proposed reforms appear as sound as they were necessary. They will probably involve some financial loss at first, but Government is to be congratulated on their prudence in placing greater importance upon future solid benefits than upon avoiding a comparatively small temporary outlay.—*Bombay Gazette.*

"REH."—It appears that the alkaline salt "reh" is very far from being confined to canal-irrigated districts. There are at least two parganas in the Ghazipur District, Parganas Bahariabad and Cawnpore, where large areas have been partly thrown out of cultivation on account of these salts, and now grow only rain crops of rice. As no canal has ever run through this tract, it is obvious that reh must be due to causes unconnected with canal water. But here again there is a suspicion of water-logging, the water level being only 8 to 10 feet from the surface in the worst parts. Mr. Cockburn's theory, lately announced in these columns, is that reh is essentially produced by the solution of kankar, which subsequently combines with salt to form caustic soda. Wherever this kankar (irrespective of canals) has been exposed on the surface of the soil in abnormal quantities, it is acted on by the two great rock

solvents, rain water and the carbonic acid of the air, and it is in such localities that reh is most abundant. Long-continued saturation by canal water of a soil containing kankar will also soon produce reh, particularly if the kankar is pisolitic and near the surface so as to be also acted on by light and air. And this latter condition prevails in all usar plains, which become the very worst reh beds. But the prime factor in the chain of causes that has led to the denudation of the kankar and to the excess of reh must be considered to be the extensive levelling operations which were in a measure necessary before the forests of pre-historic India were annihilated, and the huge marshes that harboured hippopotami drained. In a forest-clad and undulating country but little kankar can be exposed to the direct action of the atmosphere and water.

The kankar itself is of the nature of stalactite, and is formed by excess of calcareous matter infiltrating the soil and forming pipes and nodules below the surface. It doubtless largely owes its origin to the feldspar in the Himalayan gneiss. With an undulating surface, surplus kankar in solution in rain water lodges in hollows, and is probably under normal conditions re-formed in this way. In Banda, where the red Bundelkhand gneiss has rotted into black cotton soil, crystals of feldspar may be observed on the surface and kankar in the soil below in every stage of formation, and evidently derived from the solution of the feldspar. So far there is no single exception to the rule that reh occurs only in localities that have been disafforested and extensively levelled by bunding and other agricultural operations. It requires no small amount of abstraction to conceive that a dead level was never the normal character of the surface of the Gangetic Valley. To Mr. Cockburn belongs the credit of being the first observer who fully realized the value and interconnection of these two simple but important factors in the production of reh—extensive levelling and kankar. Mr. Cockburn asserts that no country which Nature has succeeded in clothing with primeval forest can remain a level plain, and there can be little doubt that the plains of the Gangetic Valleys were once covered with primeval forest.

There can be no greater contrast in point of fertility than between Pargana Kanauj in Farukhabad and the adjoining Pargana Tirwah in the same district. The soil of Kanauj, though cultivated for the past 3,000 years, shows no diminution in fertility, and last season bore crops of wheat and mustard 5 feet high. Pargana Kanauj is undulating throughout and irrigated from wells. There are no canals. Pargana Tirwah is intersected by the Ganges Canal and an extensive network of rajbahas. The country is a dead level. The crops are miserable and stunted, the

produce being less than half of what it is in Kanauj, and the incautious traveller along the canal is likely to be struck with blindness from the dazzling reh. The contrast in fertility between the higher and undulating portions of Pargana Bilhour in the Cawnpore District with the lower and level portions which are canal-irrigated is equally well marked, and villages with an undulating surface situated in the heart of the reh country will invariably be found unaffected and bearing good crops. Small kankar or bajri in the process of conversion into reh may well be observed along the newly-opened Bhognipur Branch of the Etawah Canal and within three miles of the station of Etawah itself. These are the first symptoms of the disease in the locality, but the canal has only been opened six or seven years, and there are yet very few distributaries which are the real agents of the mischief. Canal water, though perhaps not so powerful a rock solvent as rain water, is nevertheless capable of rapidly dissolving kankar exposed to light and air. That the kankar becomes reh is an indisputable fact. The Government of the North-West Provinces is fully alive to the importance of attempting to reclaim these lands, and the experiment of covering reh land with deposit of canal silt is now under trial. If the kankar theory is correct, Mr. Cockburn believes that it will also be found that the sources of the reh are limited, and that the reh could easily be exhausted by the simple plan of scraping it up close to the ground during the month of May, when it is at its worst. These operations, he is sanguine, would, in four or five years, reduce the salts to an inoffensive limit, when it might become necessary to cover the surface of the field with 8 or 10 inches of rich alluvium obtained either from the deposits of the Ganges, or, if in the vicinity of the canal, from the rich leaf-mould which is being rapidly formed along the puttries of the canal. It would be a great mistake to reduce and thin the jungle along the canals, and this we believe the canal authorities are now doing. With the diminution of the jungle, the formation of humus will cease, and the day may come when it will pay the department to sell this humus as manure. Hundreds of tons of dried Confervæ annually go to waste along the rajbahas, and this weed ought to make an excellent manure, being highly diatomous.—*Englishman.*

CELLULOID, A NEW WAY OF UTILISING WOOD.—Celluloid is really nothing more than developed papier mâché; but developed so highly by the use of hydraulic machinery, new glazings, and fire-proof methods of treatment, that it may be considered a totally different material

for all practical purposes. The directions in which it has been utilized are numerous, one of the strangest being the construction of railway wheels for Pullman cars. In Pullman City, Chicago, there is an enormous factory devoted entirely to the manufacture of celluloid articles for railway purposes. The wheels are discs of celluloid pressed under a hydraulic ram of about 100 tons on each wheel, and having a hollow nave for the reception of a steel pipe-box. Both the pipe-box and the steel tires with which the wheels are shod are pressed by hydraulic power of 40 tons, and are absolutely immovable except by hydraulic pressure. So strong and lasting are these celluloid wheels that each wheel wears out three steel tires before becoming useless—a fact that speaks for itself. As roofing, celluloid is far superior to most materials, the method of its preparation, and more especially the way in which it is glazed when finished, making it waterproof; while its shining surface makes it less inflammable than wood, owing to the absence of small roughnesses or projections which the flames could catch hold of. Probably no alteration will, however, be made in carriage building till some terrible accident brings home to the authorities the inferiority of the present materials. This happened in Victoria, where the terrible experience of the great railway accident of a few years ago caused a complete revolution in the rolling-stock. It was noticed that the worst cases were those of passengers injured by the splinters from the wooden framework of the damaged cars, which lacerated them fearfully. Consequently public opinion forced the railway company to abolish wood from its list of materials, and to make the cars throughout of soft sheet steel and leather. The roof, frame, floor, and seats are all of this soft steel, the seats being of stuffed leather rivetted down, and only the window sashes being of wood. The idea is that in a collision a soft steel carriage will not splinter, but merely dent in like a jam pot, thereby causing little or no additional loss of life, and the idea has been vigorously taken up. We are not advocating that system for India, as even if coated with felt, steel carriages would be terribly hot for this climate; but celluloid would suit admirably. In many other ways also it would be found invaluable. Furniture (except chairs, the legs of which are too thin to suit the material), barrels, and hundreds of other objects can be made of it at very small cost. Another material that is excessively economical and very useful is "compressed wood" made from fine saw-dust, which is extensively used in some parts of America. The saw-dust from pine-wood and larch is the best for this purpose; and before it can be used, it must be ground quite fine on a stone—must be, in fact, reduced

to real *dust*, free from chips and the small splinters of which ordinary pit saw-dust is full. When the dust is properly sifted, it is forced into shape under hydraulic pressure, and remains under pressure till properly consolidated. In this way, buckets, furniture, &c., are turned out in large quantities, the material being suitable for anything that does not have to sustain a very considerable cross strain : for instance, it would not be suitable for a horizontal bar in a gymnasium. Not only is this invention an immense economy of wood, using up as it does small pieces that would otherwise be wasted or, at best, burnt as firewood—a terrible waste of a real timber tree when we consider how many trees are fit for nothing else—but it saves an enormous amount of carpenters' labour, since the articles are turned out nearly finished from the press. To prevent, however, the necessity of having a separate die for every kind of work and every detail of furniture, a newer development of the system simply produces blocks—if they can be so called—of about the required size and shape, which are finished by the carpenters exactly as a block of wood might be. One special advantage of this invention is that other materials can be mixed with the saw-dust, so as to give the product properties that it would not otherwise possess. Thus, asbestos is mixed with the wood dust, so that the material becomes fireproof, and boxes, desks, and cupboards of fire-proof wood are thus procurable. Other new materials might be advantageously used, some of which we may mention in another article.—*Indian Daily News.*

GRAPE CULTIVATION.—It is certainly very much to the credit of the present age that a taste for flowers and ornamental foliage should be spreading so widely among the better classes of the community. While we should be glad to see even more than the present care and attention devoted to the improvement of these plants, we shall still more heartily rejoice to find such of the more choice exotic fruits as have become acclimatised more generally cultivated. It has always seemed to us as especially strange that the grape, which is so delicious a fruit, has not been introduced into private gardens, where fruit-growing is more or less systematically practised. As far as we know, the grape can, under necessary precautions, be raised in almost every part of the plains of India, but more especially on the slopes of the hills and mountain-ranges, which rise up in all directions. When grown from cuttings, the vine calls for no special care and attention, except at the first start, and again when about bearing. The soil best suited to it is a light

sandy earth, as much as possible free from moisture. Where the soil happens to be of a stiff clayish nature, it can be improved by trenching it to the depth of 30 inches, or even as far as 3 feet, and by replacing it with sandy earth mixed with two-thirds of fragments of decayed cocoanut wood and one-third of small white sea shell in alternate layers. The cuttings might with advantage be put down in beds laid down with little pieces of stone, which shall subserve free drainage at the roots and prevent any undue accumulation of moisture, which is always injurious and often destructive to the plant. Once planted, and when it has fairly taken root, the vine may be left pretty much to itself. It will with the hot season dry down to its very roots, but spring up again in fresh life and vigour with the succeeding rains. If manured at this time, the plant will greatly benefit. But it is generally, or rather as a rule, that the vine, when raised from a cutting, takes three years to fruit. As soon as the rains have altogether ceased, about the end of October, the roots of the plant should be completely laid bare in order to subject them to an artificial winter and to check further vegetation. After the roots have continued exposed for fifteen or sixteen days, the plant ought to be pruned, leaving, according to its age and strength, two, three, or four shoots, with so much of the previous year's wood as shall exhibit three or four healthy eyes from which the bearing wood of the season is produced. When these eyes begin to bud, as they generally do in about a week after pruning, the roots, which had till then remained bare, should be covered over with earth, mixed up with a large proportion of manure. At this stage the vines should be regularly watered morning and evening until the fruit is almost fully developed and begins to swell and ripen, when the watering is repeated every third or fourth day, or, indeed, as often as may just suffice to keep the plants in a strong and healthy condition. If the vines are pruned at the end of October, they will generally bear fruit for the table about the end of the January following ; and as they cannot be expected to continue bearing in the same perfection above a month or five weeks, it has been found possible to secure a regular succession of crops to the end of April, and sometimes even till the middle of May, by deferring the pruning of a few plants till November and even December. About a fortnight after the vines have ceased bearing, the roots are again bared ; and the processes of pruning, manuring, and watering are repeated. Rotten fish and bone-dust have been found to be excellent manure for the grape-vine. It is hardly necessary to say that in Kashmir the grape-vine has been cultivated under the supervision of French agency as a source

of profit, and that brandy, champagne, and claret have been manufactured of a quality that has been well spoken of by people who ought to know. A taste for spirituous and fermented liquors has struck such deep root in India, that though its growth may be checked, we doubt whether it can ever be completely extirpated. In view of this fact, it seems to us that it might be to the advantage of the whole community if the wide cultivation of the vine were encouraged for the purpose of ensuring a supply of pure and wholesome wines and sprits, which would, if sold at cheap prices, soon replace the use of those vile and deleterious country liquors, which are destroying so large a proportion of the native population, both body and soul.—*Indian Agriculturist.*

Denudation of Forests in Hyderabad.—For the last ten years the denudations of forest commenced in His Highness the Nizam's territories, and notably in the jungles of the great jagirdars: these are still being encroached upon in a manner which is highly injurious to the most vital interests of the country. For the purposes of present gain, immense tracks of jungle have been sold to rapacious contractors, who have cut down indiscriminately all description of trees: grand old banyans and pipal trees, the growth of hundreds of years, have been destroyed to furnish fuel for the railway, the cotton mills, and rafters for the houses of village communities. With such recklessness has denudation progressed, that on some tracts not a seed-bearing tree has been left standing for the purpose of natural reafforestations.

Oil of Eucalyptus.—Mr. S. G. Wallace, of West End, Ootacamund, has for some time past been engaged in conducting a series of experiments with the oil of *Eucalyptus.* The oil is extracted from the *Eucalyptus globulus*, which grows luxuriantly on the Nilgiris Hills, and is said to possess great medicinal virtues. It is largely used in some of the hill tracts in Northern India, and is gradually coming into use in Southern India. It is specially effective in cases of rheumatism, bronchitis, &c., and is a good deodorant and disinfectant. The experiments made with it by Mr. Wallace have been attended with very considerable success, and the oil is said to have effected some marvellous cures in cases of chronic dysentery. The oil has a pleasant taste and odour and is a powerful tonic. Mr. Wallace's labours in this matter are deserving of encouragement.

Forest Surveys in Southern India.—At a Conference held at

Ootacamund in July last it was arranged, subject to the approval of the Governments of India and of Madras, to employ a survey party, in the future, exclusively on forest surveys on the 4-inch scale, owing to the urgent requirements of the Forest Department; and as these arrangements have been confirmed, the party will, during the ensuing season, be employed on surveys of the forest in the districts of Madura, Tinnevelly and Salem, in which there is said to be an aggregate area of 1,657 square miles of fully reserved and demarcated forest lands ready for survey.—*South of India Observer.*

BROUSSONETTIA PAPYRIFERA.—The paper mulberry, which we learnt from the report on the Lucknow Horticultural Garden was affording a promising material for paper-making in India, possesses, it appears from a similar report on the Saharanpur Gardens, the additional advantage of growing successfully in *usar* and *reh* tracts, doing better indeed than the Australian salt bush. If experiment proves this characteristic to exist, there is a chance yet of utilising profitably those sterile waste tracts where the excess of salts deposited on the surface by capillary attraction looks like snow in the hot summer day.

A DESTRUCTIVE FOREST SERVITUDE.—In the last Annual Administration Report of the Native State of Travancore a reference is made to a local "established usage," of which the British Resident remarks :—"I had no idea until now that the curious arrangement described was in existence. It is this: Anyone at all is free to enter upon the Sircar waste-lands, clear portions, fence them in, build upon, cultivate, and otherwise treat them as private property free of rent, till called upon to pay the assessment."

A HINT FOR THE JUNGLE.—A test for the purity of drinking water is given as follows by Professor Angell of the Michigan University :—"Dissolve about half a teaspoonful of the purest white sugar in a pint bottle completely full of the water to be tested, and tightly stopped; expose it to daylight and a temperature up to 70° Fah. After a day or two examine, holding the bottle against something black, for floating specks, which will betray the presence of organic matter in considerable proportion."

CEDAR WOOD PACKAGES FOR TEA.—A Ceylon paper publishes letters from London tea brokers and others, which appear conclusive as to the harmlessness of cedar wood packages for tea.

THE

INDIAN FORESTER.

Vol. XV.] September, 1889. [No. 9.

SOME NOTES ON THE CONNECTION EXISTING BETWEEN FORESTRY AND AGRICULTURE IN INDIA.

BENGAL SECRETARIAT LIBRARY.

PART I.

No. I.

THE close connection that exists between Forestry and Agriculture in India has hardly had that prominence given to it in the discussion of these great subjects that it deserves. That these subjects are great and important ones is admitted on all sides; but the beneficial effects to agriculture in India which must result from careful, scientific, and systematic Forestry, are not as yet so universally admitted by agriculturists and the masses as they have a right to be: in the end Forestry will prove its undoubted claims to such consideration, but, I fear, not till experience has taught many a bitter lesson.

In Continents forests perform the same useful functions for agriculture in a climatic point of view that in islands and sea-bound countries are performed by the ocean. We need not go any further than this simple fact to account for the backwardness in the knowledge and practice of forestry which exists in the British Isles. Surrounded by the sea, all the climatic advantages derivable from forests are present; while the unrivalled wealth of coal and iron does away with the other great reasons for forests, *i.e.*, fuel and building material; the latter term I am using in its very broadest sense. Turn, however, to the Continent, and there we notice the great attention paid to forests. Germany and France take the lead, but in Austria, Russia, Italy, Norway and

Sweden, and in Spain and Switzerland, all are careful of retaining and improving their timber reserves.

To illustrate my meaning and intentions more plainly, I would compare the relationship existing between Forestry and Agriculture to that which exists in ordinary life between husband and wife. Forestry stands in the place of the husband, dark, stern and strong, but protecting and cherishing ; Agriculture, bland, benignant and bountiful, may, in my parable, be described as the wife. Deprived of the aid and resources derived from forests, agriculture pines and languishes, and becomes barren and unfruitful. Forests retain and distribute equally moisture deposited by the clouds, supply food for crops, wood for implements and fuel, and regulate the harshness and severity of the elements. These benefits have hitherto been overlooked ; it is only comparatively recently that they have been recognised. There is little reason to wonder perhaps that the benefits derivable from forestry have not up till now been duly appreciated. Till almost within the memory of the present generation, forests have universally been looked upon as dangerous, harbourers of thieves and malaria, and useful only as mines—and mark! *as never failing mines*—for the supply of timber for building purposes, agricultural and household implements, and for fuel. That this was an egregious error was first discovered in Europe. Western civilisation, though later than its Eastern congener in its conception, has discovered this. The reasons, therefore, are obvious; the very circumstances which retarded Western civilisation at its outset—that is, its rigorous climate and its unyielding soil—have proved most wholesome spurs to its onward progress: and one of the lessons learnt in this progress is the immense value of forests, climatically and economically. In the East the lesson has not yet been taken to heart, though Nature is ever teaching it. Although at first sight it may seem a paradox—yet so it is—the demands of civilisation in highly civilised countries on forests are far greater than in those less civilised. The calls of civilisation on forests and forest products are far heavier than those of barbarism: besides, the actual necessaries of life, manufactures, art, and science all combine to intensify the drain. First necessity, the mother of invention, discovered aids to wood in the satisfaction of these demands, and her descendants, invention and science, have interfered to lessen the strain by, in the first place, finding substitutes, and, as knowledge gained ground, by moderating the demand and repairing the damage caused by excessive demand. How soon this demand, when made by civilisation, has proved too heavy for

unassisted Nature has been demonstrated in America, where civilisation leaped into the arena fully equipped or very nearly so, and so soon began to exhaust Nature's resources. It is solely owing to the slow progress made by civilisation in India that her once mighty forests have stood the drain so long. With a restless, energetic people, such as are the Western races, the damage done by the denudation to which her forest-clad tracts was being subjected would have been discovered long ago. Nature in the indolent East is so soft and gentle in her ordinary moods, and the pressing wants of man in a semi-civilised condition are so easily satisfied, that, had not Western energy been infused into India, it is possible that for years to come the strain would not have become so unendurable as it now is. Even now, in the more backward districts, away from large towns and the great centres of commerce, the people could satisfy their wants from forests as they at present exist, even without protection, for many a year to come: but the ever-widening circle caused by trade is making greater and yet greater inroads on Nature's stores, and forests in particular are fainting under the burthen: and, linked indisolubly with forestry, agriculture is suffering also.

Forests existed long before agriculture sprang into being: as in the old, old story, woman was taken out of man, so has agriculture been taken out of forests. In pre-historic days forests doubtless existed wherever foothold could be obtained: not for many ages did the bright inspiration dawn in the breast of one of our progenitors that, by scratching up the bosom of mother Earth a little, he might thus improve and increase his simple fare of wild fruits and herbs. It was thus that agriculture made her first appearance on the scene. There is but little doubt that, as in all other productions of Nature, so in the case of agriculture, the great fundamental laws of evolution and selection have been at work: little by little, step by step, the staple cereals of life have been evolved from grasses: as a case in point, I may mention the wild ragi, a grass which is evidently a close progenitor of the ragi of cultivation (*Eleusine coracana*), the principal food-grain of Mysore and the south-eastern portion of the Southern Mahratta country. The grain procured from this grass was eaten in large quantities by the starving populace of Mysore in the great famine of 1877-78. So little by little, step by step, agriculture has advanced, growing under the protection and fostering care of forests till she has arrived at her present advanced stage. And now agriculture waxes fat and kicks. In the old days it was sufficient to eat and live, but now the pressure is far greater. Agri-

culture is turning impatient, grasping and ungrateful, forgetful of past benefits: "Make room for fields, your appointed task is done, we can do without you, you are obsolete," is the cry with regard to forests. But Nature's laws are immutable, and where forests are removed without just and due reason, drought, pestilence, famine and flood appear, and call attention to the fact. In the West they are wiser in their generation than in the East; but we shall learn our lesson here all in due time; we are learning it now: witness the advance made by forestry in the last 15 years; we are yet far off our goal, but we are on the way to it. Forestry and agriculture in India are linked together, and lack of vitality and prosperity in the one cannot but tell its tale on the other.

No. II.

Whether forests have any effect on rainfall or not is as yet a moot point: but, though not perhaps actually proved to demonstration, it must, I think, be admitted that the balance of proof is strongly in favour of the forest theory. To go back to the days of our boyhood. We all know that as air is cooled, its power of retaining moisture diminishes, and that it is the differences in the strata or columns of air through which clouds drift that occasion the fall of rain. The rainfall is always heavier on the sea-board, in the neighbourhood of large lakes, &c., than elsewhere. Precisely the same conditions exist as regards the atmosphere above forests and the atmosphere above lakes. Who among us has not, as evening drew on, moved out from under the shade of the trees, where the camp is pitched, to the open to be cooler? The temperature under forests is more equable than in the open country: and the same observation is made with regard to the temperature in the vicinity of large sheets of water. And as trees retain moisture by the agency both of their roots and their leaves, the atmosphere in and surrounding a forest is moister than that of the surrounding country. One word more and I have done: treeless regions are always barren ones, equally whether in the Torrid or the Frigid Zones, in Siberia or the Great Sahara.

It is very much to be deplored that the conclusions regarding the effects of forests on rainfall arrived at by Mr. Ribbentrop and Mr. Blanford should have been rendered void and useless in consequence of the unscientific manner in which the rainfall observations had been made by the Revenue authorities (vide *Indian Forester*, Vol. XIII., No. 1, pp. 44 to 49, and Vol. XV., No. 1, pp. 39 to 41). I am strongly of opinion that in spite of discouragements, these observations should not only be continued—

I presume that they are—but that they should be largely extended as regards the field of operation. Observatories should be set on foot in every circle throughout India and in every division of every circle, and not only that, but two or three observatories in every division. The observatories should be erected at some distance apart from each other, and I would recommend that the observatories *outside* forest limits should be *at least* 3 miles distant from any forest: the weight of evidence gained from observatories so situated would be far more valuable and trustworthy than if placed nearer forest limits. The observatories should, of course be in pairs, one inside and one outside forest, for comparison's sake. Supervision too is most important, and Divisional Forest Officers should themselves check observations and measurements as much as possible: intelligent foresters and guards could easily be taught how to conduct the experiments, and doubtless one officer at least in each circle would be forthcoming who would cheerfully give his services for the purpose of tabulating the returns, &c. The results to be looked for are of immense importance to forestry, and therefore the experiments should be conducted by foresters who are interested in them, and who would not go through with them as a mere matter of form, as is the case when the measurements are left to revenue subordinates.

But whatever may be the general opinion as to the effect of forests upon the actual rainfall, there are no two opinions as to the storage of water and the prevention of erosion by tree-growth. Ride along the foot of a chain of hills, and suddenly you will come on a stretch of fields seamed by innumerable little water-courses, wrinkled like the face of an old man: the soil has been largely washed away, and stones are plentiful everywhere: cast your eye on the portion of the hillside abreast of you, and you will find it bared of vegetation; most probably the land is alienated, and belongs to an inamdar. The crops raised in these fields are nothing like the ones raised in the fields at the foot of the tree-clad portion of the hills: ask the tenant, and he will tell you that at first he had too much water and a great portion of his crop rotted, and afterwards the rest got burned up by the sun, and then he will probably talk of his "*nasib!*"

Here is a bare and barren spot, there is no water procurable nearer than from the village well; but there it bubbles out of the hillside by this large stone, fresh and clear—about two miles away perhaps, on the top of the hill, is a small patch of vegetation, trees and brushwood, not more than 10 acres in extent. This spring is known to all the country side, and Brown, Jones and Robinson,

from Dustypore close by, wot of it well; "many a time and oft," when out small game shooting, have they quenched their thirst thereat, "that fellow with the tiffin basket being out of the way as usual." One day a tribe of Gonds proceed to cut down those trees and clear away the brushwood, and cultivate the ground thus cleared on the "kumri" system, being allowed so to do by a paternal Government. The wily bania of Dustypore hears of this piece of cultivation; when the grain is ripe it passes into his hands, and Basappa, the Gond, gets a few bottles of mhowa liquor, dear to his simple heart: the next time Brown, Jones and Robinson proceed to slake their thirst at the well-known spring, they are disappointed, and straightway prophesy "no end of a hot weather:" if you tell them the cause of the effect, you are laughed to scorn, and at the whist-table that night it is unanimously resolved that you are perfectly cracked on the subject of forests!

The above are familiar and, comparatively speaking, unimportant examples of the evils which follow the reckless removal of forest growth and the neglect to reclothe with vegetation denuded hillsides and catchment areas of water: but they serve to show how such neglect may lead to great and disastrous results. Sir Charles Dilke on his recent visit to Karachi was much struck with the great expansion of the place, especially with regard to its shipping industry; but—and this is a very large but—"*the bar which formerly existed has been removed at enormous labour, and replaced by another almost as evil, though enough sand has been dredged out of the harbour as would make a local Himalaya if it had been properly utilised.*" (*Bombay Gazette*, March 21st, 1889, bi-weekly edition). No doubt the Indus is a difficult river to manage: it is, however, very probable that a tithe of the money spent in dredging the harbour, if expended on the preservation and protection of the banks and head-waters of the mighty stream and its tributaries, the Jhelum, the Chenab, the Ravi, the Sutlej and the Beas, would have kept the harbour freer of silt than it now is, and saved Government many thousands of rupees.

Fife Lake, or (to use the cognomen by which it is most usually known) the Karakwasla Tank, supplies, in conjunction with the Mutha Canal, drinking water to the City and Cantonment of Poona and to the Cantonment of Kirkee, and also irrigates a tract of country in the north valley of the Bhima River for a distance of about 55 miles. The construction of the lake and its distributary canals cost upwards of five millions sterling: the work is a triumph of engineering skill, and reflects great credit on Colonel Fife, R.E., who constructed it. But the lake is silting up, the water

supply is decreasing, and possibly it may come to pass that all this money has been thrown away: the silt must be removed, and in any case this cannot but be an expensive undertaking. Government woke up to the danger, and in 1886-87 a Committee, composed of Mr. King, C.S., the then Collector of Satara, Mr. Shuttleworth, Conservator of Forests, N. C., Bombay, and Messrs. Burke, C.E., and Clifton, C.E., Executive Engineers of the Irrigation Branch of the P. W. D., was appointed to enquire into the causes of the diminution in the water-supply and to suggest corrective measures. They made the enquiry, and submitted an elaborate and able report. This report was, however, condemned by the Commissioner, C. D., as being too sweeping, and impolitic also: and a Deputy Collector, Mr. Sathè, was appointed to revise the scheme: Mr. Sathè was in turn relieved by a brother Deputy Collector, Mr. Sitaram Damodhar! Bathos *in excelsis!* The report of four experts in their particular branches, submitted to the criticism of unprofessional subordinates! So far as I know, nothing has been done up to date. The greater part of the catchment area of Fife Lake lies in the semi-independent Native State of Bhor, and this fact of course complicates matters; but it is an axiom of common polity that the few must suffer rather than the many, especially when, as is the case here, the few, or to put it plainly, the Sachír Pant of Bhor, are killing the goose that lays the golden egg. The jungles are being enormously over-worked. Whole villages are given out on contract (timber brushwood and all) to be swept clean, as I know of my own personal knowledge. The Executive Engineer for Irrigation, Poona, experimented during the monsoon of 1888 on the deposition of silt in the Fife Lake, by submerging flat boxes $2' \times 2' \times 1\frac{1}{2}'$ on the bed of the reservoir, and after the rains the deposit in the boxes at the head of the lake averaged 8 inches: the experiment shows fairly plainly how things are going.

The yearly deposit of silt in Bombay Harbour is something incalculable. Mr. Aitken, at one time Engineer to the Port Trust of Bombay, writes to the *Times* as far back as 1886, and says:—"There was deep water in Bombay Harbour *only where there was a rapid current to keep the channel open.*" In the six years 1883-84 to 1888-89 over nine lakhs of rupees have been expended upon dredging operations: one quarter of this sum would have effectually secured the protection of the area which drains into the Harbour, and at the same time a splendidly productive property would have been secured to the purchaser, be it the Port Trust, or be it the Government. Warning might surely be taken from

Cambay, Diu and other Coast Ports, and from the inland tidal channels in Kolaba and Ratnagiri—harbours and waterways, once largely availed of by commerce, now almost entirely closed against it. Like Cassandra of old, we wail forth prophetic forebodings which fall on but half-opened ears; let us be thankful for small mercies; we should be thankful that they *are half-opened!*

N.B.—In the composition of this paper, I have been largely indebted to the Administration Reports of the N. C., Bombay, for the years 1886-87 and 1887-88.

No. III.

The chief end and aim of forestry is, I take it, to produce *timber:* and everything else should be made subsidiary to this. In a typical forest, there should be no grass or undergrowth of any sort; everything ought to be kept under by the canopy shade, which it is the ambition of every forester to promote. Here it will be seen that I come at once to an open issue with Professor Wallace. I reiterate—*pace* Professor Wallace—that it is the province of the Forest Department to grow *timber: pasturage* is in the province of the Agricultural Department, and should be taken up by that Department; grass in a forest is out of place, still if necessary, or rather if the Agricultural Department are not in a position to do so, the Forest Department will provide pasturage; but what I would say on this point is, keep the two things distinct, forests as forests, pastures as pastures: forest and pasture in one and the same place are incompatible with one another. Shade is an indispensable comfort for animal life in the burning East, and this can be secured in pasture lands, near village sites, along roads, &c., but call the pasture lands pastures; do not misname them forests.

In the Bombay Presidency, in nearly every village, a tract of land is set apart for free grazing: this tract of land is called "*gairan*" (*lit.* cow forest). The only exception to the rule that I know of is Khandesh, and yet—*mirabile dictu!*—Khandesh is *the* great pastoral province of the Presidency! This "gairan" was set apart at the time of the Survey Settlement, the proviso being made that Government could resume it at any time, or give it out to cultivation should necessity arise. All "gairan" lands are notified as Reserved Forests, yet I shall never forget how I once scandalised the Revenue authorities by proposing to close a certain portion of "gairan" in a certain village, the "gairan" in question being about four times as much as was needed by the villagers: needless to relate, no portion of that "gairan" was ever closed. There are other cases where the "gairan" is miser-

ably inadequate for the purposes for which it was intended; it usually adjoins the village site, and is in fact nothing more or less than a standing ground for the village cattle. The timber in these (so-called) reserved forests is not—I may remark *en passant*—very plentiful as a rule. I shall have more to say on this portion of the subject of "gairan" later on. The inclusion of these free-grazing lands in reserved forests, and the introduction of the "fee" system of grazing, should prove the death knell of "gairan," that is, if the policy of Government be pursued to a logical conclusion, which perhaps is too much to expect.

The introduction of regularly organised working plans into our forests will soon tell its tale. Nothing in this world is easier than to criticise, and criticism from a critic profoundly ignorant of his subject is more easily pumped out than from a man who is versed in his subject. I am here referring to Professor Wallace's Chapter on Forests in his "India in 1887." I have a great respect for Professor Wallace as an authority on *Agriculture*, but I really do not hold any high opinion of his knowledge in *Forestry*, and I wonder that some one carrying heavier guns than I do has not yet attempted to refute the principles enunciated by him in the book referred to: perhaps he has been left alone as not being worth powder. Certainly some of the views propounded by him are startling in the extreme, and entirely opposed to those held by professional Foresters. It must be remembered that even now the Indian Forest Department has but barely emerged from the infant stage, and never yet has Forest Department had such a task set it. Throughout the length and breadth of India not a single typical forest can be found: in every one the axe of the unlicensed and untutored wood-cutter has wrought damage, damage extending over centuries. Many of the so-called forests handed over to our charge are barren hillsides, deprived of all vegetation, and, in a great many cases, even of the very soil. These tracts are burthened with rights and privileges which have to be dealt with with the utmost consideration and regard, and the custom of grazing anywhere and everywhere meets us at every turn: in fact, in India, more than in any country of the world, forestry and agriculture are mixed with and merged in each other. If this great fact were fully recognised by both Forest and Revenue officers an enormous stride towards the well-being of the country at large will have been taken.

I have seen none of our working plans yet, and I speak with due humility when I advocate the system of "Jardinage" as propounded by M. Ad. Gurnaud. I am emboldened in the expres-

sion of my opinion by the view taken of this system in Nos. II. and III. of the current Volume of the *Indian Forester*. So far as all the Bombay forests that I have seen are concerned, it appears to me to be the only practicable method of working them: the treatment which they have undergone precludes the usual working plan method, no kind of order or classification being possible. The great thing to be aimed at *now* is, I submit, as large closures as possible and for as long periods as necessary. By this I mean till the forest has recovered sufficiently to admit of classification, the closed compartments to be worked through systematically, removing all mature, diseased and over-crowded trees. Till the ground is thus cleared I do not see how any (even) approximate estimate of yield can be arrived at.

As these forests arrive at maturity, that is, at an exploitable age, the question of grazing as it stands at present in India confronts us. The answer to the question is that the people must be educated to provide their own grazing; in no other country in the world does the State provide the farmer or grazier with pasturage for his cattle: why should it be done in India?

There are many so-called patriots, who are moving heaven and earth to increase what they imagine to be their political rights, and to secure what they call self-government; but they overlook the very pith and marrow of self-government, that is, the management of their own domestic affairs. There is no use in denying the fact that the average Indian is not able to look after himself, or perhaps a better way of putting it would be that he prefers not to look after himself, and allows others to do it for him; and so it is in the matter of grazing. The ryot allows his flocks and herds to multiply as they please, confident that a benevolent "Sirkar" will provide for them somehow or another. The Indian ryot must be educated out of this mode of thought, and taught to depend upon himself, and, as in all matters educational, the process must needs be a slow one. The introduction of the fee system of grazing is a wholesome measure and a step in the right direction: Government "kurans" can still be kept for grazing, and fuel and fodder reserves will, of course, be an aid; but gradually and surely grazing in forest, *quâ* forest, must come to an end if forests are to be forests in anything but in name. That the ryot can and will provide amply for his cattle without State aid is exemplified in Guzerat, where there are no forest lands, but where the finest breed of cattle in the Bombay Presidency, perhaps in India, is produced: stall-feeding is largely resorted to in Guzerat, the only Province in India to my knowledge where it is. The Indian ryot, with all his obtru-

sive denseness and intense conservatism, is no fool where his own immediate interests are concerned, and there is but little fear of his failing to provide for his cattle when unable to sponge upon Government.

If, and at present it undoubtedly is, it be the province of the Forest Department to provide grazing, I am of opinion that steps should be at once taken to do so. As forestry improves and increases, the present reserves will become less and less of grazing grounds, as in the nature of things they should. A forest once closed to grazing ought never to provide grazing again : at present the open portions of forest can and will provide grazing for years to come, but this source must eventually fail, at all events to a great extent. The problem of the future has then still to be solved : the people, as I have said before, must be taught to depend upon themselves, and besides this Government grass "kurans" and fuel and fodder reserves in different parts of the country, more especially along the lines of railway and the banks of rivers, should be formed and jealously guarded. *Grass cultivation* should be more taken up than it now is, and attention directed, not only to the increase of the quantity of grass produced, but also to the quality. Guards should be compelled to collect grass seed in large quantities, and this should be sown in those tracts set apart and destined for grazing grounds. This work of seed collection is a very important part of a forester's duties, and it is exceedingly difficult to get guards to collect any but the more valuable varieties of seed : they will bring in teak or sandal seed, but they cannot understand the value of the more common varieties. I have for some time past got my guards to collect grass seeds in fair quantities, but it has been at the cost of endless trouble and ceaseless objurgation !

It will have been noticed doubtless that Professor Wallace advocates the use of leaves as forage, that is, he quotes Duthie as pointing out that "sufficient notice has not been taken of the amount of forage which may be derived from the leaves of trees, which are not so liable as grass to be affected by a want of surface moisture." It is difficult to understand what the Professor means, but, apparently, he advocates the use of leaves as forage in an ordinary way ; this suggestion at once discloses the profundity of the Professor's knowledge of forestry ! Doubtless he would be much surprised to learn that in times of drought forests are thrown open and leaves granted as fodder ; perhaps too it may be news to him that the ryot is quite a *connoisseur* in the choice of leaves for his animals, and that he particularly likes the leaves

of the anjan *(Hardwickia binata)*.* The thinning off of the Indian ryots' cattle, I speak with bated breath, is not so much a thing to be deplored as Professor Wallace imagines it to be: it is amazing how well the native knows the principle of the "the survival of the fittest." Professor Wallace was in India for four whole months and three whole days, and is therefore well qualified to teach our Brandises and our Ribbentrops, our Gambles and our Shuttleworths, the whole system and theory of Indian forestry!

G. K. B.

(To be continued).

THE IMPERIAL FOREST SCHOOL.*

It has apparently been decided that the Director of the Forest School at Dehra is not to teach, and that he is to retain charge of the forests of the School Circle, a very small one, consisting of three divisions only, with about 800 square miles of forest.

The Director receives an allowance of Rs. 200 per mensem, besides the salary of a Conservator of Forests, according to his grade.

Thus the School appointment is a departmental prize, next in value to the Inspector-Generalship; and if the Director is not to teach, it is not necessary for him to be distinguished for a knowledge of scientific forestry, or of some allied science taught at the School. Under present arrangements, the School junior officers (amongst whom may be included officers of the School Circle under the Government of the North-West Provinces, who spend part of their time in the instruction of students at the Forest School) are liable to be kept back permanently in promotion, for the School Directorship may be given over their heads to any senior Conservator, who may or may not have shown any special knowledge of scientific forestry.

As School officers have generally been appointed to the Circle for their known ability by the Government of India, they must naturally feel greatly discouraged by such a prospect, and their discouragement will be reflected in their teaching, and will re-act on the whole development of indigenous forestry in India.

As a matter of fact, owing to the stagnation in the promotion of Forest officers in the North-West Provinces, the School officers

* We publish this article with reluctance, as it contains matters of a personal nature. But as the author subscribes his name to it, and speaks with all the authority of one who has had a large part in organising the Dehra Forest School, and has been its Director for five years, we have no choice but to print the article as it has been received from him.—[Ed.]

have been passed over in the general list of Forest officers by many of their juniors in other Provinces, and especially in Burmah, where, as was pointed out in the January Number of the *Indian Forester*, promotion has been exceptionally rapid, owing to the transfer of several senior Forest officers to other Provinces, and to the recent establishment of the Circle of Upper Burmah.

If the School Directorship were to involve teaching, an officer who had not served an apprenticeship in the School Circle could not well take it, in case of a vacancy arising, over the heads of the School officers. I believe that it is a very great advantage for the Director to teach, as he thus becomes personally acquainted with the character and ability of the students, and can report on them with much more confidence to the Conservators and others who depute men to the School, than if he had to obtain such information second hand from the Deputy Director.

To my mind the only question is, whether the Director, if called upon to teach at the School, should still retain charge of the forests of the School Circle.

Formerly, when all Conservators were not unanimous in supporting the School, and when the forests of the Circle were not, as at present, managed under regular working plans approved by the Inspector-General of Forests and by Government, it was doubtless highly advisable that the Director should control their management.

The present working plans for all the most important forests of the School Circle are to be in force for from 15 to 20 years, and a plan for the scrub forests of the Saharanpur District can be drawn up in a single season to complete the series.

The School Director cannot, therefore, do much to affect the management of the forests, and his work in the Circle must be restricted to supervising his staff of three Divisional officers, two of whom are men of long experience and proved capacity, who thoroughly sympathise with the objects of the Forest School.

It is evident, therefore, that, in the interests of the School, deputation allowances should be provided for the lower School appointments, officers being deputed to these offices from their Provincial staff, and being entitled to any officiating steps of Provincial promotion which may occur during their deputation.

Besides the works above referred to, as written by School officers, Manuals of Botany, Entomology and Natural Science for the use of students have been published by School officers during the last three or four years, whilst the Editorship of the *Indian Forester* has remained at the School since July 1882.

More work of a literary nature would have been done had not the School officers been encumbered with executive work, preparation of working plans, &c., in addition to their School duties; and the extent of this incumbrance can be readily seen on a perusal of the Preface of Mr. Fernandez's *Sylviculture*.

As far as I know, the only Forest officers in India not belonging to the School Circle, who have published any complete works on Indian Forestry, (I include, of course, Dr. Schlich, who is now bringing out a series of excellent Forestry Manuals at the Cooper's Hill College,) are Mr. Gamble and Mr. MacGregor, Conservators in Madras and Bombay.

Forest officers in India, as a rule, have little inducement to engage in scientific work for publication, as their ordinary duties engross most of their time, and promotion depends on administration, and especially financial capability.

When we consider the great importance to India of a scientific study of her forests, surely a little gate might be kept open in the Forest Department for merit of the kind I have referred to; and this might be done by selecting junior officers for the School appointments, who have shown capabilities for scientific research, and by guaranteeing the School Directorship to the men who have been engaged in the work of instruction at the School. This procedure is always followed in the case of the French National Forest School of Nancy, and doubtless also in the numerous German Forest schools, though in their case I do not speak from my own knowledge.

Officers might at first be deputed to the School on probation, and would be liable to be sent back to their Provinces, if their work were not approved of by the Director, or by the Inspector-General, who, as a rule, inspects the School twice a year, and can readily judge of the fitness of junior School officers for higher posts.

A course which has impaired the success of the Dehra Dún Forest School, and at any rate exposed it to unfair criticism, has been the necessity for teaching, in the Rangers' class, men of very different abilities and previous education, some of whom are intended to be Sub-Assistant Conservators, and others to be Rangers, or even Foresters.

It is clear, therefore, that the supervision of these three Divisions by the Director can be of little, if any, advantage to the School, and could be equally well done by the Conservator of Forests, Central Circle, N.-W. Provinces, who has also a comparatively small charge to control.

If these Circles were amalgamated, the North-West Provinces

would be relieved from the cost of a superfluous Conservator and Direction office, or about Rs. 25,000 per annum ; whilst the School Directorship, deprived of the allowance of Rs. 200, would rank as an ordinary Conservatorship, and be no longer looked upon as a departmental prize for senior Conservators.

Certain conditions might be made at the time, giving the School sufficient access to the forests, and perhaps allowing the Inspector-General of Forests to be consulted when new Divisional officers were appointed by the N.-W. Provinces Government to the important Dehra Dún and Jaunsar Divisions, so that their sympathy with the School might be always assured.

As it is, the School regularly visits some of the Punjab Forests, with equal advantage to the students as compared with its tours in the forests of the School Circle.

If the Director of the Forest School were freed from the local duties of a Conservator, he could find more time for original study in forestry, and also to visit the teak forests of the Central Provinces, or elsewhere, and thus gain knowledge which would be most useful to the School, as there are no teak forests in the School Circle, though we all know that it is the most valuable Indian forest tree.

The Conference of Forest officers which met at Dehra in 1886 showed that there is now no feeling of opposition to the training of natives of India at the Forest School, but on the contrary, that all Conservators under the Governments of India and Madras are strong supporters of the School.

The Bombay Government considers its own School at Poona as sufficient for its Forest staff, and does not therefore depute men to the Dehra School, and this point will be referred to further on.

Under the present system, by which the School Directorship is considered as a prize appointment for senior Conservators, I believe that the independent study of Indian forestry will be discouraged.

Mr. Fernandez has recently published a most original and useful work on Indian Sylviculture, which gives proof of long and careful observation in the forests of the north and central parts of India, and he and Mr. Smythies, also of the School Circle, have translated books on European forestry.

It was doubtless owing to the notice these latter books attracted, and to their exceptional merit as scientific Forest officers, that they were originally deputed from the Central Provinces to the School Circle in 1879 by special order of the Government of India. This transfer, though greatly to the interest of the Forest School, has not proved pecuniarily beneficial to one at least of these officers.

A reference to the list of the gazetted officers under the Government of India will show that nearly the whole staff of Burmah, including two of the Conservators, is junior to Mr. Smythies in date of appointment to the Department, and that his present appointment, after sixteen years' service, is in the lowest grade of Deputy Conservators on Rs. 550 per mensem.

This is not due to his having been passed over in the North-West Provinces, or Central Provinces, the only parts of India in which he has served, but because the senior officers below the rank of Conservator in these Provinces have neither been promoted nor transferred to other Provinces, and promotion, therefore, has almost absolutely stagnated there for years.

Although Mr. Smythies has officiated for a time as Deputy Director or Instructor at the Forest School, this does not influence promotion in the Provincial staff, and strange to say such officiating appointments carry with them so little, if any, pecuniary gain, that the appointment of Instructor at the Forest School, vacant by Dr. Warth's departure on furlough, has not been accepted by any officer of the Forest Department.

With the limited School staff of officers, it has been impossible to create two classes from amongst these students; and thus, in order to keep up a sufficiently high standard for the Sub-Assistants and better Rangers, the instruction has been somewhat above the heads of the less instructed men.

But besides the English class, excellent instruction is afforded, at the Forest School, to Foresters who are only acquainted with the Hindustani Vernacular.

It is obvious that this class can only be applicable to Hindustani-speaking students, and hence to the N.-W. Provinces and Punjab, the Central Provinces and Berar, and to the Native States in Central India, where this language is spoken.

In order, therefore, to relieve the Rangers' class from the inferior men who have been deputed to attend, and whose abilities are frequently inferior to those of the better men of the Hindustani class—their only qualification for the Rangers' class being a knowledge of English—it would be highly advisable if schools after the model of the Dehra Dún Vernacular class could be established in Madras, Bombay and Bengal, Assam and Burmah.

The Dehra Dún School would only then accept candidates for Rangerships and Sub-Assistantships, who have received a sufficiently good general education to follow the English Course with advantage, whilst the Hindustani Course would continue as at present.

The maintenance of these Vernacular Schools need not be at all costly to the Local Governments concerned, as many of the Executive staff trained at the Dehra Dún Forest School are thoroughly competent to teach their own countrymen, and the great benefit of an instructed subordinate staff has already been proved from the results of the Hindustani class at Dehra, in the improvement of the Foresters and Forest guards of the forests in Northern India.

As the establishment of these schools would reduce the number of students who might be deputed to Dehra, and as the Government of India cannot well afford to maintain more than one properly-constituted English School of Forestry, the Bombay Government School might be asked to depute their better students to Dehra, and to continue their present School at Poona for the lower class of students.

CAMBRIDGE,
18th October, 1889.

W. R. FISHER.

THE MENSURATION OF TIMBER AND TIMBER CROPS.

(Continued from page 304).

Chapter VI.

Determination of the rate of increase of individual trees and of canopied masses of trees.

Single trees increase in height, diameter, basal area and volume. Similarly, crops of trees increase in height, aggregate basal area and volume.

The *current annual increment* of a tree or crop is the amount by which it has increased during the past year.

Periodic increment is the amount of increase gained during a period of several years.

The *total increment* of a tree or crop is its actual volume at any given time (the sum of all the annual increments up to the given time).

The expression *mean increment*, when used without any other qualifying word, may refer to merely a period, or to the entire age of the tree or crop, or to the age when the tree or crop becomes exploitable.

In determining the increment for a single year, it is customary to assume for it the figure of the mean increment for a short period of years, because the increment for a single year is not only composed of factors too small to be accurately measured, but

is subject to disproportionably large fluctuations from year to year.

For many purposes the increment is conveniently expressed as a percentage.

1. *Increment of individual trees.*

A. Rate of increase in height.

The rate at which the height has increased can be determined at once in the case of most conifers, since the length of each annual shoot is apparent owing to their peculiar mode of branching.

In the case of broad-leaved trees, the stem must be cut across at the top. If the section shows n *annual* rings, the portion cut off is n years old, and the point must be found at which there are exactly n such rings, the number immediately below being $n + 1$.

When the increment for every stage of the existence of the tree is sought, the stem must be divided into equal sections, say of 5 feet length. The number of annual rings counted on the upper surface of each section will give the number of years' growth above it, and the difference between the age of the whole tree and this number will give the number of years which the tree has taken to attain the height at which the rings have been counted. The preceding mode of procedure must be adopted even for conifers when the lower branches have fallen off.

It is evident that if the number of concentric rings does not correspond in any way with the age of the tree, the determination of the height increment, except for recent years the shoots corresponding to which are apparent at the top of the stem, is impossible.

B. Rate of increase in diameter and basal area.

To obtain this, measurements are generally made at the usual height of $4\frac{1}{4}$ feet, or breast height, but they may be made instead at the middle of the tree, or, if great accuracy is required, at several places.

In the case of trees forming one or a regular number of rings each year, the diametral increment of a given year or period of years is found by measuring the thickness of the layer of wood put on during that interval. The thickness of this layer must be measured on several pair of radii, each pair belonging to one and the same diameter. Twice the mean of the several measurements will give the increment sought. A single measurement is justifiable only when both the shape of the stem and crown and the branching are extremely regular. If the tree cannot be felled, Pressler's borer

should be used. The increment of the sectional area at any height will be given by the formula

$$\frac{\pi}{4}(D^2-d^2) = 0{\cdot}7854\,(D+d)\,(D-d)$$

where d = diameter at the beginning of the year or period, and D = diameter at the end of the same.

As regards trees, the different concentric woody layers composing which are not distinguishable, or, even if distinguishable, are not the same in number for each year, the procedure just described is not applicable. In their case the only plan to follow is to measure trees of known ages and growing under identical conditions of soil, locality and leaf-canopy, and deduce the required increment or increments by comparing the various figures thus obtained. Where trees of different known ages are not obtainable, there is no alternative but to select one or more plots representing the average characters of the entire forest in respect of soil, locality, composition and density, and containing between them individuals of all the age-classes. These sample plots should be properly thinned from time to time, so that none but trees growing without any unnecessary check may come under observation. In order to secure this object more effectually, no suppressed or overtopped trees should be measured, nor even those that have their tops exposed to the sky if their crowns have a restricted development owing to lateral pressure from their neighbours. Subject to these exceptions, the girths of all the trees should be taken at regular intervals of one to five years, according to the rapidity of growth of the trees. Unless the trees increase in girth very rapidly, the interval should not be less than two years, for not only is the increment of a single year a small quantity difficult to appreciate, but various disturbing causes, of which the splitting of the bark and its falling off in scales and the varying amount of moisture in it, are the chief, combine to mask or exaggerate it, as the case may be. The measurements should be taken each time along the same circumference; and in order to secure this each stem should be encircled with a steady line of white paint about half an inch wide. The most lasting paint is zinc white. According to the nature of the bark, the ring of paint must be renewed at longer or shorter periods. The entire ring should lie in the plane at right angles to the axis of the bole at the height at which it is painted. The rings should be painted at 4¼ feet from the ground, but if there is some marked irregularity of growth at this height, two rings may be painted respectively above and below this height at an equal distance from it in accordance with the principle laid down in rule (f) on page 185. In mea-

suring the girth, the tape should be laid along either the lower or the upper edge of each ring, never along both indifferently. Experience has shown that it is most convenient to measure along the lower edge. The trees should be numbered consecutively for recognition, and the numbers should be painted on the bark close to the ring. Labels, of whatsoever pattern, should never be used, as they ultimately drop off and get lost, and the trees are then no longer recognisable. A careful register of all the measurements taken should be kept in something like the following form :—

Trees.		*Girth in inches on 1st January.*						Remarks.
Species.	Running number.	1890.	1893	1896.	1899.	1902.	1905.	

In the last column will be entered all pertinent remarks, such as "Released from lateral pressure in thinnings of 1890;" "Overtopped, no longer measured;" "Found dead in 1896," and so on. If trees of all sizes are represented in the sample plots, a series of from five to 15 consecutive measurements, according to the length of the interval at which the measurements are taken (the shorter the interval, the larger the number of measurements required), will furnish complete data for computing the increments for all periods and at various ages. For the jardinage type of forests, each sample plot should contain individuals of various widely-differing ages ; in all other cases, each sample plot should contain only trees belonging to a single age-class, or, if there is a double story of growth, to two age-classes.

C. Rate of increase of volume.

The increment put on during a given number of years n may be obtained in several different ways as follows :—

I. By the cubing of the stem in sections.—The stem being cut up into sections from 6 to 12 feet long, the actual and former diameters (D and d) are measured on each section exclusive of the bark. The actual and former contents of the stem can thus be calculated, and their difference is the increment sought. This method is practicable only when the annual concentric rings are distinguishable.

II. By measuring the actual and former diameters at half the height of the tree n years ago.—The length of stem added on during the past n years is removed, and the remaining log (whose length $= h$) is then cut across through the middle. The diameters D and d being now measured, the increment sought

$$= I_n = \frac{\pi}{4} h \left(D^2 - d^2 \right).$$

III. By means of form factors.—In this case it is assumed that during short periods the form factor does not vary in any appreciable manner. If D, H, and V denote respectively the actual diameter, height and volume, and d, h and v the corresponding figures n years ago, then

$$I_n = V - v = \frac{\pi}{4} (D^2 H - d^2 h) f.$$

This method is suitable for standing trees, and is adapted for species in which the annual rings are not distinguishable. But of course actual measurements are necessary at the beginning and at the end of the interval of n years. Practically the results obtained are sufficiently exact, if h is merely estimated.

IV. By means of the basal area and height.—Let d and l denote respectively the diameter and length or height n years ago, and δ and λ the corresponding increments during this interval of years. Then we have

$$V = \frac{\pi}{4} (d + \delta)^2 (l + \lambda) f \text{ and } v = \frac{\pi}{4} d^2 l f.$$

$$\begin{aligned}
\text{Hence } I_n &= V - v \\
&= \frac{\pi}{4} \left\{ (d + \delta)^2 (l + \lambda) - d^2 l \right\} f \\
&= \frac{\pi}{4} \left(d^2 l + 2 d \delta l + \delta^2 l + d^2 \lambda + 2 d \lambda \delta + \delta^2 \lambda - d^2 l \right) f \\
&= \frac{\pi}{4} \left\{ (2 d \delta l + d^2 \lambda) + (\delta^2 l + 2 d \delta \lambda + \delta^2 \lambda) \right\} f.
\end{aligned}$$

Since n is always a small interval of years, the value of the expression in the second bracket is so insignificant that it may be neglected, and we have, therefore,

$$\begin{aligned}
I_n &= \frac{\pi}{4} f (2 d \delta l + d^2 \lambda), \\
&= \frac{\pi}{4} d f (2 \delta l + d \lambda) \\
&= v \left(\frac{2 \delta}{d} + \frac{\lambda}{l} \right), \text{ since } v = \frac{\pi}{4} d^2 l f.
\end{aligned}$$

In the last formula, when $\lambda = 0$, or something very small, then

$$I_n = 2 v \frac{\delta}{d}.$$

The mean annual increment of a tree $\left(= \frac{\text{volume}}{\text{age}}\right)$ is often assumed to be the current annual increment. This assumption is justifiable in the case of *crops* that are near the age of exploitability, but should never be made in the case of *individual trees*, the mean annual increment of which, provided they are freely lit on every side, obviously goes on increasing up to a great age.

D. Expression of the increment as a percentage.

To render what follows more easily comprehensible by the student, we will here recapitulate briefly the general principles of interest.

If $r =$ the rate per cent. per annum, then $1{\cdot}0\ r = \frac{100 + r}{100} =$ the amount at the end of a year. In the case of simple interest, we have the rule

$$r = 100 \left(\frac{\text{Total interest}}{\text{Principal}}\right) = 100 \times \frac{I}{P}.$$

But in most cases it is necessary to assume compound interest, for which we have the following formulæ :—

$$\text{Amount} = A = P\,(1{\cdot}0\ r)^n, \text{ or } 1{\cdot}0\ r = \sqrt[n]{\frac{A}{P}}, \text{ or } r = 100\left(\sqrt[n]{\frac{A}{P}} - 1\right).$$

For the easy determination of r, Pressler has invented a formula based on the following two assumptions :—(1), that the amount at the middle of the period of years n is equal to $\frac{1}{2}(A + P)$, and (2), that the annual increment is equal to $\frac{1}{n}(A - P)$. He thus gets

$$r : 100 :: \frac{1}{n}(A - P) : \tfrac{1}{2}(A + P)$$

$$\text{and } r = \frac{A - P}{A + P} \times \frac{200}{n}.$$

This formula is only approximate, and always gives something less than the actual value of r.

We will now apply the preceding principles to the determination of percentages for the increase of (*a*) the diameter, (*b*) the sectional area of the stem, and (*c*) the volume.

(*a*). PERCENTAGE OF INCREASE IN DIAMETER.—According to what precedes, this percentage $= \frac{D - d}{D + d} \times \frac{200}{n}$ for any given section. The figure thus obtained cannot be applied to any other section, since, as we know, the increment generally increases as we proceed upwards along the stem.

(*b*). PERCENTAGE OF INCREASE OF SECTIONAL AREA OF STEM.—This percentage

$$= \frac{A - a}{A + a} \times \frac{200}{n}$$

$$= \frac{\frac{\pi D^2}{4} - \frac{\pi d^2}{4}}{\frac{\pi D^2}{4} + \frac{\pi d^2}{4}} \times \frac{200}{n} = \frac{D^2 - d^2}{D^2 - d^2} \times \frac{200}{n}.$$

We may also obtain this percentage (p_a) in terms of the percentage of diametral increment (p_d) thus—

$$\frac{D}{d} = \frac{100}{100 + p_d} \text{ and } \frac{a}{A} = \frac{100}{100 + p_a},$$

Hence $$\frac{100}{100 + p_a} = \frac{a}{A} = \frac{d^2}{D^2} = \frac{100^2}{100^2 + 200\,p_d + p_d^2},$$

that is to say, $$\frac{100}{100 + p_a} = \frac{1}{100 + 2p_d + \frac{p^2_d}{100}}$$

and $$p_a = 2\,p_d + \frac{p^2_d}{100}.$$

In the case of rather old trees, the diametral increment of which is very small, $\frac{p^2_d}{100}$ may be neglected, and then we have

$$p_a = 2p_d = \frac{D - d}{D + d} \times \frac{400}{n}.$$

(*c*). PERCENTAGE OF INCREASE IN VOLUME.—In using method II., described under sub-article C. above, it is obvious that, if h is constant, the required percentage

$$= \frac{A - a}{A + a} \times \frac{200}{n} = \frac{D - d}{D + d} \times \frac{400}{n}.$$

According to Pressler this formula gives the percentage of increase in volume not only for the stem alone, but also for the entire tree inclusive of the branches; and experiment has proved this assumption of Pressler's to be very nearly true.

In order to simplify the calculation, Pressler employs the relative diameter $\Delta = \frac{D}{\delta}$, in which D = the actual diameter exclusive of bark, and δ = the increment of the diameter during n years. Now since

$$D = \delta\,\Delta, \text{ and } d = \delta\,\Delta - \delta = \delta\,(\Delta - 1), \text{ we have}$$

$$1{\cdot}0\,p = \sqrt[n]{\frac{D^2}{d^2}} = \sqrt[n]{\left(\frac{\Delta}{\Delta - 1}\right)^2},$$

and also $$p = \frac{\Delta^2 - (\Delta - 1)^2}{\Delta^2 + (\Delta - 1)^2} \times \frac{200}{n} \text{ approximately.}$$

For the calculation of the future increment per cent., the probable diameter after n years may be assumed to be $D + \delta$, and increment per cent. to be approximately $\frac{(\Delta + 1)^2 - \Delta^2}{(\Delta + 1)^2 + \Delta^2} \times \frac{200}{n}$. Pressler has published tables showing the values of this percentage for different values of Δ from 2 to 300.

In the case of standing trees, of which only the increment of diameter at the base can be measured, and rarely, if ever, the height, the percentage of increase in volume cannot be determined with any very great accuracy. For such trees Pressler has drawn up a set of tables for determining, with the aid of the relative diameter, the rate of increase per cent. for five grades of height-growth. In order to determine the percentage with sufficient approximation without the aid of such tables, we must first find D and $d = D - \delta$ by measurement, and then the rate per cent. of increase in diameter $= p_d = \frac{D-d}{D+d} \times \frac{200}{n}$ (for a single year $p_d = \frac{100\,\Delta}{D}$), and the minimum increase per cent. of volume $p_v = 2\,p_d$. In most instances p_v varies from $2\frac{1}{2}\,p_d$ to $3\,p_d$, and in the case of trees enjoying a full height-increment and forming a canopied crop, $p_v = 3\frac{1}{2}\,p_d$.

In calculating the increment per cent. for a single year, we may employ BREYMANN'S formula, which makes the increase of volume in n years

$$= \text{volume } n \text{ years ago} \left(\frac{2 \times \text{diametral increment}}{\text{actual diameter}} + \frac{\text{height increment}}{\text{actual height}}\right)$$

$$\text{so that } p = \frac{100 \times \text{increase of volume in } n \text{ years}}{\text{volume } n \text{ years ago}}$$

$$= 100 \left(\frac{2 \times \text{diametral increment}}{\text{actual diameter}} + \frac{\text{height increment}}{\text{actual height}}\right).$$

When there has been no increase in height,

$$p = \frac{200 \times \text{diametral increment}}{\text{actual diameter}}$$

Another simple formula to use is that of SCHNEIDER, by which $p = \frac{400}{D\,n}$, D being the actual diameter in inches, exclusive of the bark, and n the number of annual rings in the last inch of growth. $\frac{2}{n}$ is obviously equal to one year's increase of diameter, and this figure can consequently be used in Breymann's formula above.

Both Breymann's and Schneider's formulæ give only the rate of increase per cent. of the basal area, and the rate of increase per cent. of volume must be obtained therefrom in different cases as follows :—

(*a*). In the case of trees possessing vigorous upward growth and standing in a leaf-canopy, by multiplying by $1\frac{3}{4}$.

(*b*). In nearly all other cases of canopied trees, by multiplying by a factor varying from $1\frac{1}{4}$ to $1\frac{1}{2}$.

(*c*). In the case of isolated trees, without any multiplication at all in many instances.

(To be continued).

A FORESTER'S LIFE IS NOT A HAPPY ONE.

THERE are points on which the Forest Department can defy competition, such as malaria, isolation and the discomfort of perpetual camp life; but the unpleasant sensations caused by summer heat are not peculiar to us; other departments experience them, whole Provinces share in them. Personally, I see nothing remarkable in the readings noted by "Q.," though some years ago, when the Forest Officers passed the hot weather under canvas, "Q." might have found it hot enough not only to astonish, but also to annoy, him. When we talk of shattered constitutions, hardships and breaking down, it is a good thing to have a specialty in the way of suffering to bring forward. In point of fact, however, the daily mean temperature during the dry season is generally 1° to 3° lower in the forest than it is outside; and no man who has a house and a thermantidote need sit for a month in a temperature of 98° unless he likes to.

SALAMANDER.

PASTEUR'S VACCINATION FOR ANTHRAX.

II.

IN the previous article the work done in the laboratory for the preparation of the *vaccine* has been briefly described. We will now offer a few hints which may be of use in the fields and districts where the disease may happen to be prevalent.

The ordinary symptoms of anthrax may be found in any book or treatise on the diseases of animals. The affected animal separates itself from the rest of the flock or herd. It appears sleepy and drowsy. Then gradually it leaves off its usual rations, often fixing itself to one spot without moving at all for some length of time. The breathing becomes extremely difficult, the pulse weak, and the heart beats violently and irregularly. Ultimately, the animal often gets convulsions, and death occurs in a few hours.

In cattle, the disease is very rapidly fatal, and there is often no time whatever to properly watch the symptoms.

Blood is frequently found escaping from the mouth and nostrils, but this is by no means, as is considered by many, an invariable symptom of anthrax. Instances are known where animals have died of anthrax without a single drop of blood oozing out from any of the external organs.

The symptoms before death, therefore, scarcely disclose much from which the disease may be diagnosed with any certainty. The *post-mortem* appearances give much greater help in the matter.

On dissection of a dead animal, it will be found that—

(1). The blood everywhere is of a dark tarry appearance.

(2). The superficial veins are full of this dark-coloured blood, which further hardly presents any signs of coagulation whatever.

(3). The mucous membranes are blackish.

(4). The muscular tissue easily breaks away with the fingers.

(5). The heart is full of dark tarry blood.

(6). There are blood spots on the surface of the pericardium.

(7). The intestines are also coloured dark red.

(8). The spleen is considerably enlarged, and is full of tarry blood.

All these appearances (especially the enlargement of the spleen and the non-coagulation of blood) afford some clue to the disease, but it is the examination alone of the blood under the microscope that enables one to say with certainty that an animal is really dead of anthrax. Such examination will show, even in a single drop of blood taken from the heart, liver, spleen or any other organ, crowds of bacilli interspersed amid the blood corpuscles.

The question now naturally arises, supposing there is an animal lying dead before one, how is he to satisfy himself that that animal has died of anthrax and of no other disease? The following may be recommended as the mode of procedure.

(1). Let the blood be taken from any part of the animal and examined under the microscope. Should the characteristic bacilli be found, it will be certain that anthrax has been the cause of death.

(2). If, however, the bacilli are not found, then the animal should be dissected, and blood taken from the heart, liver or spleen in a state of purity and examined under the microscope for the characteristic *bâtons*.

(3). If still nothing be revealed, a drop of blood should be taken from the heart in a state of purity by means of a fine glass tube, and sown in chicken broth. The broth should be put into the Pasteur stove, *i.e.*, subject to a temperature of about 32° C., and watched every day. The liquid under the microscope should be examined on the next day and several days after. If still no characteristic bacilli are to be seen, then one may rest assured, in spite of all *ante-mortem* symptoms and *post-mortem* appearances, that the animal has not died of anthrax.

When, however, there is no animal lying dead before one, but

death is reported at a distance, then the following would be the course to follow. Instructions should be sent somewhat to the following effect to the farmer or veterinary surgeon or other person in charge :—

(1). He should be asked to extract the blood from the heart, liver or spleen, and to send it to the vaccine laboratory in a state of purity. To ensure the despatch of pure blood, a heated glass rod (actual cautery being perhaps preferable) should be applied to the point of the organ from which the blood is to be taken. This is necessary to prevent foreign organisms from entering into the blood. Then a fine glass tube, with its end broken off, should be forced into the organ through the singed surface. The blood should now be sucked up into the tube, and both ends sealed. The tube will thus contain blood in a thorough state of purity.

(2). At the same time as the veterinarian is asked to send pure blood, he should also be instructed to inoculate roughly, if he has no syringe, a rabbit, guinea-pig or goat, and to send it immediately to the laboratory. The rough inoculation is done thus :—

A lancet or ordinary knife being dipped into the blood of the dead animal, the instrument is pricked into and under the skin of the animal to be inoculated. To ensure that inoculation has really been effected, it is advisable to inoculate the animal in three or four places, *e.g.*, in the flanks, on the interior of the thigh, or the interior of the flap of the ear.

Then, if this animal dies, its blood should be examined for the characteristic *bâtons* in the usual manner.

In all these cases very great care must be taken that the blood is examined before putrefaction has set in, as in the latter case the *septic vibrios* would materially interfere with the diagnosis of the disease.

When, after examination of the blood, anthrax has been proved to exist in any district, or when it is known to be prevalent there, by veterinarians and other qualified persons, the farmer or proprietor or official in charge should be immediately written to, to have his herd or flock vaccinated.

The liquid for vaccination, prepared in the way already described in a previous article, is sent to the address given, or to the nearest station, in *vaccine tubes* closed with India-rubber plugs, holding liquid for 20, 50 or 100 sheep, and labelled *première* or *deuxième*, as the case may be. The liquid has to be introduced in

a determined quantity under the skin of animals by means of a hypodermic syringe known as the syringe *Pravaz.*

This syringe consists of a glass cylinder fixed inside a metallic frame. Within this works a piston rod graduated to ⅛th cc. Attached to the frame at the bottom is a hollow needle, through which the liquid for vaccination is sucked up into the cylinder. The *syringe* being completely filled with the liquid drawn up from the vaccine tube, a small *curseur* or nut on the piston-rod is moved up to any required graduation of the rod, and a fixed quantity of liquid thus introduced under the skin of the animal.

Sheep are inoculated under the skin, about the middle of the thigh. An assistant seizes the animal and presents it to the operator, holding it by the fore legs in a sitting attitude. The operator now introduces the needle under the skin of the interior of the thigh, and pushes the piston rod until the *curseur* touches the syringe, and thus the required quantity is introduced into the system of the animal. The syringe is then withdrawn, the *curseur* moved back to a second division, and a second animal inoculated in the same way.

The first operation is done with the *première* or weaker vaccine on the right thigh. The second follows 12 to 15 days after, when the *deuxième* vaccine is similarly injected into the left thigh, *i.e.*, the one that has not yet received any vaccine.

Guinea-pigs, which are so often experimented on in laboratories, are inoculated in the flanks. The assistant catches the guinea-pig by the neck with his left hand, and with his right hand holds down the two hind legs. The operator clips off the hair from the spot which is to be pricked, and then pushes in his *Pravaz* needle in the usual way.

Rabbits are similarly inoculated in the flanks.

Cows and oxen are inoculated behind the shoulder.

Harness horses are also inoculated at the back of the shoulder, but riding horses in the front, to avoid the contact and friction of the saddle with the place of inoculation.

Elephants are inoculated in the tenderest part of their hide.

The quantity necessary varies for the different species of animals. The *Pravaz* syringe, which has a capacity of 1 cc., is graduated into eight equal divisions. One of these divisions suffices for a rabbit, guinea-pig, goat or sheep; two are necessary for a calf, ox or horse; whereas quite half a syringeful is injected under the skin of an elephant.

The vaccine should always be used immediately on its receipt in all its freshness, especially the first one, the strength of which

diminishes more rapidly than that of the second. If through some cause or other the vaccine can only be used on the day after its receipt, the tube or tubes containing the liquid should be kept in a cool place. It is difficult to give any hard-and-fast rule as to what is to be the limit of time between the filling of the vaccine tube and the use of the vaccine on the animal. Perhaps, including the railway journey, five days may be considered quite the limit. Six or seven days may be allowed, but then, should any failure occur, it would be attributable to the delay. Another great point not to be lost sight of is that a tube that has once been uncorked must never be used again. Should there be some liquid left in it, the tube and liquid must both be thrown into boiling water.

Failure may arise also from many other causes, *e.g.* :—

(*a*). From working in too great a hurry when one is pressed for time and a great number of sheep have to be vaccinated.

(*b*). It may again often happen, without its being perceived, that the needle of the syringe is pushed out of the skin again and the vaccine is thus injected into the air.

(*c*). The *curseur* or nut is sometimes, through carelessness, not moved to a new graduation for a new animal. In such cases, it is quite clear that no vaccine can enter the skin ; and then when the second vaccine is used in due course, being stronger and more active than the first, which has not been received into the system of the animal, it may cause death. Care should also be taken, especially when inoculating with the first vaccine, that the animal does not escape the hands of the person who presents them to the operator. This sounds like superfluous advice, but accidents have been known to occur, whereby unvaccinated sheep have got mixed up with vaccinated sheep and received the second vaccine without having been partially protected by the first.

Every bubble of air in the syringe should also be got rid off, otherwise it will often happen that air will be injected into an animal instead of vaccinal liquid, and the animal will be exposed to the same danger as if it had not received the first inoculation at all.

After inoculation, tumours or *œdemas* often appear, especially in horses and cows. They are in no case to be treated, as they generally heal up of themselves, and an incision should never be made into them. On the other hand, it must also be remembered that an animal should never be inoculated again until its *œdemas* have disappeared.

There are very many persons who expect to find mortality in a herd cease immediately on the introduction of vaccine into the herd. Such people should be reminded that, as the herd is suffering from the spontaneous disease, the mortality will continue till the vaccination be completed, *i.e.*, 8 or 10 days after the inoculation of the second vaccine. *The anthrax or charbonneuse vaccine*, like *the small-pox vaccine*, does not cure. It therefore cannot prevent the development of the disease when the seed of the disease already exists in the body at the moment of the preventive inoculation.

But it does often happen that mortality continues even after complete vaccination. In such cases, up to an interval of three months, a special vaccine has to be used, called the "*Vaccine of Re-vaccination*," which is nothing else than a mixture in equal quantities of the *première and deuxième vaccines*.

Three months after, the first and second vaccine are again used.

If from some cause or other the second vaccine cannot be used till 15 or more days after the first inoculation, the latter should be used over again, and the second follow not more than 15 days after.

In Europe it is usual to carry on vaccination during spring, because the temperature is then favourable, and animals are protected against the disease, which is generally in full force only later during summer and autumn. In this country winter would be the most suitable time for operations.

A few words in conclusion will not be out of place here, to show what experiments were carried on before anything definite was known about the true *etiology* of anthrax or charbon. For a long time it was believed that the disease sprang up spontaneously under the influence of diverse occasional causes, dependent, for example, on the nature of the soil, on the water, on forage, on the modes of breeding and fattening. In fact every possible cause has been invoked to explain the spontaneous existence of the disease. But ever since the labours of men like Davaine, Pollender, Bravell, Koch and Pasteur, it has been clearly proved that the disease is due to the presence of a *microscopic parasite* in the blood of the affected animal. One of the first experiments that Pasteur carried out in the field was to fold a number of sheep in open air and feed them on lucerne which had been watered with artificial cultures of the *charbon bacilli* teeming with multitudes of spores.

In spite of the immense number of spores that must have entered the system of every sheep, many of them escaped death, though not without showing that they were gravely affected for some time. Others, a few in number only, died with all the symptoms of

charbon, though after a period of incubation of the parasite of from 8 to 10 days. This same experiment was carried further by mixing the above lucerne with some prickly objects, such as the leaves of the thistle, or the sharp ends of the ears of barley. The mortality was most visibly augmented. The difference in the two experiments lay in this. In the first case the spores found their way out with the excrements, whereas in the second wounds must have been produced by the prickly objects in some part of the alimentary canal, and thus an admission given to the *spores* to do their work of destruction in the blood.

Experiments have been also carried out by burying animals in pits, thereby securing most interesting results. In the month of July 1878 some cows dead of charbon in the Jura were buried in the field of a farmer to a depth of about 2 metres. Ten years after this, some earth was taken from the surface of this pit, and from it were extracted deposits which easily produced charbon.

At three trials that were made within the ten years, at intervals of about three years, the earth from the same spot had in every case given *charbon* to animals that were experimented on. It must be borne in mind that the germs were found after ten years in spite of all the operations of cultivation and harvesting. On the contrary, the earth from spots at a little distance from this pit was found quite harmless. Here was an insight given to the possible origin of the germs. But the opponents of Pasteur were not asleep. "How is it possible," said they, "that the earth, which is such a powerful filter, should allow microscopic germs to rise to the surface? In the natural course of things they should descend, and should be found, therefore, at a lower level even than the depth at which they were buried." Pasteur was now elated at the opportunity given him to refute these opposing arguments. "Might not there be some agents," he suggested, "which bring up germs to the surface?" No sooner was this reply given, when experiment was immediately resorted to. Flower tubs were taken and filled with earth. These tubs were well watered with artificial cultures of the bacillus, and earthworms were introduced into them. These earthworms were dissected after a time, when the very characteristic *bacilli* that were sown were discovered. Similar field experiments were now made, and Pasteur was able to show that earthworms were ever busy in bringing up microscopic germs to the surface. In *charbon-infected* lands the deposits of earthworms as left on the surface were found full of germs that they had brought up from the depths at which animals dead of the disease had been buried. Here then is a palpable cause of the origin of the disease.

The deadly germs of infection are brought to the surface by the earthworms. They are then spread by the wind all over a field. The pasture is necessarily thoroughly infected, and it is no wonder, therefore, that cows and sheep are found at times dying off in such large numbers in certain farms or fields. A very easy prophylactic measure may be taken to do away with one of the great sources of the origin of the disease. Animals dying of anthrax should never be buried in a farm. They should be carted away to be burnt, care being taken that their blood is not allowed to stain the ground over which they are taken, nor the cart in which they are borne away. If this be not possible, a sandy or very porous calcareous soil should be chosen for their burial—a soil, in short, in which earthworms cannot live and thrive.

Dead animals, again, should never be allowed to lie about in a field. Dogs and jackals and wolves would soon spread the infection. Further, by burning the carcase, the dead bodies would be put quite out of reach of those who are in the habit of secretly taking possession of the hides. With such ordinary measures, and with the prophylactic system of Pasteur, there is no reason why in India as great success should not be achieved as on the Continent in reducing the mortality of agricultural animals by eradicating a disease that commits such havoc among them.

N. N. BANERJIE.

A "CORNER" IN EBONY.—It is reported that the Forest Department of the Government of Ceylon are doing their best to form a "corner" in ebony by laying it up in store, and refusing to sell it except at double the ordinary price. From the beginning of October last to the end of April only about 1,600 cwt. was exported, a figure which is a striking contrast to the average of 10,000 cwt. during the similar periods of former times. This course of action is severely commented on in many quarters, and the Government of the island is somewhat blamed for encouraging such proceedings.—*Industries.*

II. Notes, Queries and Extracts.

The Departmental Scandal in Bombay.—Truly one's admiration for the versatile ability of the Indian Covenanted Civilian is kept perpetually on the increase. We have seen it over and over again proved (to the satisfaction of the Civil Service) that he alone is qualified to direct an Education Department; that he makes the best head for the Police; that he is unrivalled as a Postal officer; while as to financial matters, it is recognised that he is the only person whom it is safe to trust with the office, and pay, of Accountant-General. We had not yet heard that the principle had been extended to the Forest Department, but it seems the Bombay Government—as we should naturally expect—has had the discernment to see that it might be carried into this branch also of public affairs, and has appointed accordingly an Assistant Collector to officiate as Conservator of Forests in Sind, passing over the whole of the officers of the Department, some of them with 20 years' service. The *Indian Forester*, which recently published the story, is naturally a little sore about the matter; but if the precedent is steadily repeated, as in the case of Education, Police, &c., the Department will get used to it. The Bombay Government appears to have felt that it was doing something out of the common: for it stated that the reason for the appointment was that the management of the Sind forests "makes little or no demand upon scientific forestry." Therefore it must be given over to an Assistant Magistrate! We have never seen a better specimen of the Civilian syllogism. But why should the Bombay Government shirk stating the middle term?—*Pioneer.*

Evolution of the Saw.—Perhaps no tool has a more interesting history than the saw. According to a recent writer, saws have been discovered in Germany and Denmark which belonged to the bronze age. The metal of which they were composed was cast into a thin shaft and serrated by breaking the edge. Equally interest-

ing discoveries have been made in America. It has been found that saws made of obsidian, which is a kind of glass produced by volcanoes, were used during the stone age in Mexico, and saws and knives of the same material have been found in the alluvial deposits of New Jersey, probably sent thither from Mexico by the action of the water. The Phœnicians are amongst the earliest nations which are supposed to have used the saw. The scholar is not surprised to find a very pretty story accounting for the discovery of the saw in Grecian mythology. Here the inventor is said to have found the jawbone of a snake, which he imitated by jagging an iron plate. One day the uncle of the inventor murdered him in a fit of jealousy, so the story goes; and, if the liberty may be taken of filling out this little romance, by plunging one of the poor young man's saws through his heart. The Lacustrine and other early inhabitants of Europe are credited with having made saws of flint, and the natives of the West Indian Islands had saws made of notched shells. The Japanese saw is a curiosity. It is shaped something like a butcher's cleaver. The shank is drawn into the handle, which is flat, where it is secured by being wrapped with split cane. The teeth are described as being very narrow and pointed towards the handle. Some of the saws used by the ancient Egyptians are exceedingly rude and imperfect, consisting of long thin blades, ragged at the edges, and driven into rough pieces of wood. It is from such crude and inefficient implements as these that the modern saw has been developed. The law of evolution has been operative here, as the philosopher might say, as it has been elsewhere.—*Timber Trades Journal.*

ARTIFICIAL SILK.—One more triumph has recently been added to those won in the domain of the science of chemistry, and the problem of imitating the product of the silkworm has been solved.

The serious epidemics which have from time to time threatened the existence of the silk industry of France and other countries have engaged the attention of many scientists. The biologists have chiefly endeavoured to discover the cause of the so-called silkworm disease, and the means whereby it may be prevented. Hitherto their efforts have met with indifferent success. Like the Phylloxera, or grape-vine disease, the silkworm epidemic appears to be due to certain climatal conditions, which are exceedingly difficult or impossible to grapple with.

The difficulty has been approached from a different standpoint

by the chemists: these have sought to produce in their laboratories a material which should be not merely a clever substitute for, but an actual imitation of, natural silk.

As long ago as 1884, in the month of May, M. Blanchard, in the course of his Presidential address to the Academy of Science at Paris, alluded to this subject, and challenged chemistry to solve the problem. This she has done. Shortly after the President of l' Académie des Sciences had laid this problem before the scientific world, another French savant, M. de Chardonnet, hit upon a method by means of which he believed its solution could be obtained, and, foreseeing great difficulties and much labour before him, he deposited with the Secretary of the Society a sealed paper setting forth his idea. This was done in order to secure the honour of priority to himself, should meanwhile the matter be worked out by some one else. This appears to be the custom on the Continent, and might, by the way, be practised with advantage more frequently in England, for it guarantees a discoverer's priority against those who might lay claim to his ideas. It is often extremely difficult to decide to whom the honour is due, especially where rival scientists belong to different nationalities; but the "sealed paper" system would save endless heart-burnings.

M. de Chardonnet, having secured his ground, set to work upon this difficult problem, and on the 7th May, 1889, he announced its final accomplishment. It soon became apparent that, in order to produce a thread which, by reason of its transparency, silky texture, and brilliancy, should compare favourably with natural silk, it would be necessary to spin it, so to speak, from some liquid solution.

Cellulose ($C_6H_{10}O_5$) was chosen as the starting point. Various sources of this substance were at first tried; but it was eventually found most convenient to employ cellulose obtained from certain parts of young wood. It was prepared in a state of great purity in order to avoid any complicating sub-reactions with the chemicals employed. With this material a pure octo-nitro-cellulose is made by treatment with nitric acid (HNO_3), and then dissolved in a mixture of 38 parts of ether ($C_4H_{10}O$), and 42 parts of alcohol (C_2H_6O) in a proportion of 6·5 per cent. Such a solution is termed collodion.

The collodion is placed in a reservoir of tinned copper, in which an air-pump keeps up a pressure of several atmospheres. This is connected with a delivery tube lying on an inclined plane, on which are fixed glass tubes, each drawn out into a capillary part,

A (*vide* diagram). A second tube, B, surrounds each of these

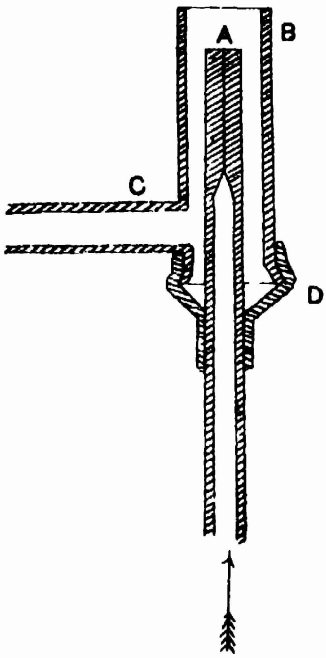

capillary tubes, and contains water continually supplied at the tubule C. The water, kept in by an India rubber washer at D, circulates round the tube. The collodion forced out from the aperture A is immediately solidified at the surface on contact with the water, and flows with this water as a thin thread or filament around B. A small automatic arrangement now comes into play, and the filament is led on to a bobbin, and so wound off. The thickness of the thread can be regulated to a nicety, and the hanks are made up as in the ordinary way.

The operation of denitration is then proceeded with. Substitution products, consisting of starch or cellulose, in which hydrogen is more or less replaced by nitryl (NO_2) are termed pyroxylins. This "thread" is a pyroxylin. Many pyroxylins lose their nitric acid even in pure water, but more completely in dilute nitric acid itself.

The nitric acid is removed by a process of dissociation, which is carried to a greater extent if the bath be kept cold and dilute. The acid should not have a greater density than 1·32, and the temperature should decrease slowly from 35° to 25° C.

In the end the cellulose becomes gelatinous, and capable of absorbing by endosmosis various substances, particularly colouring matters and salts. It will then part with no more than 100cc. to 110cc. of NO_2 per gramme. Collodion can no longer dissolve

it, and it has lost those explosive properties which before denitration (being then really a sort of gun-cotton) it possessed.

It can now be used for making fabrics without fear of danger: indeed, it is claimed that owing to its great power of absorbing salts, it can be rendered less combustible than hemp or cotton by causing it to absorb ammonium phosphate after it has been denitrated.

After denitration it only remains to dry the filaments.

The density of this artificial silk is about 1·49, that is, something between the extreme densities (1·43 and 1·66) of the varieties of natural silk.

The weight which it will bear before rupture varies between 25 and 35kg. per sq. mm.; for raw cocoon silk it varies between 30 and 45kg.

Its elasticity is analogous to that of raw silk. It is able to be dyed by the ordinary processes, and it is said that in brilliancy, texture, and general beauty it even surpasses the natural produce of the cocoon.

At any rate, in spite of the disadvantage of not possessing skilled workmen, M. de Chardonnet is able to exhibit at the Exhibition on the Champ de Mars some samples of his artifical silk, which appears well able to compete with the finest produce of the Lyons silk manufactories.—*English Mechanic.*

PROFESSOR WALLACE AGAIN.—Professor Wallace, who has elected to be an authority on Indian agriculture, has been taken heavily to task by a Home contemporary. It would seem that he has now exhausted the force of the memorable saying that "a prophet is not without honour, except in his own country." His claims to teach agriculture to the Indian people were plainly shown in these columns to be unfounded; and his opinions have been rated at their proper worth in India. We observe from a recent issue of the (London) *Live Stock Journal*, that Professor Wallace's value is beginning to be doubted there as a light in agricultural science. The fact is that he has never realised the truth of the poet's words that "a little learning is a dangerous thing." In respect to his book of lectures on "Agriculture in India," it may be pleaded for him that he was practically ignorant of the Indian conditions of the industry, which he has made the study of his life in its English forms and methods; that his observations, made hurriedly in the course of a brief and rapid tour through limited tracts of India, viewed from a railway carriage, were necessarily cursory and de-

sultory, and that, as a consequence, his generalisations, based on defective and disjointed data, were crude and unreliable. It would be altogether unreasonable to find fault with any man, because his knowledge on any given subject happens to be imperfect and even valueless; but when such a man sets up to teach, where he has all to learn, it seems to us that he fairly lays himself open to severe criticism, in the interests of sound science. It was apparently not enough that Professor Wallace had already shown his want of knowledge of the Indian breeds of cattle, which we exposed in these columns a short time ago; but we now find that his knowledge of the English breeds, with which he should be thoroughly familiar, is superficial and generally incorrect. In reviewing a recent work of his entitled "Farm Live Stock of Great Britain," the *Live Stock Journal*, to which we have before referred, points out some gross mistakes Professor Wallace has made in his description of the breeds of certain cows, of which the parentage is well known. The plates with which this book is illustrated are said by our London contemporary to be "miracles of the distorting powers of an ill-managed camera," and goes on to add, "what is true of the pictures, is true of the letter-press—there is in both some things that are well-seized upon and striking, and a great deal that is hasty and slovenly and inaccurate to an unpardonable degree." As the same contemporary very justly observes, "an author who is so insensible to the importance of verifying facts, on which he bases his theories, cannot be trusted to be more careful in what he allows himself to set down by way of inference or induction." It is clear, then, that agricultural science, in which, as in all sciences, absolute accuracy is an essential element, is not likely to benefit much by Professor Wallace's researches or speculations. We hope, therefore, that, after the *Live Stock Journal's* exposure of Professor Wallace's inclination to accept unverified facts and to draw hasty generalisations in support of his theories, he will cease to be regarded as an authority on agricultural matters by those who are interested or engaged in the pursuit of that industry in India. —*Indian Agriculturist.*

THE FLOATING GARDENS OF KASHMIR.—In the country separating India and China there is much that moves the traveller's wonder, but nothing perhaps more interesting than the floating gardens on the lake or Dol by the little old city so famous for its shawls, called of old Srinagar, and now known as Kashmir. The beautiful expanse of water is situated at the foot of the hill called the Hari Par-

bat or Koh-i-maran. It is about nine miles in circumference, and in shape almost circular. Towards the hill it forms severals canals, of which the chief, Raini-war, flows westward, receiving the water of other smaller canals. Most of these canals have been faced with stone, and a large portion of this material appears to have been derived from ancient Hindu temples, the sculptured surface having been turned inwards. The air and soil of Kashmir derive superabundant moisture from the snows of winter and frequent rains: hence the numerous rivers and canals.

In the formation of these floating gardens of Kashmir their owners avail themselves of the thick growth of grasses and aquatic plants which spring up from the bottom of the lakes, as water lilies, confervæ, sedges, reeds, &c., all intertwined and entangled one with another. Avenues are cut amongst these by the boats separating them into angular sections of varying lengths and breadths. The plants and grasses are then cut away from their roots at a depth of about 2 feet under the water. When so detached, they retain their solidity and are pressed somewhat more closely together. Sedges, twigs, reeds, and roots are next placed over the patch lengthways, and over these mud is spread, fished up from the bottom of the river. This gradually permeates and binds together the matted mass of twigs, reeds, and rushes; and when the surface is thus made, willow stakes are driven through it and down into the bed of the lake, so that the floating garden will rise or fall with the rising or sinking water, but will not escape from its place. By means of a long pole thrust amongst the weeds at the bottom of the Dol and twisted round several times in one direction, a quantity of plants are brought up and carried in the boat to the prepared platform or raft, where they are twisted into conical hillocks about 2 feet in circumference at the base and the same height. A hollow place is made on the top of each, and this is filled with the soft river mud, to which is sometimes, but not often, added wood-ashes. These are for the reception of melon and cucumber plants, which are raised for them under mats, and are thus used when they have four leaves. Three of them are planted on the top of each of the hillocks, which run in double rows along the sides and ends of the bed, separated with a distance of about 2 feet between each.

Tracts of these beds, covering from 50 to 60 acres, are thus kept afloat. The depths of the mat of weeds and the soil range from 2 to 3 feet, and they are capable of bearing a man's weight. It would be difficult to conceive a more expeditious or economical way of raising cucumbers and melons than this repre-

sents, and the success of the growers is extraordinary. Moorcroft, in his "Travels in the Himalayan Provinces," says:—"I have never seen in the cucumber and melon grounds of very populous cities in Europe or in Asia so large an expanse of plant in a state equally healthy;" and he adds:—"This condition indicated the situation to be congenial to the constitution of the cucumber, of which, however, a more substantial proof was found in the very large number of young fruit set near the crown, which certainly exceeded what I have before witnessed in the usual modes of cultivating this vegetable. It has been noticed that the top of each mound is formed into a cup or hollow, which is surrounded by a circle or belt of weed. This prevents the male dust from being dissipated, and causes the fecundating process to be as complete as can be wished." "The general arrangement is a line of cucumber cones bordering each edge, and one of water or musk melons along the middle. The cucumbers are sold three for a coin, of which the value in English money would be about a halfpenny, when they are dear, and when cheap the same coin will purchase from ten to twenty." To prevent robbery, the gardens are guarded through the night by watchmen in boats, with the common mat coverings, under which they sleep by turns. The floating gardens are generally shut in by a belt of floating reeds, which also serve to protect the cones from wind. The boatways through the fences are closed by twisted withes of willow twigs passing from one bed to another.

In the environs and on the banks of the lake are the remains of handsome summer palaces and gardens, which belonged to the ancient Moghal princes, with terraces, cascades, and fountains, fruit and flower gardens, laid out on a symmetrical plan like that of the old French gardens, with alleys or shady avenues crossing each other at regular angles in accordance with geometrical design. Of these famous gardens, the most interesting is that of the Emperor Jehangir, which was enclosed by a canal communicating with the lake.—*World of Wonders.*

MANUFACTURE OF TEA BOXES IN ASSAM.—With the increase in the export of tea, the making of boxes for storing the produce has now become an important industry. Since 1875 the manufacture of tea boxes in the valley districts of Assam has increased from 1,384 to 379,089, the latter figure representing the outturn for the last official year. In 1875 the import of boxes stood at 136,718, and in 1888-89 it had gone down to 127,827. The machines which are

used in the summer for rolling and other purpose in the gardens are employed in winter to work the saw benches: hence tea boxes are now extensively manufactured on the various tea estates. Besides these, there are nine saw mills in the Lakhimpur and one in the Darrang districts, where boxes are made for sale. For reasons best known to themselves, some of the owners of saw mills in the former district are unwilling to furnish information regarding the number of boxes turned out; but according to the divisional officer's estimate, about 200,000 boxes are made by all the saw mills in that district, while the divisional officer at Darrang reports that 13,441 boxes were sold by the Tezpur saw mill during 1888-89. In that year Sylhet and Cachar received 23,075 boxes from Calcutta, and exported 131,453 containing teas, from which it is concluded that 108,378 boxes had been made locally, as compared with 47,938 made in those districts in 1875. As in the valley districts, large quantities of boxes are made on the gardens, and also there are many carpenter establishments where boxes are made for sale. For the convenience of shippers these concerns are found on the banks of the main rivers.

WHITE ANTS AND MANGOE TREES.—If the bark of the tree is attacked by white ants, it must be first scraped off at all parts where the animals have made tunnels and painted with kerosine. Let the ground be dug between the trees as deeply as necessary, the soil turned over and watered with phenyl, if procurable; if not with kerosine and water. In Ceylon a decoction of the leaves of Mauritius hemp is used for expelling white ants, but I fear you have got into too bad a state for that to be efficacious. It has the advantage of being of course quite harmless to any trees. In using the phenyl, put some in a pail and add water till it is of the colour and consistency of good milk. (Every plantation should keep phenyl. It is perfectly safe with foliage; carbolic acid and kerosine are not. It is exceedingly good for mealy bug). Corrosive sublimate and Paris green will both destroy white ants; dissolve in water, and pour into the holes. But be careful not to poison the trees by putting these poisons too close to the roots. Corrosive sublimate is very popular here, being used dry. The planters have told me that one white ant eats a grain, dies and is eaten in turn by another, who dies, and so on till the nest is exterminate. I cannot quite credit this, but the poison has a very strong effect on white ants. Of course care should be taken in dealing

with corrosive sublimate in bulk, as it is an exceedingly dangerous poison. After you have well poisoned the white ants, remember to manure the trees well, so that they can have strength to recover. If it is possible to flood the plantation for a few days the ants would have to retire, but this is rarely possible here at least. I do not think it would hurt the trees, as I have here splendid old trees growing in water. I should like to know the results of these suggestions should you find time to inform me, as I am collecting together all kinds of notes on destructive insects and methods of destruction.—*B. N. B. Herald.*

Hunting the White Ants.—When I lived in Cooktown, some years ago, writes a correspondent to a Queensland paper, my cottage, which was built of Oregon and Maryborough pine, became so infested by white ants that the place threatened to tumble about my ears. It is not generally known, but the white ant has cannibalistic tendencies, and herein lies the secret of the "cure." Open up with a penknife one of the ant runs, take therefrom a couple of dozen of white ants, mix them into a paste with their weight of arsenic, placing the mass back into the run; stick a bit of paper over the face of the run to keep out the light; and in a fortnight you won't find an ant in the place. They will all have committed suicide by poison. I find from my diary that my cottage, which was some 30 feet long, was perfectly cleared of the pest within fourteen days.

The World's Supply of India Rubber.—It is stated that the belt of land around the globe 500 miles south of the Equator abounds in trees producing the gum of the India rubber. They can be tapped for 20 successive seasons without injury, and the trees stand so close that one man can gather the sap of 80 in a day, each tree yielding on an average three tablespoonful a day. Forty-three thousand of these trees have been counted in a tract of country a mile long by eight wide. There are in America and Europe more than 150 manufactories of India rubber articles, employing some 500 operatives each, and consuming more than 10,000,000 pounds of gum a year, and the business is considered to be still in its infancy.

THE

INDIAN FORESTER.

Vol. XV.] October—December, 1889. [No. 10-12.

SOME NOTES ON THE CONNECTION EXISTING BETWEEN FORESTRY AND AGRICULTURE IN INDIA.

(Concluded from page 340).

No. IV.

BENGAL SECRETARIAT LIBRARY.

Speaking in a general way, no attempt is made by the Indian agriculturist to stall-feed his cattle, or to influence their breeding: this is my experience extending over upwards of twenty years, and gathered in Berar, in Mysore, and in various districts of the Bombay Presidency proper. Here and there there are exceptions, but the above statement holds good as a general rule. On seeing the herds of village cattle going forth to, or returning from, pasture, one cannot but fail to be struck with the number of useless, decrepit, maimed, diseased and worn-out animals contained in them. The veneration for the *lives* of their animals displayed by Hindus is easily accounted for. The ox is his only beast of burthen, of carriage and of tillage, and in the olden days the ox was specially tended for these valuable qualities. Tradition, passing down from mouth to mouth, transformed the animal into a sacred one, and the mystery is solved. The time is drawing on when this tradition will be exploded, and "the divinity that doth hedge a 'byle'" will be reckoned among the things that have been. The "fee" system, though, of course, not designed to that end, will go far to bring this about. The "mild Hindu" is no more a fool than is the "Heathen Chinee," and he will soon fail to perceive the force of paying for the grazing of animals utterly useless to him in every way. The heavy mortality which sometimes occurs amongst cattle, and about which very often so much ado is made, is not an unmixed evil; nay, it is often a blessing in disguise. Instead of

being a loss to the agricultural wealth of the country, it is often a positive gain. It is merely Nature readjusting the balance, and bringing down the cattle to the grazing capabilities of the country. Scarcely ever do the really valuable animals suffer; it is the "refuse" that disappear. As I have said before, the mild but astute Hindu knows well the principle of the survival of the fittest. The plough oxen and the milch kine, you may be sure of it, are well looked after; their useless brethren out on the "gairan" there may die, and welcome, unless the "Prant Sahib" (Assistant Collector) happens to be in the vicinity; in that case he usually has to listen to a tale of woe! Will the ordinary ryot lift a little finger to alleviate the miseries of a dying animal? Not he. If the poor beast is lying in his field, he will, with the assistance of his friends and neighbours, hoist and drag it into the next field,—provided always that the owner of such field is not present,—or on to the road, and leave it to die there with a perfectly easy conscience. The village mahars get the skin, and the village mangs, in common with the vultures, the jackals, and the ubiquitous "pigs," dispose of the carcase in a manner satisfactory to themselves and in accordance with immemorial custom. When a village "khanashumari" (census) shows, say, 4,000 head of cattle, it may with safety be surmised that 1,000 at the outside is the number of really serviceable animals. The Hindu reverence for animal life is carried on beyond the sacred "byle," and is extended to buffaloes, horses, ponies, sheep and goats (sheep and goats do sometimes disappear in a manner unaccountable, especially if there are any Lambacies in the neighbourhood), and hence the pasture lands of the village are over-burdened. The "fee" system is a step in the right direction; and if the people were thrown more upon their own resources, I venture to predict that the number of useless and diseased animals would lessen very considerably and in a comparatively short space of time. The weeding out of useless animals is essential to the right solution of the grazing problem. The ryot is in a fair way of being educated to this point. Improve the pasturage—restrict the animals requiring to be provided with pasture to the really useful, *i.e.*, valuable ones.

Intimately connected with this question of useless stock is the question of breeding; and it is really most extraordinary how indifferent the ordinary ryot, keenly alive to his own interests as he is when once awakened, is to this very important particular. I, who write these lines, once came on a cow in the act of giving birth to a calf, the said cow having lost one of its hind legs by an accident! Another incident came under my observation only a very short

tim eago. I saw a man driving a buffalo-cow stop a wadar's cart, and after a short parley one of the buffaloes in the cart was taken out and put to the cow, and presently the male was back again under the yoke, and dragging away at his load of stone as contentedly as ever! No regular system of breeding appears to obtain anywhere. The bulls are allowed to run entire among the herds till between four and five years of age, when they are emasculated and put to the plough or cart. The consequence is that all the sires are immature and the progeny must suffer. The reason given for putting off the operation of castration till so late in life is that if the animal be castrated earlier, it loses in crest and shoulder and in back and loin. I am not sufficiently well posted in veterinary science to know if this reason is a valid one or not: but in England our cart-horse geldings certainly do not seem to lose in power from early castration. The native method of castration is a truly revolting one—*pace* Professor Wallace again—and I fancy any one trying it on in England would very shortly be prosecuted by the Society for the Prevention of Cruelty to Animals. These young bulls are allowed to run loose in the herd, and to leap any cow that may permit them to without let or hindrance. The only mature ones, in a general way, are the sacred bulls, let loose in the fulfilment of the performance of a vow, or as a thank-offering for the birth of a son. These are allowed to visit the cows as they please. The occurrence, mentioned by Professor Wallace, of bulls leaping cow-buffaloes is by no means uncommon, and abortion often results. Still the ryots' fathers and grandfathers for centuries past have allowed entire animals to mix freely with the females, and it never therefore enters their heads to put a stop to such proceedings. The same system, or rather no system, obtains with all animals: broken-down, spavined, worn-out ponies, for instance, propagate the breed as they please without hindrance or supervision, and the results are visible everywhere in the weedy, under-grown, weakly young ones. The only exceptions (*as a class*) that I know of are the Deccan "dhangars" or shepherds and the Tilaries, a sub-division of the "dhangar" caste. They rear, besides sheep and goats, cattle and ponies. With these people there is some sort of attempt made to keep the breed up, and to ensure that the sires at all events are strong, healthy and in their prime. The "dhangars" castrate their lambs at an early age, usually just before they attain the age of one year: a few of the most healthy and well-formed young males are set apart for breeding purposes, and the remainder of the batch are emasculated: the technical term used for the operation is a

suggestive one. A lamb when castrated is said to have been "*kasái karoed*," in other words, made fit for the butcher. The Bombay and Poona mutton markets are largely dependent for their supply upon the flocks of the Deccan dhangars. The Tilaries also castrate their sheep, but they deal chiefly in ponies, cattle and goats. They do not, so far as my observation carries me, castrate their ponies, but they watch their animals carefully, and when a mare is coming into season she is withdrawn from the herd and carefully mated. The consequence is that Tilari ponies, though small, are much sought after; they have singular powers of endurance. Their cattle are veritable wild animals, and to chance upon a herd in the forest, when mounted especially, is sometimes unpleasant. They are, however, very amenable to the voices of their master. In breeding, the same plan is pursued as in the care of ponies. Tilaries sometimes castrate their goats, the result being very extraordinary—huge, gaunt animals of a most peculiar aspect. What is the reason for this care in the breeding of their animals by these people? It is the "almighty dollar;" *they are dependent upon the sale of their animals.* The cattle shows, &c., established by Government in various parts of the country are well enough so far as they go: they are at all events well intentioned; *but they do not touch the great mass of Indian agriculturists.* Who are the exhibitors and who the prize-winners at these shows? The big landowner, the inamdar and the wealthy patel: the ordinary ryot never has a look in; he never even exhibits; he has no animal that would have a chance, and he cannot bear the fees (unknown to authority) which he has to pay before he can get his animal into the show-yard, supposing that he has one that he thinks well of. No, no, to improve the ordinary ryots' plough bullocks and "tattoos," we must work at him through the "gairan," and make him either pay for his pasturage, or provide it for himself. The whole question of the condition of Indian agricultural animals must be painful to the economist, whether political or agricultural, provided always that his attention be drawn to it. I have devoted this section to the question of breeding, for it is closely connected with grazing, which in its turn affects forestry. The number of useless animals for which pasturage is now provided is something enormous, and is nothing more or less than a heavy drag on the revenue of the country—a drag which is not perhaps suspected, but which nevertheless exists: in fact, a condition of things is present which would not be tolerated for one moment by any people, let alone any Government of European discernment and activity. In the

Field of the 6th April, 1889, 'R. R. W.," draws attention to the frightful mortality which obtained amongst the cattle in the Madras Presidency last year. No less than 174,223 head are set down in the *official* returns as having perished from preventible diseases—diseases such as anthrax, rinderpest and foot and mouth disease: and "R. R. W." complains that very little official notice was taken of this tremendous death-roll. The figures are appalling, and well calculated to strike terror into the bosom of the stoutest-hearted British farmer that ever breathed. But "R. R. W." might take heart of grace if he considered that, in all probability, about 170,000 of the huge total were nothing more or less than vermin, utterly useless in every way. When he goes on to speak of the danger of spreading disease by the trade in hides, bones, and even grain, he, however, sounds a note of warning which should indeed be listened to. The danger is indeed a serious one, and the very idea of such a thing forms another insuperable objection to the reckless manner of breeding useless animals which is now so rife.

No. V.

It is not ordinarily the part of a Forest Department to provide grazing, but circumstances alter cases, and in India the task has devolved upon us. At present the Agricultural Department, at least in Bombay—I write under correction—is not in a position to take up the work of creating and conserving pasture lands, and the great bulk of agriculturists are similarly situated. They have been so long accustomed to depend upon Government, that it is impossible to cut them adrift suddenly and direct them to provide for themselves. In my last paper I dwelt on the reckless fashion in which agricultural animals generally are treated as regards their breeding, and there is no doubt but that some check must be placed on this, and I have pointed out that, in my opinion, the best and most effectual method of imposing this check is by making the question of pasturage one of hard cash to the ryot. The next question is that of the pasture lands themselves. I have used above the expression "*creating pasture lands*," and I have done this advisedly and with intent. At present, with the exception of the Amrat Mahal kurans in Mysore, there are no Government pasture lands in Southern India worthy the name: and even the Amrat Mahal kurans are capable of much improvement. The so-called "kurans," which are now under Forest management, are merely waste lands covered or not with grass, as the case may be, by unassisted Nature. These "kurans" should be taken in hand and re-

gularly planted up with grass, just as if they were denuded forest lands to be recovered with timber. As I have said before, grass seed should be collected, and in large quantities, and sown in these "kurans" and in the fuel and fodder reserves which Government are creating in the vicinity of railway lines, &c., or at all events are talking of creating. In "kurans" no attempt should be made to create forest, merely trees enough for shade should be maintained; and in the same way in the fuel and fodder reserves, nothing beyond *fuel* should be attempted. For instance, babul *(Acacia arabica)* should not, for obvious reasons, be grown in a fuel *and* fodder reserve. I give below a list of some of the grasses, &c., to be found in Bombay, together with a short description of each kind. The list does not pretend any approach to completeness; the grasses, seeds, &c., are simply those which have come under my own observation.

1. *Tampergyan-hulu* (Can.) *Desmodium trifolium.*—Somewhat resembles white clover, attains to a height of some 6 inches: springs in June and dies down in February; very useful as fodder; a forest grass.

2. *Bandergyan-hulu* (Can.).—Attains to a height of about 1 foot; useful for fodder; a forest grass.

3. *Ran-sava* (Mahr.) *Advi-dhami-hulu* (Can.).—Very similar to No. 2.

4. *Shadan-hulu* (Can.).—Very similar to Nos. 2 and 3. Both are forest grasses.

5. *Kandil* (Mahr.).—A low grass, useful for fodder; found in forest.

6. *Barka* (Mahr.).—A good fodder grass, grows to some 2 feet high; is used by wild tribes for thatching purposes; a forest grass.

7. *Kerdondi* (Mahr.).—A good fodder grass, found in forest.

8. *Kunda* (Mahr.), *Kangyan-hulu* (Can.), *Spodiopogon pilosum.*—A very objectionable grass, usually found in kurans; attains to a height of some 3 feet; is useful when young as fodder. The underground stems are dug up and used also when fodder is scarce.

9. *Mavalie-gavat* (Mahr.), *Mavali-hulu* (Can.). *Andropogon jacturus.*—A very useful fodder grass, grows nearly 4 feet high; a kuran grass.

10. *Shimpitsa-gavat* (Mahr.), *Shimpgyan-hulu* (Can.).—Attains to a height of some 6 inches: good for fodder; found in kurans, also in the fields.

11. *Dárwa* (Mahr.), *Kírki* (Can.), *Cynodon dactylon.*—This is the well-known "Hariali," a creeping grass, invaluable as fodder

for all animals; is greedily eaten by horses: used by Hindus to decorate the heads of their idols. A kuran grass.

12. *Ganjni* (Mahr.), *Ganayli* (Can.).—Grows nearly 5 feet high; springs at the end of the monsoon and dies down at the end of January or the beginning of February: a good fodder grass, and is used for thatch: an oil, good for sprains and bruises, is extracted from this grass: found in kurans.

13. *Molatsa-gavat* (Mahr.), *Midhi-hulu* (Can.).—Attains to a height of some 4 feet; good for fodder when young; is used for thatch, and native brooms are manufactured from it. A kuran grass.

14. *Char-payatsa-gavat* (Mahr.), *Nalkalina-hulu* (Can.).—Grows to some 2 feet high, and is divided at the top into four: hence the name: a good fodder grass, usually found in kurans.

15. *Panda* (Mahr.), *Hongi* (Can.).—An essentially monsoon grass, dying down in October; attains to a height of 2 feet; good for fodder: a kuran grass.

16. *Karred* (Mahr.)—A hill grass, useful as fodder.

17. *Taruda* (Mahr.)—Attains to a height of about 2 feet: a good fodder grass, found on the low Deccan hills.

18. *Delga* (Mahr.)—Very similar to No. 17.

19. *Bari* (Mahr.)—A good fodder grass; does not grow high; a hill grass.

20. *Chirki* (Mahr.)—A hill grass; attains to a height of about 2 feet; useful for fodder.

21. *Darbi* (Mahr.), *Durab-hulu* (Can.).—A grass found near water; attains to a height of nearly 4 feet; seeds in January; useful as fodder when young. This grass is used on the occasion of "*shrads*" (anniversary of father's death), to sprinkle water over the food offered to Brahmins by the celebrant.

22. *Tambit* (Mahr.).—Grows to a height of 4 feet; is good for fodder when young; useful for thatching purposes; found near water.

23. *Wala* (Mahr.), *Andropogon muricatus.*—The "khus-khus" grass; good for fodder when young; useful as a thatch. It is, however, chiefly employed for its roots in the manufacture of the well-known "khus-khus" tatties; found near water. Mats are also made from this grass, and punkahs, or rather fans.

24. Spear-grass, *Kusal* (Mahr.), *Upkheda* (Can.), *Heteropogon contortus.*—Is good when young as fodder for cattle, but after seeding, the "awns" hurt the mouths of animals. This grass is used, mixed with mud, to plaster walls, and it is also wrapped round mangoes to ripen them; grows to about 2 feet high. When mature, it turns rusty in color. Found everywhere.

25. *Pandri kusal* (Mahr.), *Shilab* (Can.).—Very similar to the red or common spear grass; grows about 9 inches high.

26. *Chimuyatra-gavat* (Mahr.), *Gubi-hulu* (Can.).—This is hardly a forest or a kuran grass; it is found on buildings and ruins; it is, however, greedily eaten by cattle, and the seed is used as food for birds in captivity.

27. *Bongrat* (Mahr.).—A variety of the "*kusal*" or spear grass, and, like it, found everywhere.

28. *Rosha* (Mahr.), *Andropogon Schœnanthus.*—This grass is two kinds—one bearing bluish, the other white flowers. An oil is distilled from it, which is in great demand as a cure for rheumatism. I have only come across this grass in Western Khandesh. It is found chiefly in forest reserves, but I have met with it in the open country. The manufacturers of the oil are Mussalmans, who buy the grass from the Bhíls at the end of September, when it is ripening. The right of collecting it in Government forest lands is sold annually. The oil extracted from the grass with the blue flower is green in colour, and is locally termed *sophia;* that extracted from the white-flowering grass is called *motia*, and is colourless; the latter variety is deemed the more valuable of the two. The process of extracting the oil is a very primitive one: *attar* is also obtained from this grass.

29. *Babar* grass (*Pollinia Eriopoda*), and

30. *Munj* grass (*Saccharum Sara*), are rare in Bombay. I have found them in the heart of Khandesh, more particularly in the Erandol Taluka. Both these grasses are used in the manufacture of paper.

31. *Boru* (Mahr.), *Galjni-hulu* (Can.).—A reed found in kurans and on the banks of rivers; height 3 to 4 feet; useful as fodder when young. The stems are used for native pens and also as spindles by weavers.

32. *Lorohala* (Mahr.), *Sher-kabi* (Can.).—Grows near water like the boru; is a reed *not* useful as fodder; is used in the construction of "*chiks*," wada's huts, &c.

33. *Ap* (Mahr. and Can.).—Grows near water; seeds at the end of November; a good thatching material; the flowers contain a material resembling cotton, which is useful as tinder.

34. *Kolomb* (Mahr.).—A very valuable reed; useful for fodder when young; is a splendid thatching material, and is much valued for this reason by the inhabitants of the Konkan.

35. *Karvi* (Mahr.), *Strobilanthes.*—Is found everywhere along the Ghâts; it is very useful to the people in many ways—in building their huts, folding their sheep, inclosing their cattle, &c.

All these grasses are not, of course, equally useful; some are nothing more or less than downright weeds. The spear grasses, for instance, though nourishing to animals when young, should not, I think, be encouraged, as they are positively injurious to animals when mature, and are only eaten by cattle at that time in the absence of other varieties. The reeds, &c., are, of course, chiefly valuable for purposes other than forage, but they should be encouraged for these purposes, such as thatching, for instance. I believe that attention paid to the cultivation of *Rosha* grass would prove remunerative—there are many of these articles of minor forest produce, only awaiting exploitation: the gradual increase in the use of the bark of the "*tarwad*" (*Cassia auriculata*) is a case in point. The fruit of the *aonli* or *aola* (Mahr.) (*Phyllanthus Emblica*), of the *beheda* (*Terminalia belerica*), and of the bil or bael (*Ægle Marmelos*), are all sources of revenue which are as yet hardly touched, and there are many more sources still awaiting enterprise.

It will have been noticed that Professor Wallace advocates regular burning of the grass in forests. It is almost beyond credence that any one, let alone a prominent and able agriculturist, should think seriously of such a measure. It serves to show how specialism in any form makes a man one-sided and narrow-minded. Professor Wallace argues that unless forest areas are annually cleared out by fire, insect pests will increase and pasturage will be decreased. Pasturage *in* forest will decrease, as it should, and with the pasturage insect pests also. It is a moot point whether insect pests have their origin in forests. Professor Wallace calmly settles the question by his own *ipse dixit!* Ergot also, he asserts, will increase unless forests are fired. This also is an assertion which requires proof. Ergot will disappear from forest when there is no grass in forest, of that the Professor may rest assured. Ergot is a curse to the cultivation of India. It is found throughout the length and breadth of the land, miles and miles away from any forest. This prevalence of ergot is entirely due to the ryot's carelessness in the selection of seed; it is rather hard to put it down to the credit of forests. I would ask the Professor if annual fires are to be caused in forests, how those forests are to increase and produce timber?—timber, which he as an agriculturist must confess is required, in India at all events, for buildings and agricultural implements. Kill down the grass in forests, encourage it in pasture land, burn the pastures if it be a useful cultural measure, top-dress and manure them as much as you like: these operations fall within the province of agriculture; they are out of place in forestry. We

will burn the pasture lands, an ye like it; but not forests, Professor Wallace, no! not even "upon compulsion."

No. VI.

It may be stated broadly that the Indian ryot, that is, the ordinary up-country cultivator, never makes hay: he depends entirely for his grass upon the waste lands in the neighbourhood of his village. As the middle of the hot weather comes on, the cattle are withdrawn from the hill-sides and forest lands, and the grass remaining thereon is systematically burnt (so far, that is, as is permitted by the Forest subordinates). This is done to better the expected crop of next rains, and, meanwhile, the cattle pick up what they can in the fields and along roadsides. When the rain comes down and the new field crops begin to appear, the animals are driven back again to the uncultivated lands. Very little stall-feeding is ever resorted to; but for this purpose the stalks of the jowari or great millet are generally used: in other parts, where jowari is not grown, the stalks of the principal cereals are utilized. Hay is only made by the grass contractors to Government, by dâk contractors, and by cultivators near large European centres, where hay is likely to be needed by Europeans for their horses. The ryot scarcely ever makes use of hay for his own beasts.

It is a curious circumstance, and it seems to have escaped observation up to date, that the ryot is well acquainted with the advantages of ensilage, and that he has made "*silos*" from time immemorial. Perhaps it was from the native that Sir Herbert Macpherson first obtained the idea of ensilage, which he afterwards so ably and successfully worked out. Grass, however, is never "siloed" by the native: the stalks of "jowari" and wheat and "bhúsa" or bran are preserved in this way. This fact has come under my observation in the eastern talukas of the Satara District and in Bijapur. The "silos" might easily escape notice. To the casual glance they look like gigantic heaps of cow-dung cakes, and might well be mistaken for such, as in fact I did so mistake them at first These silos are called in the vernacular (Mahr.) "*dhepnis.*" There are two varieties of these "*dhepnis;*" the simpler one is generally made use of in the field where the crop has been cut. The material to be "siloed" is stacked, and is then surrounded and covered over by clods of black earth. When the rain comes down, these clods run together into one solid mass, and the air is thus effectually excluded. The heap is then covered over with cow-dung, and the forage inside is in this way kept fresh and in good condition till required. The other "dhepni" is made

use of when the crop is brought to the village and stacked near it. The fodder is first carefully covered over with the stalks of cotton or túar (*Cajanus indicus*), which are in turn covered with clay, and finally completely plastered over with cow-dung. I have been told by ryots that forage, whether jowari stalks or bhúsa, when treated in the manner described, will keep good and fresh for upwards of ten years.

Another plan resorted to by the ryot for the conservation of his grain is the well-known "*peon*" (Mahr.) or grain pit. These pits are often made large enough to contain between two and three hundred maunds of grain. The location of the pit is the first point to be considered, and it is a most important one. It is always placed high, so as to secure good drainage and to obviate the danger of any water finding its way into it, or even settling near it. The mouth of the pit is small, the ground underneath being excavated so as to form a kind of chamber. The bottom of the pit is first strewn with "jowari" or "bajri" stalks and "bhúsa;" the grain to be preserved is then put in, and on the top more "jowari" stalks and "bhúsa" are placed, the "bhúsa" being undermost; earth is placed over this, and then the mouth of the pit is closed with stones; finally, earth to the height of 3 or 4 feet is piled over the mouth and sedulously battened down. Grain thus put away will keep for upwards of 30 years. I have been told that cases are known of grain having been thus kept for over a century. The *locale* of these pits is kept as secret as possible. The grain when the pit is opened is of no use for sowing purposes, but is said to be quite fit for food. In the 1877 famine in Mysore grain that had thus been put away was availed of to its utmost extent, and I was told by a medical man that, in his opinion, the use of this grain for food in such large quantities was responsible, in a degree, for the frightful outbursts of cholera that were always occurring at that time: and I think it very probable that he was right. When these pits are opened, great caution has to be observed. The earth and stones are removed, and the mouth left open for twelve hours at least before any one enters, to allow of the mephitic gases which have been engendered to escape. The man selected to enter the pit first is chosen for his caution and experience, and is almost always an elderly individual. He has a rope tied round his waist, and his stays in the pit are scarcely ever more than seven or eight minutes in duration. It is a question for consideration whether the grain taken out of these pits should be allowed to be sold for human food; but perhaps the country is over-legislated as it is. No doubt forests

breed malarious vapours to a large extent, and all heavily-timbered tracts are, and must be, more or less feverish; but cholera, that dread scourge, disappears when it reaches the regions of forests. Cholera in the Mysore "*malnad*" and along the Western Ghâts is unknown: occasionally outbreaks occur, but they are always very limited as to extent and number of victims, and are invariably very short in duration. In every instance it will be found, upon enquiry, that the disease made its first appearance in some one, either visitor or resident, who had come up from the open country, bringing the poison with him or her. I remember reading, several years ago, of a case in a large up-country station—Meerut I think it was—where there are two sets of barracks, one set being surrounded by trees, the other being in the open plain. Cholera punished the men quartered in the treeless barracks severely, while the regiment in the other lines enjoyed comparative immunity, and this was noted as having occurred on more than one occasion. Trees by means of their leaves absorb the air around them, and, while assimilating the poisonous gases baneful to animal life, give off oxygen, pure and health-producing: yet it is these leaves that Professor Wallace would sacrifice as forage for useless cattle. Leaves are the lungs and stomachs of trees, and are one of the most beneficent features in Nature's economy. In the Konkan trees are deprived year after year of their leaves for the purpose of "*rab*"—a most wasteful and demoralising agricultural operation peculiar to that part of the country; and it is downright painful to see trees by the hundred lopped, maimed and deprived of all resemblance to trees in consequence. The tree most highly prized for "*rab*," and, therefore, the one most savagely attacked, is the ain (*Terminalia tomentosa*), and it is an impossible task to find a fully developed "ain" tree anywhere in the Konkan, except inside the limits of a forest reserve. This question of *rab* is a very vital one, both for forestry and for agriculture, in the tract where the custom obtains, and I hope to say more on the subject further on.

No. VII.

In the discussion of Forestry in connection with Agriculture, the question of the exhaustion of the soil naturally presents itself. Artificial crops, that is, crops raised through the agency of agriculture, exhaust the soil; natural crops, that is, crops raised by Nature herself, or crops which, though sown by man's agency, are such as Nature would herself raise, on the contrary enrich the soil. Artificial crops weaken the soil, as is evidenced by experience: and

hence, where crops of this nature are raised, assistance has to be given as it were to Nature by means of rotation of crops, of fallow, and by manure. By these means the soil is refreshed and renovated. Forest growth (I use the term in its broadest, and, in the present case, ultimate sense) strengthens and adds to the productiveness of the soil. The very finest and most productive soil for agricultural purposes is that known as virgin soil, that is, soil which has up to date been covered with forest, Nature's own covering. Observe Nature's own method of procedure: from the moment that a field is thrown into fallow, Nature commences to work at it. Very soon it will be covered with grass, then scrub and underwood, till at length, sufficient time being allowed, trees are reproduced. Nature manufactures her own manure, the very finest that can be imagined—I refer to humus. Humus contains plant food of the very best description, rich in animal, vegetable, and mineral matter, and locked up in it is abundant combined nitrogen, the most valuable constituent of manure. In a typical forest—I need hardly go in for giving a definition, every one will, I imagine, know what I mean by the expression—no grass is to be met with, but the wayfarer plods his noiseless way through this humus. I have had it at times nearly as high as my knees for long distances, and there is this splendid manure direct from Nature's own manufactory, lying unused in our jungles. It is not altogether useless, for it is nourishing noble trees, but I think it might with advantage be made useful for agriculture. The difficulties in the way are great, for humus-producing forests are rare in India (at least in Bombay), and they are usually situated in places difficult of access, and so distance and bad roads would have to be discounted; but on the Western Ghâts, in Mysore and in Kanara, humus exists to an extent inconceivable to any but to those who have actually seen it—humus, the finest manure extant. Humus is in fact nothing more or less than what is called in gardening parlance "leaf-mould," and all gardeners know the value of that. Preserve forests, then, to the point of typical forest, and this invaluable boon is secured to agriculture; for this humus *could* be transported and made use of with care and management with great advantage to agriculture. Every forest is or ought to be a manure depôt, and, under judicious supervision and management, humus could be removed from typical forests without any appreciable harm to the trees. Humus can exist to any useful extent only in a fully clothed forest. To obtain it, "canopy" must be unbroken or almost unbroken. I am aware that the views put forward here on the use of humus as a manure seem chimerical and far-fetched. I give them for what they are

worth. It cannot be denied that humus is a most valuable manure, and I feel sanguine that it will eventually be largely made use of.

Though according to the European standard the ryot is very backward in his mode of agriculture, yet this backwardness is more apparent than real. No one knows better than the Indian peasant how to get the most out of the *surface* of the soil, so far as his knowledge, which is very limited, carries him, but he is improvident in the extreme and looks not to the future. "Sufficient for the day is the evil thereof" is one of his standard rules of life, and there is no denying but that he acts up to it in its very fullest extent. His wants are few; he is perfectly happy if they are satisfied as they arise. He is very pleased if he gets a bumper crop; if he does not, it is the ever-lasting *nasib!* In the matter of manure the ordinary ryot is very careless and improvident. True, he collects material for manure at odd times, but it is only at odd times; he does not make a point of it, but uses as much as he has got, and is thankful. The principal manure material used in India is cow-dung, and how this is wasted is known to every district officer in India. The persistent neglect of stall-feeding, and the universal habit of pasturing the cattle in wide ranges, preclude the possibility of using the dung as largely as it ought to be used; and the lethargic, indolent nature of the people, making them averse to the taking of trouble, is another reason why so much manure is wasted. In the neighbourhood of villages you will find women and children busily collecting the cattle droppings of the past night, but the droppings in the "gairan" and on hill sides, &c., are but scantily utilised. And another point to be borne in mind is that a large proportion of the quantity of the manure thus collected even is diverted from manurial purposes, being converted into cow-dung cakes (Vern. *bratties*) and used as fuel. In the absence of coal and the limited supply of wood fuel available, the practice must prevail, I suppose, though it is to be deplored. The ashes of the burnt cow-dung are available for, and are to a certain extent used as, manure, but it must be remembered that all the nitrogen contained in it has been set free—nitrogen so invaluable to plant life.

In the vicinity of all villages heaps of manure will be noticed. Each heap has its owner, and each heap is, therefore, jealously guarded. Cow-dung, or, to speak more correctly, cattle litter, is the principal ingredient, but all sorts and kinds of refuse are collected here—remains of vegetables, jowari (*Sorghum vulgare*) stalks, discarded kamblis, &c. Besides these heaps, usually close to each house (frequently on the side of the main street of the

village), heaps of household refuse are to be seen, and these heaps are from time to time added to the large heaps outside the village. My experience is that cow-dung *pure and simple* is not used as manure, as would be gathered from a perusal of Professor Wallace's remarks; it is invariably mixed with other ingredients. This prevents the manure being blown away during the fair weather in a measurable degree, and assists the process of fermentation. Sometimes this manure is stored in pits, but it is generally in heaps.

Animal remains are never used for manure, that is, of set purpose. Should a dead dog or a dead cat get into the manure heap, that is no business of the ryots; it is covered up as quickly as may be, and absorbed into the general mass in a surreptitious sort of way. The export trade in bones is a great evil, depriving the crops of phosphorus, a necessary item of plant food. True, bones never have been used ostensibly for manure, but they found their way into the manure heaps in certain quantities, and were also taken into the soil by natural absorption as it were. Dogs, jackals and vultures dropped them about the fields, and they got ploughed in when thus met with: but the trade in bones as manure, and manure for export too, has brought the middle man into action, and a regular village trade in bones has sprung up. The want of phosphorus in food-crops too will have its baneful effect upon a population almost entirely dependent upon cereals for food. The Bombay Chamber of Commerce has, I understand, taken up the question. It is to be hoped that their efforts will do good.

One of the most valuable manures extant is human excrement, night-soil as it is usually termed. The natives do know the value of it, as is witnessed by its Mahratta appellation of "Sonyatsa Khat" (golden manure), but caste prejudices stand in the way of a general use of it. "Golden manure" is, however, making its way despite of caste. Gold breaks down even the iron barriers of mighty caste, and it is now largely used in the neighbourhood of Poona. In fact, so valuable is it, that the cultivator does not wait till it is converted into poudrette, but uses it in a fresh state. This practice, I am inclined to think, is largely answerable for the outbreaks of typhus and typhoid so prevalent in Poona of late years. As "golden manure" has forced its way to the front with the liberal-minded cultivator of Poona, so is it destined gradually to force its way with the fewer-ideaed cultivator of the districts. As the Israelite of old was bound to go provided with a wooden trowel when answering the calls of nature, so should the cultivator of the present day be bound to provide himself. The hint may be of

value to the sanitary authorities; perhaps they may make a note of it, should these lines ever meet the eye of one of that department. But this golden manure should be made use of. Villagers should be bound by law to answer the calls of nature, as a rule, within certain defined limits, where trenches should be dug, such trenches being filled up with earth as soon as necessary. The gain to agriculture would be enormous. I know as well as any man how impracticable natives are on this point as on many others, but I know of one case where an energetic Assistant Collector *did* get the people in his charge (and it was a fairly large one too) to use certain spots marked out and defined by posts sunk in the ground. If it can be done in one place, it can be done in all, given men of energy and determination at the head of affairs.

G. K. B.

DETERMINATION OF INSECT PESTS.

I SHALL be obliged by your finding a place in your next issue for the following extract from a letter recently addressed by the Superintendent, Indian Museum, to the Director of the Forest School.

FRED. BAILEY, LIEUT.-COL., R.E.,
Director, Imperial Forest School.

"I have to request that all entomological specimens which are forwarded to this Museum may have the locality and date of their collection ticketed upon them, and be accompanied by a detailed account of anything that renders them of particular interest or importance. Immature insects cannot generally be precisely determined without an examination of the mature insects into which they transform; they should, therefore, be accompanied by specimens of the mature form. Miscellaneous specimens preserved in alcohol are of very little use; for immersion in alcohol to a great extent destroys the colours of the specimens, and renders them worthless for exhibition purposes. They should therefore be killed and preserved as directed in the "Note on the apparatus required for collecting insects in India," by Mr. E. C. Cotes, printed in the *Indian Forester*, October No., Vol. XIV.

INJURY TO STANDARDS FROM LIGHT FIRES AND EVEN FROM FIRES NOT IN CONTACT WITH THE TREES.

IN the *Revue des Eaux et Forêts* for August there is an interesting article by "Silvio" on the deterioration of standards over coppice through bark injuries. Such injuries may be merely the drying up and falling off of pieces of bark a few inches square, or

the bark on the whole of one side of the tree may be destroyed. "Silvic" traces these injuries to the action of fire, and notes that during coppice-cutting the woodmen are in the habit of collecting dead and useless wood and burning it in heaps, and that the bark injuries are invariably present on the side of the tree nearest these fires, within a radius of 30 or more feet. Trees with thin outer bark suffer more than those possessing a thicker covering, also the bark injuries are not at once apparent, but commence to show after three or four years in a swelling or wrinkling of the affected part. "Silvio" surmises that the ultimate falling off of the bark is due to decay in the cells of the cambium, brought on by contraction of the cells through excessive heat, though the action of heat may not be directly observable from the outside. I think there are here two points worthy of being noted—*first*, the serious injury caused by insignificant fires in the vicinity of, but not actually in contact with, large trees; and, *second*, the fact that such injury may not become apparent till a considerable time has elapsed. In India at the present day most Europeans and Natives have been educated up to the belief that raging forest fires do more harm than good to tree growth; but on the other hand most of us still flatter ourselves that not so very much harm is caused by unimportant forest fires, as, for example, when a fire occurs in a sál forest, where there is no grass growth and only dry leaves are consumed. There appears to be, however, no reason to doubt "Silvio's" facts, though in accepting them we reserve any possible source of congratulation after some accidental failure in protecting a forest where the supply of inflammable material was small.

S. E.-W.

THE MENSURATION OF TIMBER AND TIMBER CROPS.

(*Concluded from page* 325).

E. Stem analysis, or the determination of the course of the increment of the stem during the whole term of its life.

If any tree forms a fixed number of concentric rings each year, the observation of these rings enable us to trace its life-history, to say when it was suffering from suppression, from insect ravages, from the effects of fire, frost, and from other retarding causes, when it enjoyed complete immunity from such injurious influences, and was a dominant stem growing vigorously, and so on. A longitudinal section passing through every point of the axis of the stem would show all this at a glance, but such a section is practically impossible to make; the stem must be cut across into a number of sections, and the required information sought thereon. The

sections may be made at every 6 feet, but as a tree grows up fastest when young, the lower sections may be longer (up to 10 and even 14 feet in the case of quick-growing trees), while the upper ones may be made shorter. The first cross-cut should be made at the usual height of 4¼ feet off the ground, but there will always be a lower one than this at the level at which the tree has been felled.

The measurement of the diameters and the counting of the rings are operations which take time, and will generally be best effected in camp or at home. For this purpose a disk about 1 inch thick should be cut off the lower end of each section, and carried away to be studied at leisure. To prevent mistakes, the serial number of the tree and corresponding section and other necessary information should be noted on the upper surface of each disk as soon as it has been cut.

The lowest section serves to determine the age of the tree, and the other sections the successive ages of the tree at the heights at which they have been cut. On all of them the annual concentric growths should be marked off in groups of 5 or 10, beginning at the circumference. The outer diameter of each such zone (of 5 or 10 years' growth, as the case may be) should then be measured and recorded in the manner shown in the illustration given lower down. The observer should be careful that the 5 or 10-year groups, marked on the several sections, exactly correspond. Thus, for instance, the first groups of all the several sections should contain concentric rings of one and the same age; the rings of the second groups should be exactly 5 or 10 years younger, and so on. To guard against error in forming the groups, extremely broad or extremely narrow rings should be carefully noted and traced through all the sections.

With the help of the figures obtained from the observations just described, a longitudinal section of the stem can be delineated, showing the whole course of growth. The scale for diameters should be from 10 to 20 times larger than that for heights. A central line being drawn to represent the axis of the tree, the lengths of the sections should be marked off on it according to the fixed scale. At each point of division parallel lines at right angles to the axis should then be drawn, and the measured outer diameters of the respective concentric group-zones pricked off on them. The required section of the tree is completed by joining by a continuous line or curve all the points corresponding to the same age.

The rapidity of growth in height of the tree may be delineated by means of a curve, as described at page 52 of Part I. of Fernandez's *Manual of Indian Sylviculture.* Distances should be

marked off along a horizontal line representing periods of 5 or 10 years, as the case may be. At these divisions perpendiculars should be raised, the lengths of which should correspond with the heights successively attained at the different ages. A continuous line joining the upper extremities of these perpendiculars will be the required curve. The horizontal scale for years should be about twice the vertical scale for feet.

The contents of the tree at the successive ages (every fifth or tenth year, as the case may be) are at once ascertained from the sectional areas enclosed by the outer boundaries of the concentric group-zones, each sectional area being the mean sectional area of a truncated cone, situated half in the upper half of one section, and the other half in the lower half of the one immediately above it.

Finally, the periodic increments of diameter, height and volume can be arranged in tabular form so as to be noted at a glance.

We will illustrate all the preceding remarks by means of an example.

A spruce was felled at 3 inches above the ground, and the stump showed 43 annual rings. We may assume that the tree took two years to attain this height, and it is on record that it was sown 45 years ago. The total length of the tree was 64 feet, the stem was cut up into lengths of 6 feet each, except the lowest portion, which was 4 feet long. On all the sections, beginning from the circumference, the annual rings were marked off into groups of five each, along three different diameters on the two lowest sections (at ¼ and 4¼ feet from the ground), and along two diameters crossing each other at right angles on the rest. For each section the mean of the two or three diameters, according to the piece, was taken. The results of the observations are shown in the following Statement:—

Section.		Total number of annual rings.	Mean diameter in inches at the age of—									Mean diameter with bark.
Serial number.	Height in feet.		5	10	15	20	25	30	35	40	45	
			Years.									
1	¼	43	0·51	1·42	3·70	5·82	7·53	8·60	9·79	10·17	12·40	12·87
2	4¼	37	...	0·39	2·55	4·50	5·92	6·84	7·68	8·61	9·40	9·80
3	10¼	33	...	...	1·57	3·70	5·40	6·44	7·36	8·30	9·03	9·43
4	16¼	30	...	...	...	2·07	4·20	5·59	6·69	7·66	8·44	8·80
5	22¼	26	...	...	...	0·35	2·52	4·31	5·74	6·92	7·89	8·25
6	28¼	23	...	...	...	...	1·39	3·33	5·05	6·42	7·35	7·74
7	34¼	19	...	...	...	...	..	1·83	3·91	5·61	6·68	7·01
8	40¼	16	...	...	...	...	..	0·59	2·59	4·53	5·87	6·22
9	46¼	12	...	...	...	...	...	...	1·01	3·10	4·67	4·98
10	52¼	9	...	...	...	...	...	...	...	1·88	3·64	3·86
11	58¼	6	...	...	...	...	...	...	...	0·39	1·88	2·10

CALCULATION OF VOLUMES ACQUIRED SUCCESSIVELY AT 5, 10, 15.....45 YEARS OF AGE.

	Height of section in feet.	Area in square feet at the age of—									Area in square feet at 45 years with bark.
		5	10	15	20	25	30	35	40	45	
		Years.									
	4¼	...	...	0·0358	0·1104	0·1923	0·2531	0·3223	0·4057	0·4794	0·5251
	10¼	...	...	0·0133	0·0742	0·1576	0·2260	0·2966	0·3769	0·4418	0·4858
	16¼	...	...	...	0·0232	0·0956	0·1688	0·2439	0 3223	0·3883	0·4236
	22¼	...	...	...	...	0·0341	0·1014	0·1803	0·2625	0·3382	0·3712
	28¼	...	...	...	...	0·0103	0·0598	0·1398	0·2260	0·2966	0·3276
	34¼	...	...	...	...	...	0·0179	0·0846	0·1726	0·2439	0·2673
	40¼	...	...	...	...	...	...	0·0358	0·1104	0·1883	0·2088
	46¼	...	...	...	...	...	...	0·0055	0·0533	0·1198	0·1364
	52¼	...	..	...	...	...	...	...	0·0192	0·0717	0·0819
	58¼	...	...	...	...	...	...	...	...	0·0192	0·0232
Total area in square feet of sections of the same age,		...	...	0·0491	0·2078	0·4899	0·8270	1·3088	1·9489	2·5872	2·8509
Contents in cubic feet of the 6-foot lengths at the successive ages, ...		..	...	0·29	1·25	2·94	4·96	7·85	11·70	15·52	17·10
Contents in cubic feet of the lowest 1¼ foot length at the successive ages, ...		...	...	0·05	0·15	0·24	0·32	0·41	0·48	0·65	0·70
Contents in cubic feet of top end at the successive ages, ...		0·001	0·026	0·013	0·008	0·001	0·004	...	...	...	0·016
Total contents in cubic feet of tree at the successive ages, ...		0·001	0·026	0·35	1·41	3·18	5·28	8·26	12·18	16·17	17·82

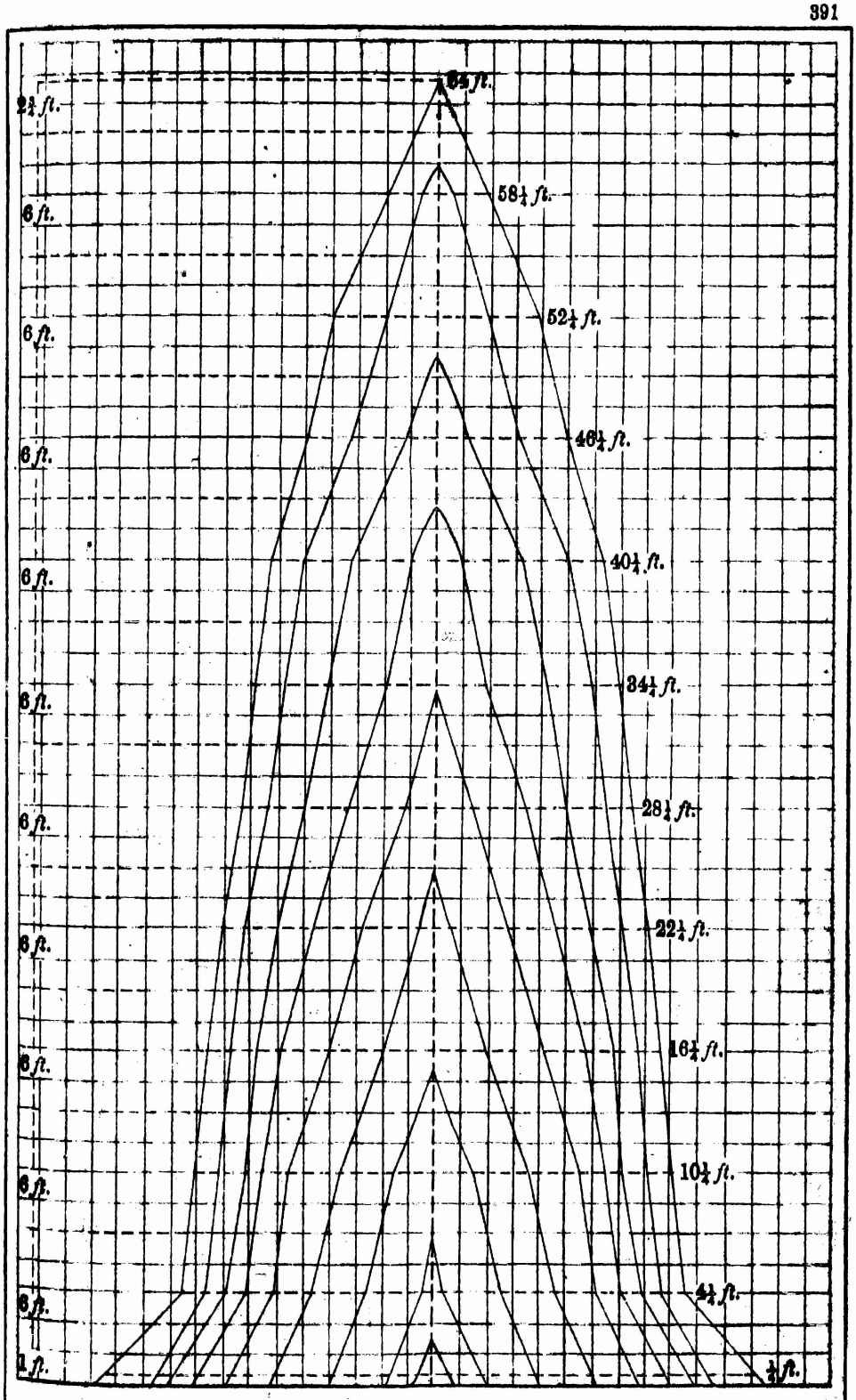

Longitudinal Section of Stem.

(The Scale for diameters is 18 times the scale for heights).

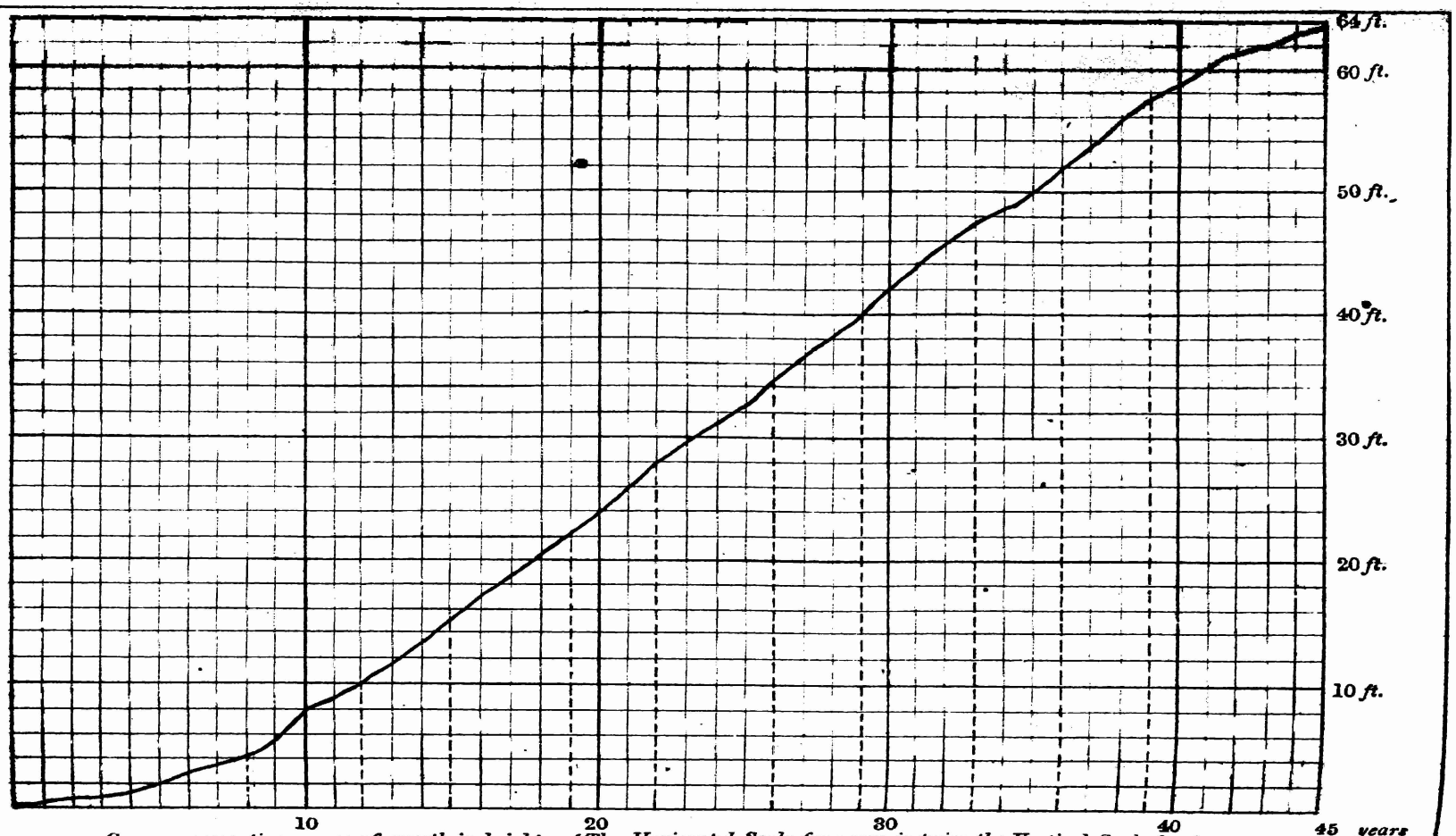

Curve representing course of growth in height. (The Horizontal Scale for years is twice the Vertical Scale for feet).

TABLE SHOWING COURSE OF INCREMENT OF THE STEM.

Age in years.	*Diameter in inches.*		*Height in feet.*		*Volume in cubic feet.*		*Form-factor.*		Increment of volume per cent. $1{\cdot}0p = \sqrt[n]{\frac{V}{v}}$.
	Actual.	Increment.	Actual.	Increment.	Actual.	Increment.	Ordinary.	Absolute.	
5			2		0·001				
				5		0 025			
10	0·4		7		0·026				
		2·2		9		0·32			
15	2·6		16		0·35				
		1·9		8		1·06			24·0
20	4·5		24		1·41		0·529	0·472	
		1·4		9		1·77			15·3
25	5·9		33		3·18		0·490	0·445	
		0·9		9		2·10			10·0
30	6·8		42		5·28		0·499	0·462	
		0·9		8		2·98			8·6
35	7·7		50		8·26		0·513	0·481	
		0·9		9		3·92			7·6
40	8·6		59		12·18		0·513	0·489	
		0·8		5		3·99			5·8
45	9·4		64		16·17		0·530	0·504	
Inclusive of bark,	9·8		64		17·82		0·536	0·509	

3. *Rate of increase of crops.*

In the case of crops it is obvious that we require to know only the rate at which the volume of the crop increases, and that a knowledge of the rates at which the height of the crop and the aggregate diameters and basal areas of the component stems increase, is of interest only so far as these elements are so many factors in the growth of the crop.

A. Determination of the increment at any time.

There are various methods of determining the rate at which a crop has been augmenting in volume at any time. They are—

1.—BY MEANS OF INVESTIGATIONS IN THE CROP ITSELF. In determining the increment it must never be forgotten that no one class of stems can be taken as representative of the whole crop, any more than any individual stem can be taken as representative

of its class. It must also be borne in mind that so far as the standing timber alone is concerned, thinnings cause the rate of increase to fall. Lastly, we have the fact that what is now an average stem of the crop was at one time an overtopping or dominant tree, and may in the future become a dominated or overtopped or even suppressed one.

The simplest way of determining the increment of a crop with the nearest approximation is to determine first the percentage of increase of several stems of each and every component class. If the crop is at the time under a regular valuation survey, this percentage is calculated for the section passing through the middle of the felled sample trees, and the data thus obtained should also be supplemented by measurements made on standing trees. If there is no valuation survey going on, then measurements made on standing trees must supply all the required data.

If V_1, V_2,.....have been ascertained to be respectively the volumes of the several stem-classes, and p_1, p_2,.....their average increment per cent., then the increment for one year (δ) of the several classes will be, $\delta_1 = \frac{V_1 p_1}{100}$; $\delta_2 = \frac{V_2 p_2}{100}$.....

and the total increment of the crop

$$= \delta_s = \delta_1 + \delta_2 \ldots\ldots\ldots\ldots\ldots ;$$

so that the increment per cent. of the crop will be

$$= p_s = \frac{100\ \delta_s}{V_1 + V_2 + \ldots\ldots}.$$

The formula just investigated should be used only when it is required to know the increment for a single year, or for a short period. If it is sought to determine the increment for a long period of n years, another procedure must be adopted. p_1, p_2,..... being found to be the percentages of increase of the respective stem-classes during this period, the volumes v_1, v_2,.....of these classes n years ago may be determined from Pressler's formula thus—

$$v_1 = V_1 \frac{200 - np_1}{200 + np_1};\ v_2 = V_2 \frac{200 - np_2}{200 + np};\ \ldots\ldots$$

The increment for the n years will hence be—

$$\delta_n = (V_1 + V_2 + \ldots\ldots) - (v_1 + v_2 + \ldots\ldots).$$

Lastly, if it is required to ascertain the probable increment for the next n years, we must determine the probable volumes V_1', V_2',... of the several stem-classes at the end of n years by the same formula of Pressler's

$$V_1' = V_1 \frac{200 + np_1}{200 - np_1};\ \ldots\ldots$$

The increment for the n years will be

$$\delta_n' = (V'_1 + V'_2 \ldots\ldots) - (V_1 + V_2 \ldots\ldots) = V_s' - V_s$$

The rate per cent. of increase for the same period will be—

$$p_n' = \frac{V_s' + V_s}{V_s' - V_s} \times \frac{220}{n}.$$

From all the preceding expressions it will be obvious that the increment per cent. of the whole crop can be equal to the arithmetical mean of the percentages of increase of the sample stems only when $V_1 = V_2 = V_3 \ldots\ldots$; and this mean will be approximately correct if the number of sample stems is very large and they are mostly taken from the dominant class.

II. WITH THE AID OF PERCENTAGES THAT HAVE BEEN PREVIOUSLY OBTAINED FROM ACTUAL INVESTIGATIONS IN SIMILAR CROPS. In this case three facts have to be borne in mind, *viz.*, (1) that the percentage of increase falls as the age of the crop increases, and can be assumed as constant only for short periods; (2) that the percentage falls more rapidly, the more quickly the individual trees increase in diameter and volume (crops of poor upward growth yield a higher percentage than vigorous crops of equal age); and (3) that the lighter crop has a larger percentage than the denser one.

This method is employed in open crops and coppice standards, in neither of which cases are tables of yield directly applicable.

III. WITH THE AID OF TABLES OF YIELD.—When such tables are used, the locality, density and age of the crop in question and of the crops from which the tables have been calculated must correspond very closely.

IV. BY ASSUMING THE INCREMENT SOUGHT TO BE THE MEAN ANNUAL INCREMENT AT THE PRESENT AGE OF THE CROP.—This method is applicable to exploitable crops.

B. Determination of the mean increment of a crop for the entire period in which it reaches exploitability.

In the case of all crops that are nearly exploitable the mean increment at the present age is for all practical purposes the mean increment sought. It is only in very old crops that the present mean increment will be found to be too small. For very young crops, and in crops much younger than the age of exploitability, the required mean increment must be obtained from yield tables.

C. Course of the increment of a crop during the whole period of its life.

The stem-analysis (see page 387) of the sample stems can give the course of growth solely of the present main crop (*i.e.*, the crop

exclusive of the overtopping, overtopped and suppressed stems), and as regards the crop at previous ages it can furnish only the volume and height of the largest trees which the crop then contained. Hence, to be able to trace the course of growth of a crop through its successive ages, the same crop must be successively surveyed at each of those ages.

D. Which method of determining the increment of crops to employ according to the purpose for which the information is required.

The determination of the increment of entire crops is generally undertaken for the purpose of framing working plans, and the object then is to ascertain either what the yield of the several crops will be when they are felled, or at what respective ages they will severally become exploitable.

When it is required to determine the mean annual increment of a crop up to the time it becomes exploitable, yield tables should be used if the crop is young, and the formula $\frac{\text{present volume}}{\text{present age}}$ if the crop is nearly exploitable.

When it is required to know what a crop will yield if it is felled within the next 20 years, we must add to the present volume the probable increment for the ensuing 5 or 10 or even 15 years. This increment may be determined either (1) as a percentage in the crop itself, or (2) by adopting such percentages as usually accrue in similar crops at the age of the highest mean increment, or (3) by adopting the mean annual increment of the given crop at the present age, or (4) by using the increment furnished by yield tables.

In some methods of framing working plans it is necessary to know what the yield at the time of felling will be of all the crops, from the youngest to the oldest. This information can be obtained only with the help of yield tables.

Whether a given crop is exploitable or not must be determined by the fact whether its mean annual increment has ceased to increase or is still increasing. This can be settled only by investigations in the crop itself.

4. *General remarks on the course of development of the individual tree.*

The following remarks apply only to seedling trees and not to coppice shoots :—

A. Growth in height.

The growth in height is at first nearly always very slight, and in India remains so, according to the species and to the soil and

locality, for a period extending from 3 to 10 and even 15 and up to 20 years. During this time the seedling is technically said to be establishing itself. As soon as the seedling is thoroughly established, the rate of growth in height increases rapidly, and attains an annual maximum in a comparatively short time. In Europe this maximum is attained in the case of pines and larch in 10-15 years, in the case of the spruce in 20-25 years, and in the case of the beech and silver fir in 30 years. For India we have unfortunately no exact figures, and owing to the continental variety of its soils and climates, one and the same species presents extremely wide divergences. The maximum rate of growth only lasts a short time. The rate sinks rapidly in the case of species in which the maximum is attained early, more slowly in others, until it is reduced to from 3 to 6 inches a year, at which figure it keeps for a great number of years. A total cessation of growth in height occurs only at a very advanced age, and earliest in isolated trees.

Rapidity of upward development reaches its maximum earliest and begins to fall quickest in the most favourable soils and localities. In unfavourable localities, as on mountain ridges, the rate at which a tree grows up remains nearly constant during its whole life, after it has once attained a certain figure. In youth and middle age the rapidity of growth in height in the most favourable localities exceeds greatly that in unfavourable ones; afterwards there is but little difference. The height reached by trees in mature crops is from two to three times as great in favourable localities as in unfavourable ones. It has been recently established that a too close leaf-canopy not only arrests growth in diameter but also growth in height, although the latter is not influenced by the density of the crop to the same extent as the former, and the unfavourable influence begins to show itself only in very dense crops.

B. Growth of diameter and basal area.

The course of growth of the diameter at ground level is similar to that of the height of the tree. The diameter is, however, usually measured at breast-height (4¼ feet). Hence a curve delineating its growth cannot start from zero, but from the point of time at which that height was attained. By the time a tree reaches this stage, the rate of growth of the diameter has either entered upon its maximum or is on the point of doing so. Therefore, as we are accustomed to measure it, the diameter starts at

or near its maximum rate of increase. When the rate of growth begins to decline, it does so, at first more or less rapidly according to species, soil and locality, slowly afterwards, and remains more or less constant for some time.

The rate of increase of the basal area is very slight at first, then augments more or less rapidly up to a certain figure, after which it remains contant or diminishes slowly. The continuance of a dense leaf-canopy up to an advanced age results in an early and rapid decrease of the rate of growth of the basal area of the individual component trees. On the other hand, in the case of trees standing isolated, the rate of growth increases, or at least remains constant, beyond even the ordinary age of exploitability. In the most favourable soils and localities the rate of increase of basal area of the individual tree attains its maximum rapidly (about the 40th or 50th year for European trees) and then declines ; whereas under opposite conditions it augments slowly, but the augmentation continues up to a great age.

C. Development of the form-factor.

The development of the form-factor of a tree is dependent on the rate of increase of the diameter at different heights, which rate itself depends on the amount of standing room and the consequent expansion of the crown. In the case of trees forming a leaf-canopy the width of the concentric rings of growth is greatest at the top, and diminishes downwards to some point close to the ground, and then increases again down to the crown of the roots. The rings are thus narrowest at a certain point in the lowest part of the stem, which point is almost on a level with the ground in young trees, but gradually moves upwards with increasing age and the formation of buttresses. In exploitable trees this point is situated at the usual height of measuring the diameter, *viz.*, 4¼ feet; but in very old trees, and in those which possess free growing-room, it is found as high as 12 to 24 feet above the ground.

The increasing width of the concentric rings from bottom upwards is most marked in favourable soils and localities and in trees in the midst of a dense leaf-canopy (*i.e.*, trees with a long bole and a small high crown), and least so in unfavourable soils and localities and in overtopping and, especially, isolated trees. It is also most conspicuous in trees that are growing up vigorously, and this particularly in the upper part of the stem, whereas, on the contrary, in trees pushing up slowly or which have entirely ceased to grow, the width of the rings diminishes from below upwards. In the case of isolated trees with low-spreading branches the rings are of the

same width throughout the entire length of the stem, or may even become narrower from bottom upwards.

Young trees have an absolute form-factor of from 0·30 to 0·35. With increasing age these figures rise to 0·44 and even 0·48; but they ultimately diminish after an advanced age is reached. This decrease occurs in the European larch at the age of 80-100 years, and even earlier in trees grown out in the open. Trees that have developed in isolation always have a low form-factor. In favourable soils and localities the form-factor is higher than in unfavourable ones.

The rate at which the stem expands at different heights is obviously not the same as that at which the diameter increases. The increment of sectional area is greatest at the level of the soil, decreases rapidly upwards for a short distance, then much more gradually up to the beginning of the crown (sometimes even increasing in the vicinity of the crown), and lastly diminishes very rapidly upwards to the top of the crown, where it consists merely of the sectional area of the previous season's shoot. In trees growing in the midst of a dense leaf-canopy, and in those already dominated, the largest increment of sectional area occurs in the upper part of the bole; whereas in isolated trees it is to be found much lower down. In canopied crops growing in favourable soils and localities the increment of sectional area is almost the same throughout the entire length of the stem ; in unfavourable soils and localities and in the case of all isolated trees, whatever the nature of the soil and locality, it steadily decreases from below upwards.

D. Rate of increase of volume.

Increased mass is the result of the co-operation of three factors—increase of height, increase of diameter, and augmentation of the form-factor. In early youth, in spite of the great width of the concentric rings of woody growth, the increment of volume is small ; it reaches an important figure only when the crown has acquired some development, and the stem, by its increased height and girth, presents a sufficiently extended surface for the deposit of new woody growth. After this period the rate at which the volume increases rises rapidly to its maximum. In Europe this maximum is attained at the age of 50-70 years in the case of quick-growing species in suitable soils and localities ; at the age of 100-120 years in the case of slow-growing species under unfavourable conditions ; and at a very advanced age by trees standing out in the open, or situated on high exposed ridges or at

great elevations. Once at its maximum, the annual rate of increase remains more or less steady for some time, after which it declines, but at a less rapid rate than that at which it rose.

The mean annual increment, as a rule, attains its maximum only at a very advanced age, generally beyond that of ordinary exploitability. Even in canopied crops the maximum is not reached by the dominant and overtopping trees before the age of 120-140 years. Trees growing out in the open, and individuals of species which develop slowly during their youth, attain it much later; while in high mountainous regions many trees as much as 300 years old may be found which have not yet entered upon that stage.

5. *General remarks on the growth of the crop.*

The course of development and the accretion of volume in timber crops depends not only on the species, soil and locality, but also on the treatment and system of working adopted. In respect of one and the same species the amount of production is influenced chiefly by the soil and locality, the course of development of the crop by the treatment and system of working. Of the course of growth in crops worked by the jardinage and coppice methods but little is as yet known, but a flood of light has been thrown on the growth of regular crops treated by the uniform method by the labours of the German Department for Forest Research. The remarks which follow refer only to such crops.

A. Natural constitution of stem-classes.

In every crop we can recognise, besides the over-topping and dominant individuals, two lower classes of dominated and overtopped ones, and, if no thinnings have been made, also a fifth class of suppressed stems. The first two classes form what may be called the main crop, the other three the subordinate crop. It is obvious that in the ordinary course of development of the crop fresh stems are constantly passing into the lower classes from the immediately upper ones, and from the main crop into the subordinate one, from which they are ultimately removed by thinnings or natural decay and death. The result is a constant diminution of the number of stems composing the main crop.

The original number of individuals in a crop depends on the manner of its constitution, according as it has sprung up from self-sown seedlings or from artificial sowing (generally executed close), or from transplants (generally put out comparatively far apart). The number of stems diminishes rapidly in youth, less

rapidly in middle age, and still more slowly in old age; rapidly in favourable soils and localities; slowly, but steadily up to a great age, in unfavourable places. At one and the same age more stems stand in unfavourable soils and localities than in those more suitable. A crop of Scotch pine of the best quality contains 1,200 stems per acre at 30 years of age, but only 140 stems 90 years later at the age of 120 years.

This constant and great diminution in the number of component individuals results in a considerable falling off of the increment, the consequence being that both the current and mean annual increments reach their culminating point earlier in the case of the crop than in that of the individual belonging to the dominant or representative class.

Since thinnings and decay and death remove mostly the individuals of the lowest class, many from among the average stems of the crop are constantly pushing themselves up into the highest class, or continuing to remain in the dominant class, while the rest are as constantly going down into a lower class, that is to say ultimately into the subordinate part of the crop. So that the exploitable crop eventually consists for the most part of individuals, which in their youth belonged to the highest or over-topping class. Hence investigations into the course of growth of a crop, by means of measurements and ring-countings made on existing already-exploitable individuals, give the heights, diameters, basal areas, volumes, &c., at various periods, not of the representative or average individuals at those periods, but of the largest class of stems of those periods.

B. Basal area.

According to the universal convention adopted of measuring the diameter at breast height ($4\frac{1}{4}$ feet), the basal area of a crop is obviously *nil* until that height is attained; it then increases rapidly up to middle age, and thenceforward more slowly but steadily up to a great age. The diminution of the rate of increase is very conspicuous in the case of quick-growing or shade-avoiding species, but is comparatively slight in the case of shade-enduring or slow-growing species. Thus the basal area in good crops of the European spruce or silver firs, at the age of 140-150 years aggregates as much as 348 square feet per acre, whereas in the best crops of Scotch pine or beech it seldom exceeds 217 square feet per acre. In inferior soils and localities the basal area, for one and the same age, is considerably less than in good soils and localities in spite of the number of stems being larger. In Germany, in un-

favourable places, the basal area in mature crops is only 130 square feet per acre for pine and larch, and 196-217 square feet per acre for spruce and silver fir. In Germany the basal area of a crop is on an average about 0·5 per cent. of the area covered by the crop; in the best soils and localities the average percentage is 0·8 for spruce and silver fir.

C. Volume.

The volume of a crop, as well as the rate at which it increases, is very small in early youth. The volume then increases rapidly up to the end of the middle age of the crop, after which the rate of increase is much less rapid, but is maintained up to a very advanced period. A complete cessation of increase can occur only when the increment of the growing stems is just counterbalanced by the loss due to decay and death.

The current increment of volume becomes rapidly larger until it attains its maximum in 30-40 years in the case of quick-growing species under favourable conditions, and in 70-80 years in the case of slow-growing species and in unfavourable soils and localities. After reaching its culminating point, it sinks rapidly in places where favourable conditions exist, more slowly where circumstances are not so suitable.

The mean annual increment obviously begins by being identical with the increment of the first year. As the current increment now goes on increasing steadily year by year, as long as this increase continues, and also for sometime afterwards, the mean increment obviously keeps below the figure of the current increment. Ultimately it catches up and gets a head of the latter, and as this goes on steadily declining, it maintains this superiority to the end. The mean annual increment obviously attains its maximum when it becomes equal to the current annual increment, for the continued diminution of the latter must cause it to decline also from that point. As the current increment diminishes only gradually, especially in unsuitable soils and localities, the mean annual increment, after attaining its culminating point, continues nearly at the same level for a considerable period, particularly so in unfavourable places, where this period may extend over several decades.

Chapter VII.

On the compilation of tables of yield.

In yield tables are collected figures representing the course of

growth of different classes of crops that have developed under normal conditions of growth and density. These figures give the volume and increment per unit of area of the crops in question at different ages and under different conditions of growth, and sometimes also the corresponding factors which contribute to the production of volume, *viz.*, number of stems, basal area, and height of crop.

As shown higher up, the course of development of a crop cannot, like that of the individual tree, be deduced by a single series of investigations made at the age of exploitability. The number of stems, the basal area, and the dimensions of the average stem at all previous periods must be known. Hence to trace the course of growth of a given crop it must be surveyed from its earliest youth annually, or at regularly recurring periods, until it becomes exploitable. This method of repeated survey has also been adopted in order to measure the influence of different modes of treatment on crops that in all other respects are similar.

To follow out this system rigidly on one and the same crop through the whole of its life would be an extremely long and slow process. In order to curtail it and obtain the results sought as quickly as possible, several similar crops, under the same treatment but of different ages, are experimented upon, and the various observations made for time to time in the several crops are combined and interpolated together into a connected whole, that is nearly, if not quite, as accurate as if the figures it comprises had been obtained from investigations in one and the same crop from the time of its constitution to its maturity.

There is yet another and still shorter way of obtaining the requisite figures. A series of crops growing under similar conditions of species, soil, locality and treatment, but of various ages differing from each other by as short intervals as possible, is chosen with great discrimination and care, and each crop is measured once for all, the results being tabulated together. Most of the yield-tables hitherto compiled have been obtained by this method, and the results have been proved to be quite correct enough to justify its adoption as often as there is no time to wait for the outcome of the longer and more elaborate methods.

Whichever of the two last described methods is adopted, there are always certain ages for which figures are wanting, and the gaps must be filled up by interpolations which are most conveniently obtained graphically thus:—The various successive ages are marked on a horizontal line, and at these points perpendiculars are raised, the perpendiculars for the ages for which the volumes or

increments are known being made of the lengths corresponding to these volumes or increments, as the case may be. The ends of these perpendiculars being joined by a continuous curve, the lengths of the other perpendiculars up to where they are cut by the curve, give respectively the remaining volumes or increments. The figures obtained for the volumes should be checked by constructing similar curves with the known numbers of trees, basal areas and heights, and obtaining by interpolation the corresponding figures for the other ages. The complete figures obtained for each series should then be compared : wherever discrepancies are found corrections can be easily made. Such a check for the volumes is best obtained by comparison with the figures obtained for the basal areas and heights, the products of which, multiplied by the respective form-factors, will furnish another series of volume figures. The form-factors used may be obtained at the same time as the other information.

The accuracy of yield tables is always more or less uncertain, owing to the difficulty of selecting the experimental crops so that they may be exact counterparts of each other at their own respective ages. The necessary correspondence is best secured by careful and detailed stem analyses in the older crops, in order that the heights of the dominant stems at earlier periods may be more or less exactly ascertained. The experimental crops for these earlier periods should then be so selected that their average heights correspond with the figures thus deduced.

NOTES ON THE UTILISATION OF FORESTS.

THE following notes are, with a few modifications and additions, those dictated to the students at the Imperial Forest School, Dehra Dún. They lay no claim to originality, but follow mainly on the lines of Karl Gayer's classical work on the subject. They are printed in their present crude form, as the multifarious heavy duties of the writer leave him no time for working them up in the manner he would desire. Rather than delay their publication until that problematic date when he will enjoy the leisure necessary for such an undertaking, it has been judged advisable to bring them out at once for two reasons. In the first place, the students will thereby be saved the labour of writing hundreds of pages of foolscap and the tedium of reading the same number of pages of less or more illegible manuscript ; and in the second place, the publication, by rendering conspicuous the many omissions and

shortcomings, will bring together valuable contributions from the experience of others, which will facilitate immensely the ultimate preparation of a good Manual on the Utilisation of our Indian Forests.

E. E. FERNANDEZ.

DEFINITION AND DIVISION OF THE SUBJECT.

In Forest Utilisation, which is a composite art founded on the facts of special experience and the principles of general science, we study the most advantageous methods of collection, conversion and disposal of forest produce, consistent with the strictest rules of forest culture, the most complete satisfaction of our wants, and the securing of the highest possible profits.

The subject naturally divides itself into three main parts :—

I.—Felling, collection, conversion, transport* and disposal of wood;

II.—Collection, preparation and disposal of minor produce; and

III.—Minor forest industries.

PART I.

FELLING, COLLECTION, CONVERSION, AND DISPOSAL OF WOOD.

To be able to utilise a wood crop, we must first of all understand the technical properties of woods and the requirements of the various industries using wood as a raw product, such as carpentry, joinery, &c. Possessed of this knowledge, we must know how to fell, collect, convert and dispose of the wood. We thus have the following divisions of the subject of this Part :—

I.—The technical properties of wood.

II.—Wood-using industries.

III.—Felling and conversion.

IV.—Disposal and sale of wood in the forest.

V.—Management of wood depôts and timber yards.

CHAPTER I.—TECHNICAL PROPERTIES OF WOODS.

The growth and structure of wood have been already studied in detail in the class of vegetable morphology and physiology. There

---

* The subject of transport has very properly been transferred to the Course of Forest Engineering, and will be dealt with in the Special Manual on that Course.

is, therefore, no need to repeat the subject here, even to the slight extent that concerns the present subject. This amount of previous knowledge being assumed, those properties of woods will now be studied on which their utility and the manner of their employment depends. These properties are—

I.—Relative form and size of the main parts of a tree—stems, branches and roots;
II.—Weight;
III.—Hardness;
IV.—Flexibility and elasticity;
V.—Aptitude for fission;
VI.—Strength;
VII.—Loss and gain of moisture and consequent contraction and expansion; seasoning, warping and tendency to split and crack.
VIII.—Durability;
IX.—Combustibility and heating power; and
X.—Defects and unsoundness.

SECTION I.—RELATIVE FORM AND SIZE OF THE MAIN PARTS OF THE TREE.

The main causes of differences in these attributes are—

(i). *Species.*—In the firs and deodar the stem extends right up to the highest point of the tree, and the branches have a comparatively slight development, especially in the case of firs, which possess branchlets rather than branches. Pines and some broad-leaved species, such as teak, simal, resemble firs and deodar up to a certain age; then a true crown, including little or no part of the stem, is formed. All other broad-leaved species (by far the largest majority of them) develop a distinct crown in middle age, many even earlier, especially when growing isolated.

(ii). *Density and relative height of surrounding leaf-canopy.*—It is a universal rule that the denser and taller the leaf-canopy is in which a tree has grown, the larger is the proportion of stem in the tree; and the smaller, in the same measure, the proportion of branch wood, and some times also the mass of wood in the roots. These results are most marked in the case of broad-leaved species. Some large broad-leaved species, such as the mango, if grown isolated, branch only a few feet from

the ground, and the old trees thus consist of a thick short stem dividing into massive, more or less horizontal boughs. Such trees are often, if not generally, shade-enduring. There are several shade-avoiding species, which develop a conspicuously long stem even in complete isolation, *e.g.*, *Hardwickia binata*, teak, *Dalbergia Sissu*, *Adina cordifolia*, *&c.*

(iii). *Age.*—In a canopied crop the toppings at first considerably exceed the quantity of material in the timber portion of the stem. In middle age the proportion of this latter is already very large, and goes on increasing, so that when the trees are large enough to be exploitable the branch wood may constitute only from 8 to 10 per cent. of the entire felled material. It is obvious that the quantity of wood in the roots goes on steadily increasing with age.

(iv). *Soil and locality.*—It is a fact proved by universal experience that the proportion of wood in the stem increases with the favourable character of the soil and locality, whereas the reverse is usually the case in respect of the root portion of the tree.

General.—It is thus evident that owing to the numerous and extremely variable factors which influence the relative development of the roots, stem and branches, it is impossible to arrive at any constant figures, even for trees in one and the same crop. This is especially true in India, where the same tree has often so wide a horizontal as well as vertical distribution. Nevertheless, it would be interesting to start experimental measurements throughout the Empire in order to obtain average figures for our principal species according to well-defined forest regions. A few figures taken from experiments made in Germany will be instructive. The following were obtained by Pfeil and Theodor Hartig in canopied high forest :—

Species.	Timber in trunk.	Branches and toppings.	Wood in roots.	Remarks.
	%	%	%	
Spruce, ..	80–85	8–10	15–25	
Silver fir, ..	80–85	8–10	15–30	
Scotch pine,	72–75	8–15	15–20	
Aspen, ..	75–80	5–10	5–10	Both species with open foliage.
Birch, ..	75–80	5–10	5–12	
Beech, ..	60–65	10–20	20–25	Crown dense and spreading.
Oak, ..	60	15–25	20–25	

In stored coppice, Lauprecht obtained the following percentages for the branch-wood yielded by the stores:—

		50-60 years old.	60-100 years old.	Over 100 years old.
Aspen,	...	40	40	25-29
Birch,	...	35-40	35-44	34-40
Beech,	...	59-60	51	28-40
Oak,	...	58	42	18-25

Since the bole is usually the most important element of production in a forest, its shape and other attributes are obviously matters of the first importance. We shall, therefore, here specially study these attributes. For the stem of a tree to possess its maximum utility, it should be of the largest dimensions attainable, and it should be straight, free from branches, and as cylindrical as possible.

(*a*). *Dimensions.*—The height which a given species can attain depends principally on the suitability of the soil and locality, and most of all on the depth of the soil and the amount of moisture in it. A sufficient density of the leaf-canopy during the stage of rapid elongation is also an important factor. For one and the same age, the diameter will, besides being influenced by the soil and the locality, be proportionate to the amount of lateral-growing room afforded to the crown and the roots when the stage of rapid lateral expansion has set in. This generally precedes by a certain interval the close of the stage of rapid elongation. Hence as regards both dimensions we shall obtain the best results by keeping the leaf-canopy as close as practicable up to the middle age of the crop, when the upward growth has begun to relax, and thereafter by opening it out in proportion to the requirements of the trees.

(*b*). *Straightness.*—The stem may form (i) a continuous line, or (ii) be contorted or present several angles. In the first case it may be straight or curved. If curved, it will be straight in one plane. Such are the crooks and knees of ships, felloes of wheels, &c. Some trees, such as deodar, the firs, *Bombax malabaricum*, &c., form a perfectly straight bole, whether they grow isolated or in the midst of a leaf-canopy; but the rest, which include pines and nearly all broad-leaved species, will grow up straight, only in fully canopied forests, and will even then fall behind deodar and the firs. The soil and the locality, especially depth of soil and the amount of moisture in it, are not without influence on the straight growth of the stem.

(*c*). *Freedom from branches.*—When the lower branches become sufficiently overshadowed by the development of the crown above, they gradually sicken, and die and fall off before they can attain any size, and leave behind knots or permanent scars in the wood of the trunk at their point of attachment. This process is of course accelerated by the presence of a surrounding leaf-canopy, which should, if the fullest advantage is to be derived from it, be continued during the entire period of upward growth, *i.e.*, from the thicket stage to the close of the high pole stage. Thenceforward the opening out of the leaf-canopy, unless it is carried to the point of more or less complete isolation, has no harmful effect on the bole. If the trees are isolated, epicorms may of course appear and render knotty the rings of wood formed thereafter. The strength and abundance of the epicorms will be in direct proportion to the unfavourable nature of the soil and locality for the growth of the species concerned and the unhealthiness or want of vigour of the crown, and in inverse proportion to the age of the trees.

Some species form a more or less long bole even in complete isolation, and are never branched low down even at an early age, as *Hardwickia binata;* while others, at the extreme end of the scale, like deodar in certain localities and when completely exposed on every side, remain branched right down to the ground during their whole life-time.

(*d*). *A cylindrical shape.*—It is obvious that the general usefulness of the stem is in direct proportion to its approach to a cylindrical form. The combined length and upper diameter of a log offer a much safer criterion of value than the mere cubical contents, or the combined length and mean diameter.

Some trees have eccentric or fluted growth. What the causes are, have not yet been fully ascertained. It is certain that the species to which the tree belongs, and the degree of isolation in which it has grown, have a great deal to do with it. The presence of a few large boughs produces an undue width of the concentric rings of wood along the vertical line leading down from each, whereas a tree that has a continuous stem extending up to its summit, and only small but numerous branches distributed all round is placed in the best conditions possible to develop a cylindrical bole.

A conical shape is favoured by growth out in the open. The crown coming down half way, if not lower, the inferior portion of the trunk is thoroughly well nourished, and the concentric layers

of wood formed there are at least as thick as they are higher up; the consequence being the maintenance, and, owing to the growth of the main roots, even the more decided formation, of a conical outline. On the other hand, when a tree has been growing continuously in the midst of a leaf-canopy, the crown is high above the ground, and therefore the inferior portion of the bole is less well nourished than the portion above, the consequence being that the concentric layers of wood are thicker above than below, and the shape of the bole, from being originally conical, becomes more cylindrical every year.

The extent to which the shape of the bole departs from the true cylinder is usually, and with very great convenience, expressed by a factor, which, used as a co-efficient with the solid contents of a cylinder having the same circumference as the girth of the tree at breast-height, gives the true contents of the bole. This co-efficient, which may be termed the form co-efficient or factor, is obviously the ratio between the true contents and the contents of the ideal cylinder in question. In practice it is obtained by measuring a sufficient number of type trees taken from a given class of forest, and representing a given species and a given age or size class. The mean of these measurements is used and the mean co-efficient calculated from it serves to give at once pretty accurately the quantity of timber in any number of trees of that species and age or size class, if we know their several girths at breast-height and the respective lengths of their boles.

Section II.—Weight.

Weight as a quality of wood affecting its employment is usually of only slight importance. Generally speaking, it need be considered only in the case of superstructures when extra strong supports would be very expensive, and in that of portable articles. But although of itself weight does not always possess much intrinsic importance, it nevertheless merits careful consideration, in that many other qualities of the first moment, such as hardness, durability, combustibility and heating power, swelling and shrinking with varying quantities of moisture, &c., are intimately connected with it.

The substance proper of all woods is slightly heavier than water, and its weight does not differ much for the different species. As a rule, it is heavier in conifers than in broad-leaved trees, amongst which the hardest and absolutely heaviest stand more frequently the lowest. It is heavier in young than in old trees.

The main cause of difference in the absolute weight of woods is their anatomical structure. The experiments of Theodor Hartig have established for the European woods the following percentages for the space occupied respectively by the solid wood-substance and the water and air contained in the tissues :—

	Wood substance.	Water.	Air.
The hard woods, ...	44·1	24·7	31·2
The soft woods, including conifers,...	27·0	33·5-31·7	39·5-40·4

For our hardest Indian woods, such as *Hardwickia binata*, iron wood, ebony, &c., we may safely assume at least 50 per cent. as the proportionate space occupied by the solid substance of the wood, the amount of air-space diminishing in almost equal measure.

The denser tissue of the exterior zone of a concentric ring is obviously heavier than the more or less porous tissue of the interior zone. From this it follows (*a*), that in conifers, in which class of trees, as an almost invariable rule, the width of the outer zone remains practically constant, while increase in rapidity of growth bears entirely on the inner zone, the weight of the wood is generally inversely proportional to rapidity of growth ; (*b*), that in broad-leaved species, in which the largest and most numerous pores are found in the inner zone, the weight of the wood is, on the contrary, directly proportional to rapidity of growth, since this last bears entirely on the outer zone; and (*c*), that in all other woods the rate of growth has no influence on the weight of the wood produced in one and the same soil and locality. These rules have, however, to be accepted with some slight reservations, to be presently explained.

What has been said in the preceding paragraph is of course true only when the anatomical structure of the specimens of wood compared is in every other respect the same. But large differences in weight may be caused by different thicknesses and degrees of solidity of the cell-wall, or in consequence of an abnormally slight or great development of the inner or outer zones. So that a narrow-ringed piece of conifer wood or a broad-ringed piece of oak or teak may nevertheless be lighter respectively than a broader-ringed piece of the same species of conifer or a narrower ringed piece of oak or teak. But it is in the case of woods in which the pores are uniformly distributed that the thickness and solidity of the cell-walls exercise the most considerable influence on their absolute weight.

But the relative widths of the interior and exterior zones, the absolute width of the entire concentric ring itself, and the thickness and solidity of the cell-walls and fulness of the cells, are them-

selves merely effects of which the nature and suitability of the soil and locality, and the degree of closeness of the surrounding leaf-canopy, are the causes. These causes are often so powerful, that they may reverse altogether conclusions based on the width of the concentric rings, especially in the case of specimens of wood in which the rings are unusually broad or unusually narrow. In the case of each species, heavy (and also really good) wood is, as a rule, produced in a soil of the proper mineral composition and containing the necessary quantity of moisture, provided that the requisite amount of warmth and light never fails. Where these conditions are wanting, or do not work harmoniously together for the species in question, especially if light is insufficient, the wood tends to become loose-tissued and light. The great influence of light in determining the weight of the wood is unquestioned in respect of solitary and canopy-grown trees. In respect of wood coming from different regions, where the power of the sun's rays is different during the season of vegetation, that influence is proved by the following figures, which have been calculated from data taken from Gamble's *Manual of Indian Timbers*—data which, if not scientifically accurate, are nevertheless sufficiently enough for our purpose :—

	Sun less powerful.		*Sun more powerful.*	
	Average weight of cubic foot.	Number of experiments.	Average weight of cubic foot.	Number of experiments.
Bombax malabaricum, ...	22·3	6	31·5	2
Teak, ...	38·4	131	43·7	43
Pinus longifolia, ...	38·3	3	44	3
Pinus excelsa, ...	29·1	6	32·3	3
Sissu, ...	46·6	102	48·6	13
Terminalia tomentosa, ...	55 5	11	61·4	12
Sal, ...	57·3	209	61·6	27

As said before, the soil affects the weight of wood by the amount of moisture it contains, and by its mineral composition. Excess of moisture for any species in question tends to make the wood spongy. Where it prevails, added high temperature and bright illumination merely increase the width of the concentric rings, without at all increasing the weight of the wood. In the case of conifers growing in wet places, the wood may be extremely light in spite of narrow rings. The effect of the mineral composition of the soil on the nourishment of woody tissue is too well known

to be repeated here. Even an abundance of moisture and free enjoyment of light may fail to produce dense wood in a soil that is poor in the mineral food of plants.

The general conclusion to be drawn from the three immediately preceding paragraphs is that the rule establishing a direct connection between the weight of a piece of wood and the width of the concentric rings composing it, may often be misleading, if these rings are unusually wide or unusually narrow, but generally holds good in all other cases.

The density of wood is influenced in a large measure also by the age of the tree. As said before, the wood substance formed by a young tree is heavier than what is produced by the same tree at a more advanced age, the difference some times exceeding 60 per cent. But it is also an established fact that all trees as a rule form heaviest wood in an absolute sense when young. Thus it is that in young trees there is usually no appreciable difference in weight between the heartwood and the adjacent sapwood; whereas the difference between the weight of this sapwood and that of heartwood formed in later years may be really appreciable. The word "may" is used advisedly, because, although in most species the heartwood is notably heavier than the sapwood, this assertion cannot be generalised into a rule, since the mere circumstance of a difference in the width of the concentric rings, while it may accentuate the original greater weight of the heartwood, may also turn the scale in favour of the sapwood.

In all the foregoing remarks the quantity of water in the wood has been left out of account. In practice we distinguish three states of the wood after it has been felled—(1) when it has been *fresh-felled*, (2) when it has undergone some degree of seasoning before it is removed from the forest (we may use the term *forest-seasoned* in this case), and (3) when it has been *completely seasoned*, that is to say, has lost all the water it can part with under shelter in a dry atmosphere. Fresh-felled wood may for all practical purposes be assumed to contain 45 per cent. of water, while in completely seasoned wood the quantity of moisture varies from 15 to 20 per cent. The proportion of moisture in forest-seasoned wood is, of course, a very variable quantity.

According to Theodor Hartig's experiments the quantity of water in any wood depends on the species to which it belongs. As a rule, the conifers contain the largest quantity, and the hardest woods the least. There are, of course, exceptions to the rule. Thus alder, birch and poplar, all very soft woods, are amongst those which contain least water; while oak, sál and some other hard woods

contain it in abundance. In the case of woods that are naturally impregnated with resins and oils, the difference between the green and seasoned weights is inversely proportional to the quantity of those substances in the wood. The more recently formed wood in a healthy growing tree contains more water than the older portions, and hence the sapwood and the wood in the crown are more full of moisture than the heartwood and the wood of the trunk respectively. Hartig's experiments, already referred to, apparently establish the remarkable fact that the quantity of moisture in the soil has no influence whatsoever on the amount of moisture in the wood of trees grown thereon; at any rate, there is no interdependence between them. Contrary to the general belief hitherto prevailing, every one of the European trees, which, like alder, oak and poplar, delight in wet and even watery soils, are conspicuous by the small quantity of moisture in their wood. Further research is, however, still necessary before any final conclusions can be drawn.

The wood of trees is more full of moisture during the season of rest than during the season of vegetation. Hence the green weight of wood depends also on the time of the year at which it is felled. But as the wood contains most reserve matter while the trees are resting, even the dry weight of wood is dependent on the season in which it is cut.

It is obvious, as said before, that resin and oils impregnating wood increase its dry weight. For this reason, in resiniferous trees the wood in the interior of the stem is heavier than the outside layers; and in conifers, the narrow-ringed wood of the branches, and in pines and deodar, also the resin-gorged wood of the roots, is heavier than the wood in other portions of the tree. In conifers the outer zone of each ring is richest in resin, and hence the broader-ringed a piece of conifer wood is, the smaller will, as a rule, be the proportion of resin in it, and consequently the less its weight. But besides resin and oils, wood may contain inorganic salts, such as calcium carbonate, potash, magnesia, &c., silex, and other substances, which add their own weight to that of the original substance of the wood. Long immersion in water, and especially floating, dissolves out these various substances and makes the wood very appreciably lighter.

In one and the same tree the weight of the wood is, as a rule, more or less different, according as it is taken from the roots, or from the lower or upper part of the stem, or from the centre of the stem, or from near the bark or from the branches. In the stem this difference is in a great measure due to a difference in the

width of the concentric layers of wood and in the relative width of the inner and outer zones of those layers in its different portions. The wood of the branches is generally heavier than that of the stem, but in the case of small twigs there is, according to Nördlinger, very little difference even from species to species in the green weight of the wood, the figure for all species taken together ranging from 57 to 66 lbs. per solid cubic foot. The wood of the roots is the lightest of all. But from this general rule must be excepted (i) that of the crown of the roots, which is frequently remarkably heavy, and (ii) that of conifers producing resin in abundance, the wood of the roots of which sometimes weighs as much as 65 lbs. per cubic foot. According to Nördlinger the weight of the wood is, in all species, proportionate to the thickness of the roots from which it is taken.

Knotty growth, in whatever part of a tree it occurs, increases the weight of the wood. The new growth of wood surrounding or covering healthy wounds is also heavy.

For convenience sake we may establish six classes or degrees as follows in respect of weight :—

I. Extremely heavy.—Average weight of cubic foot = 70 lbs. and upwards.

Hardwickia binata, ebony, *Pterocarpus santalinus*, *Mesua ferrea*.

II. Very heavy.—Average weight of cubic foot = over 60 and up to 70 lbs.

Sal, sundri, iron wood, khair, sandal wood, *Terminalia tomentosa*.

III. Heavy.—Average weight of cubic foot = over 50 and up to 60 lbs.

Sissu, blackwood, satin-wood, babul, box, *Pterocarpus Marsupium* and *indicus* (Padouk).

IV. Moderately heavy.—Average weight of cubic foot = over 40 and up to 50 lbs.

Schima Wallichii, mango, *Hopea odorata*, *Anthocephalus Cadamba*, walnut, haldu, teak, mahogany, *Lagerströmia Flos-Reginæ*. jack.

V. Light.—Average weight of cubic foot = over 30 and up to 40 lbs.

Michelia Champaca and *excelsa*, toon, *Gmelina arborea*, *Pinus longifolia* and *excelsa*, deodar, poplar, willows.

VI. Very light.—Average weight of cubic foot = 30 lbs. and under.

Simal, *Sterculias*, *Ailantus excelsa*.

(*To be continued*).

II. Official Papers.

NOTE ON HIMALAYAN FODDER GRASSES.

The gradual changes which determine the character of the flora at different zones on the Himalayan ranges is clearly exemplified in the case of grasses.

On ascending towards the higher elevations we are struck with the resemblance of the vegetation to that of the more temperate regions of the world, and amongst the grasses we find many kind botanically identical with such as constitute some of the finest pasture lands of Europe.

A complete list of all the grasses growing on the Himalaya would include a large number of plains species, many of which extend for considerable distances throughout the warmer regions of the principal valleys.

The high elevation species, *i.e.*, those which occur at elevations of 8,000 feet above the sea, belong to the following genera :—

1. *Panicum* (cult.)
2. *Setaria.*
3. *Pennisetum.*
4. *Hierochloe.*
5. *Alopecurus.*
6. *Stipa.*
7. *Oryzopsis.*
8. *Milium.*
9. *Phleum.*
10. *Sporobolus.*
11. *Agrostis.*
12. *Calamagrostis.*
13. *Deyeuxia.*
14. *Aira.*
15. *Deschampsia.*
16. *Trisetum.*
17. *Avena.*
18. *Danthonia.*
19. *Phragmites.*
20. *Cynosurus.*
21. *Kœleria.*
22. *Catabrosa.*
23. *Melica.*
24. *Briza.*
25. *Dactylis.*
26. *Poa.*
27. *Graphebhorum.*
28. *Glyceria.*
29. *Festuca.*
30. *Bromus.*
31. *Brachypodium.*
32. *Lolium.*
33. *Agropyrum.*
34. *Triticum* (cult.)
35. *Hordeum.*
36. *Elymus.*
37. *Arundinaria.*

With the exception of Nos. 2, 3, 5, 6, 10, 17, 19, 26, 32, 34 and 35, none of the above have representatives in the plains. All of them, except Nos. 7, 13, 27 and 37, are represented in Europe, and in many instances by the same species.

Very little appears to be known concerning the actual feeding value of the high elevation species individually, though taken as a whole they are undoubtedly more nutritious than those which inhabit the plains.

The following list includes, at any rate, the majority of the more important fodder-yielding kinds, which are found above 8,000 feet :—

(1). *Panicum.*—The only species occurring above 8,000 feet is *cheena* (*P. miliaceum, L.*). It is grown by the villagers as a rainy season crop at various elevations up to 11,000 feet. It yields a very nutritious fodder in the green state.

(2). *Setaria viridis, Beauv.*—A nutritious grass, common on the inner drier ranges, but chiefly in the neighbourhood of cultivation.

(3). *Pennisetum flaccidum, Griseb.*—A common weed on cultivated ground up to 12,000 feet.

(4). *Hierochloe laxa, R. Br.*—Plentiful on the higher pastures up to 15,000 feet. It emits in the process of drying a perfume like that of the English hay-scented grass, *Anthoxanthum odoratum. Hierochloe borealis* of West Europe, and *H. redolens*, inhabiting the mountains of Australia and New Zealand, have the same properties.

(5). *Alopecurus pratensis, L.* (Meadow Fox-tail grass).—Common up to 11,000 or 12,000 feet. This is one of the best of the English fodder grasses.

(6). *Milium effusum, L.* (Millet grass).—Not uncommon in shady forests up to 12,000 feet. In Europe it is said to be relished by cattle, and the grain can be used like millet.

(7). *Phleum alpinum, L.*—Common up to 15,000 feet.

(8). *Phleum pratense, L.* (Timothy, or Cat's-tail grass).—A very important fodder grass, and highly esteemed as such in England.

(9). *Agrostis alba, L.* (Frorin or white Bent-grass).—Has been found up to 13,000 feet, but is more frequent at about 7,000 or 8,000 feet. This grass is valued in England for mixing with other kinds of grasses. Several other species of *Agrostis* are to be found at various elevations, up to 15,000 feet.

(10). *Trisetum subspicatum, Beauv.*, 12,000 to 17,000 feet.—An abundant constituent of some of the higher pastures.

(11). *Avena pratensis, L.* (Meadow Oat-grass).—Reported to be a good fodder grass in Europe, especially for dry soils.

(12). *Avena pubescens*, *L.* (Downy Oat-grass).—Valued in Europe as a good grass, yielding fodder early and plentifully. There are other Himalayan species, but nothing definite is known about them.

(13). *Danthonia kashmiriana*, *Jaub.*—Plentiful above 11,000 feet, growing in large tufts. The *paharis* (hill-men) consider this to be a good fodder grass. Some of the Australian *Danthonias* are highly esteemed for fodder in that country.

(14). *Kœleria cristata*, *Pers.*—This is a common grass at or about 8,000 feet, extending often to 12,000 feet, on open dry ground. In Europe it is reckoned as fairly nutritious.

(15). *Dactylis glomerata*, *L.* (Cocksfoot grass).—Plentiful at about 8,000 feet. It is greatly valued both in England and America as being one of the best pasture grasses.

(16). *Briza media*, *L.* (Quaking grass).—Not uncommon on the higher pasture lands up to 13,000 feet. A familiar ingredient in English pastures, especially on a dry soil. It is said to be liked by horses, cattle, and sheep.

(17). *Poa pratensis*, *L.* (English meadow grass).—Common between 11,000 to 12,000 feet on the Himalaya. This grass is much valued as an excellent fodder grass in England, and also in America, where it is known as the "Kentucky Blue grass."

(18). *Poa trivialis*, *L.*—Is found at about the same elevation as the latter. In Europe it has been well tested, and is found to be an excellent grass both for pasture and hay. Several other species of Poa are found at various elevations of the Himalaya up to 16,000 feet, some of which, when better known, may possibly be found to equal in value the two kinds above mentioned.

(19). *Graphephorum nutans*, *Munro* (Vern. *joari*).—Considered by the *paharis* (hill-men) to be a good fodder grass. Is found up to 15,000 feet.

(20). *Festuca ovina*, *L.* (Sheep's fescue).—Common up to 15,000 feet. It is an abundant constituent of much of the pasture land in England, together with *F. duriuscula*, *L.*, which is also found on the Himalaya at about the same elevation.

(21). *Festuca elatior*, *L.* (Meadow Fescue).—This grass is much used in Europe for fodder, and is considered by some to be superior to Timothy, and even Fox-tail grass, in nutritive qualities. Many other kinds of Fescue occur on the Himalaya.

(22). *Bromus asper*, *Murray* (Rough Brome grass).—Has been gathered at elevations up to 12,000 feet. Recommended in Europe for wooded localities. Of the other species of *Bromus* occurring on the Himalaya, *B. mollis* and *B. tectorum* are natives of Europe.

Several of the plains species are to be found on the lower slopes of the Himalaya, many of them extending up to the fringe of the temperate region. It is from these, chiefly, that the supplies of fodder required for horses and cows at the several hill stations are procured. The more important kinds are included in the following list :—

Isachne australis.
Panicum colonum (Sawánk).
Panicum frumentaceum (cultivated).
Panicum helopus.
Panicum sanguinale.
Setaria italica (cultivated).
Zea Mays (Indian corn).
Arundinella nepalensis.—This species is largely represented in the bundles of grass supplied for horses and cows at Simla.
Heteropogon contortus (Spear grass).—Should be cut early, before the spears have developed.
Chrysopogon serrulatus.—Largely used as fodder.
Anthistiria anathera.—A good fodder grass, and largely used.
Anthistiria ciliata (Kangaroo grass of Australia).
Apluda aristata.—Abundant and largely used as fodder.
Sporobolus dianda.
Sporobolus indicus.
Cynodon Dactylon (Dúb).
Eleusine ægyptiaca (Makra).
Eleusine Corocana (Mandwa).
Eleusine indica.
Poa annua.—Nutritious; common in Europe.
Lolium perenne (Perennial Rye-grass).
Triticum sativum (Wheat).
Hordeum vulgare (Barley).

Report by J. F. DUTHIE, *Director, Botanical Department, Northern India.*

ON THE GROWTH AND PREPARATION OF RAISINS.

[*Compiled from practical experience on Vineyards in California.*]

THE varieties of grape required for raisins differ widely from those suitable for wine. The former should be large, thin-skinned and fleshy, with little juice, the size of the latter is immaterial, provided that they are extremely juicy. The cultivation of the vineyard in both cases is identical, but to make the description of raisin

preparation complete in itself, and, therefore, of more use to interested readers, the various modes practised will be described.

A site should be selected in a suitable soil, light red and light volcanic soils being the best, and care should be taken to avoid the localities where fogs prevail—rich bottom lands with water close to the surface, and sites where the rainfall is deficient: in the former, the grapes will be watery and sour; in the latter, they will be lean.

The ground should first be ploughed, perhaps twice, with a heavy plough, and then harrowed, and either rooted vines, which bear earlier, or cuttings, which are more economical, should be planted. In the latter case, the cuttings taken from not too young a vineyard, and only one from each cane, are preserved by being laid horizontally with sand in a trench, and mounding the earth over them, to exclude light and air, with drainage, if necessary. This process is termed "Heeling in;" and should it be desirable to keep the upper parts unburied, the trench should be sufficiently deep to permit of the covering of the whole of the cutting except the top bud, and the bundles of cuttings should be opened that the sand may envelope them all, a cover of common boards being finally placed over them. The length of cuttings varies; but the shorter the cutting, the more perfect the root system and the earlier the bearing, 16 inches being an average length; the cut should be made close to base of lowest bud.

In February or March at the latest the slips should be removed and planted out in the vineyard in long parallel rows at distances of 8 feet or 10 feet apart on the square. The holes are made either with a crowbar or a dibble provided with a cross bar fixed at the height necessary to make the required depth of hole. A little water being poured in, the slip is inserted and the hole well filled in with earth, care being taken to leave no space between the bottom of the hole and the bottom of the slip. Should the lower end of the slip not be in contact with the bottom of the hole, the plant will mildew and become rotten.

The whole vineyard when planted out is well irrigated, and then left without further attention, and all that is necessary during the first year is frequent cultivation (*i.e.*, grubbing) between the rows to keep down the weeds, the removal in spring of any suckers which form near the root, and pruning in the month of December. This last operation in the first year will be trifling, but all growth must be removed except one shoot, the ordinary rule being to leave one shoot for each year's growth.

In the second year the same operations will be needed, the

shoots in the pruning season being cut off, with the exception of two, in accordance with the above rule. In the third year the vines begin to bear, perhaps sufficiently to cover the expenses of cultivation of that year; in the fourth the produce will be still greater, and in the fifth year the vineyard will be in full bearing, when a crop of at least five tons per acre may be expected. It is possible that a small crop will be obtained even in the second year.

The agricultural operations of cultivating, suckering and pruning are of course exactly similar in each year. During spring and early summer the vines should be kept free from suckers and all non-fruit-bearing wood; summer pruning is not good, this operation being performed in winter to preserve the symmetry of the vine by leaving no long projecting points, and reserving enough short-pruned points, say from 6 to 10 of the most vigorous canes, to provide the necessary 15 or 20 fruit-bearing canes of the following season.

If irrigation is required, the vines may be irrigated heavily in winter, but not in summer, especially not in early summer when in blossom, which would thereby be caused to drop off. One great advantage, however, of vine cultivation lies in the fact that but little water is needed, except on first planting, and thus the most suitable sites are to be found on the outlying spurs of high mountain ranges, where gravels and light loamy soils prevail.

Occasionally, when any variety is found unsatisfactory, grafting is resorted to for the introduction of a better grape in preference to re-planting. The operation is performed as follows:—Preferably in March, but even as late as May, the ground about the vine should be dug away until a smooth place upon the stem is found. At this point the stock is cut off smooth, and a scion inserted in a cleft, the scion having two eyes on it, and being cut wedge-shaped to better ensure success. This is now inserted carefully in the cleft to fit, as the inner bark or liber is very thin, and the success of the operation depends on a perfect junction of the stock and scion. If the stock is strong enough to hold the scion firmly, no bandage is required; if not, the scion should be secured by a ligature applied evenly and firmly. The earth is then pressed firmly round the cut, and fine soil heaped up to the top of the scion, and the stock should be frequently examined and all suckers removed.

Careful cultivation (*i.e.*, grubbing) frequently repeated, especially after rain or irrigation, is necessary to ensure good crops of grapes on the following principle:—The hardened soil and the rapidly springing weeds draw up the moisture retained in the soil

at a little depth as in a reservoir, which moisture is then evaporated by the action of the sun. The soil, however, being pulverized by the cultivation acts as a mulch to retain this moisture in the soil for the benefit of the vines.

Wherever vineyards are subject to mildew by excessive moisture in the air, as in the vicinity of the sea coast, sulphuring is absolutely necessary. The operation is performed thus: sulphur is sprinkled on the vines in the proportion of half an ounce to each vine early in the morning before the dew is off the leaves, and before the leaf or blossom has fully developed, and again when the grape has fairly set, in order that the woody interstices and ground at base may hold the volatile sulphur to give off during the season, and thus destroy the spores and germs floating in damp atmospheres to the injury of the plants. It can be applied either by means of bellows, or by the following utensil:—A tin cup 6 inches deep, 3 inches or 4 inches in diameter, with a tight-fitting cover and a fine brass gauze soldered on to the bottom, with the addition of a strong socket midway in the side of the cup, and at an angle, to receive a wooden handle 3 feet long. One man can sulphur five acres in a day, using 10 to 20 lbs. of sulphur per acre.

The mode of cultivation above described, which is that ordinarily adopted in California, and is perhaps practically the best, produces vines with strong stocks, carrying ultimately from 8 to 10 primary and secondary branches. They resemble in shape ordinary currant bushes, though tending more to lateral growth, attain a height of 4 feet or even 6 feet, and are loaded with grapes.

Another mode of training, but seldom adopted, is as follows, and may be termed "Layer Training":—In March, cultivation is commenced with a shovel plough, the ground being ploughed first one way and then crosswise within an inch of the vines, which have already been planted as described. This is done twice a month till the end of July. When the buds begin to grow, the stronger are selected and the weaker rubbed off, those nearest the ground being the best. In autumn two strong lateral branches are left near the ground for layers, and one good healthy cane for the main vine, which last is cut back to two buds at the end of December, or beginning of January.

In the second year, in February or March, all sprouts are broken off except the two above-mentioned, and the ground ploughed with a shovel plough 3 feet more in width on both sides as summer fallow for new layers. In July or August the tops of all the vines are cut off to 5 feet or 6 feet above ground, care being taken to

preserve choice cuttings, and the main cane is cut back late in the autumn to two buds, all lateral shoots on the layer branches, except two or three near the ends, being removed, the layers being allowed to grow till they are 6 feet in length, when they are to be laid down to make additional rows on each side of old row. In December pruning is performed, two vines having been raised on each stem, the most feeble one is cut off, and the other left to the length the planter wishes to raise his vine stem.

In the third year, the ground being well prepared in March or just before the vines begin to grow, start from every vine of each row two layers on each side of the row, carrying them 4 feet in a trench made by pressing a broad spade into the ground to the depth of 9 inches, and moving it backwards and forwards. The ends of the layers should now be turned up, letting them protrude from the earth high enough to bring two or three buds above ground. All the buds of the layers, save those at the end, and two or three at the bend where it is to take root, should be rubbed off to prevent their sprouting between the rows; and these layer heads should be cultivated in the same way as the original standard vines. About 2 inches below the lowest bud, where the layer is bent to form the new vine, cut a slit an inch long on the underside of the shoot upward to the middle of the layer, breaking off all surplus suckers. There are now three stems on the main stem, which should be cut back to within three buds from the body, and the bud nearest the body should be rubbed off. Prepare the borders in the fourth year 4 feet each way for another course of layers from the canes made from the layers of last year's growth, cultivating and pruning as before. In the *fifth* year make one row of layers from each of the two layers of last year's growth; plough to the width of 5 feet and prune as before. In the *sixth* year plough over and subsoil the summer fallow of last year, and extend the layers 4 feet each way.

A third method is that of trellis-training, which is perhaps more suited for ornament than commercial profit, and is therefore better suited to the wealthy man. For this system of training the cultivation may be as described above up to the second year, when the trellis should be erected. Trellises are of various kinds, but whatever kind of training is adopted, the principle of rearing a strong stock, supporting a limited number of dependent branches to direct the strength of the vine to the production of numerous clusters of the finest grapes, should be carefully kept in view.

There are also different methods of pruning. That detailed above is the ordinary method, performed either with a knife or a pair of

shears; but the following method advocated by a Frenchman seems worthy of consideration. The vines should be divided into three classes :—

(1). Those with internodes at short distances from one another.
(2). „ „ „ „ middling distances.
(3). „ „ „ „ long distances.

The first require the short cut, the second the middling, and the third the long. Vines of different node-distances should not be planted together, for the wider-noded being more vigorous will impoverish the nearer-noded. Attention should, therefore, be paid to the size of the cuttings to be planted, *i.e.*, long cuttings from long-noded vines, short cuttings from short-noded ones. In short-noded vines, the fructifying branches are formed from the first two or three nodes, are safely fertilized, and the seeds arrive at full maturity, but *only if pruned short*, for with long pruning the fruit will remain imperfect on the branches from the first few nodes. Vines with nodes of middling length produce fruitful branches at the third or fourth node; a short cut would remove such fructifying shoots, and to prune them too long would affect them in the same way that long pruning affects short-noded vines. Long-noded vines fructify at the sixth or seventh node, sometimes at the tenth, and should therefore be pruned long.

The last operation connected with the vineyard is that of picking, which for wine grapes calls for no remarks, the grapes being merely picked, thrown into boxes, and carried to the waggon; but in the case of raisin grapes some care is required. The grapes should be fully ripe, the berry large and uniform, with bright bloom, rich and unbroken color, bluish, but never red, the latter colour being due to incipient decomposition; the skin thin and delicate but strong, the pulp full, uniform and clearing freely from the skin; the flavour rich, vinous, aromatic and delicate; the seeds few, small and hard. In picking, the bunch is held by the stem for severance with a knife, and all imperfect berries are at once removed. The clusters are placed carefully in baskets and carried to the drying ground. This is usually placed centrally in the vineyard, and is nothing more than a long earthen platform or floor which may or may not be carefully prepared. Usually it is merely one of the paths roughly levelled, but it would probably be advantageous to level and beat the surface hard with rammers after pouring water on it, of course removing all stones and grass. In Spain these floors are composed of slag mixed largely with gravel.

The grapes being brought in on picking are first sorted into

grades and then placed on shallow trays (3 feet long by 2 feet broad and 1½ inches deep) made of laths; all imperfect berries being removed should such have escaped observation in picking. The trays are ranged side by side along the floor, and the grapes left exposed to the rays of the sun until half dried, which will be in about 12 or 14 days. They are then turned early in the morning by placing an empty tray on a full one, and reversing both, and this turning is repeated as required for two, three or four weeks, when the bunches will be fully dried, and will be reduced to one-third of their original weight, the allowance being roughly 3½ lbs. of grapes to 1 lb. of raisins. If the trays are placed at an angle of 30°, they receive a temperature 10° higher than when placed flat, and thus the drying process is materially hastened.

The raisin maker is guided by the appearance, feeling and taste as to the proper condition of the curing and its completion.

The drying process being carried out in the vineyard, it is necessary to protect the grapes from injury by rain or dew by an awning, of which one pattern is the following:—Posts are driven at intervals of 4 feet on each side of the floor, slotted to receive wires carrying the awning by means of rings. The awning is raised or lowered by two end pieces carrying the ends of the wires, moved up and down the two end posts at each end, and a ridge is formed in the centre by wire fastened to short stakes driven into the ground, in order that the awning when lowered may be a pent roof for the protection of the grapes. In the morning the end pieces being raised, the curtain is simply run along to one end, the slots in the posts admitting freely of this arrangement. Another simple plan would be to drive posts as before at intervals of 4 feet, fixing light frames in the manner of ordinary swing looking-glasses in the intervals. The frames would be fitted with canvas blinds, and at night each pair of opposite frames would be lifted over to form a pent roof, being held in position by a bolt. In the morning they could be removed to admit of the free exposure of the grapes to the sun. The intervals of the breadth of the posts would be covered with light wooden shutters hinged to the posts.

When the raisins are fully dried, they undergo a process termed sweating to bring them to a uniform appearance and colour, and to make the stems pliant, being placed in sweat boxes a little larger than the trays, 8 inches deep and holding 130 to 140 lbs. The sweating, however, can be done equally well in the trays, if filled and placed in an air-tight room, or an artificial drier may be advantageously used. On the completion of the sweating, which is known by the appearance, the raisins should be weighed and

sorted into two grades, the most perfect bunches being placed on top of each layer, but a layer should be faced only with such bunches as are to be found in that particular grade of fruit.

Another method of curing is as follows :—The grapes are not picked before the middle of October or even November, up to which time they continue to improve, not only elaborating the sugar by chemical changes, but becoming thinner in the skin, and, as they also continue to fill, making a heavier raisin. The disadvantage is that the leaving of the grapes on the vine so late increases the difficulty of drying on account of fogs and rain, for this process will not be completed before the beginning of January.

In packing, the raisins are taken on trays to the packing-house, and softened either by direct sprinkling, or by wetting the walls of the room, or by the introduction of a jet of steam. The sprinkling is done overnight by a watering pot with a fine rose, but only when the raisins are extraordinarily dry. Wetting the walls or treating them with steam are preferable when these methods are sufficient. A third method is in oil. The grapes are dipped in a warm solution of lye, rinsed in warm water, and then dipped in warm water having a film of oil on the surface. The bunches are then spread on trays to dry. Thus treated, the curing takes less time than in the ordinary way. Care must be taken that raisins when packed are not moist enough to heat after packing. They are usually packed in 20-lb. boxes in layers of 5 lbs. each.

The following varieties of grapes are considered to be those best suited for raisins :—White Muscat (except where fogs prevail), Muscatel, Gordo Blanco, White Malaga, Faher Zagos, Seedless Sultana.

As a fit conclusion to this article, estimates of the returns from a vineyard both in grapes and raisins are appended ; these are given in American dollars, as it is impossible to assume that the same prices would hold in India. They will, however, show clearly the profitable nature of the industry ; for, except at the outset, prices would undoubtedly be cheaper, whilst the enormous demand would ensure profitable returns.

Estimate of the cost of cultivation of, and probable returns from, a vineyard of 20 *acres.*

FIRST YEAR.

Cost of land (20 acres) with water-right, at $ 125 per acre, ...	... $ 2,500
Ploughing and harrowing, $ 2-50 per acre,	... „ 50
Carried over,	... $ 2,550

Brought forward,	...	$ 2,550
17,000 cuttings, at $ 2 per 1,000,	... ...	„ 34
Planting cuttings, at $ 4 per acre,	... ...	„ 80
Irrigating first time, $ 1-50 per acre,	... ...	„ 30
Ploughing vineyard twice, at $ 3 per acre,	...	„ 60
Cultivating twice, at 60 cents,	... ...	„ 24
Hoeing once,	... ...	„ 10
Expense for First Year,	...	$ 2,788

Second Year.

Pruning, $ 1 per acre,	... ...	$ 20
Irrigating, $ 1 per acre,	... ...	„ 20
Ploughing twice, at $ 3 per acre,	... ...	„ 60
Cultivating three times,	... ...	„ 36
Hoeing,	... ...	„ 10
Total for Second Year,	...	$ 146
If staking of vines desired, $ 10 per 1,000	...	„ 170
Total for Second Year,	...	$ 316

Third Year.

Pruning, $ 2 per acre,	... .	$ 40
Irrigating twice, $ 2 per acre,	... ...	„ 40
Ploughing twice $ 3 per acre,	.. ..	„ 60
Cultivating three times,	... ...	„ 36
Hoeing, suckering, replacing stakes,	... ...	„ 20
Total cost Third Year,	...	$ 196

Expenses.			*Returns.*		
First year,	... ...	$ 2,788	2 tons per acre, at $ 15 per ton,		$ 600
Second year,	... ...	„ 316	3 tons per acre, at $ 15 per ton,		„ 900
Third year,	... ...	„ 196	5 tons per acre, at $ 15 per ton,		„ 1,500
Fourth year,	... ...	„ 196			
Fifth year,	... ...	„ 196			
Total Outlay (exclusive of living),	... ...	$ 3,692	Total Return,	...	„ 3,000

Estimate of cost of, and profits from, Raisin Culture.

Assuming that the land has been bought, and starting with one year old vines, total expenses for first year *per acre*:—

680 roots, 1 year old, 2 cents each, ...	$	13	60	0
Planting and care of same, ...	„	30	0	0
Water, ...	„	3	50	0
Staking and incidentals, ...	„	10	0	0
Total for First Year, ...	$	57	10	0
Labour and water, second year, ...	$	25	0	0
Labour and water, third, fourth, fifth and sixth years, ...	„	100	0	0
Trays and sweating boxes, ...	„	88	0	0
Expenses of picking and packing,... ...	„	390	0	0
Total Expenses (less living and cost of land),	$	660	10	0

Yearly Returns per Acre.

Third year,	50 boxes per acre, $ 1-60,	...	$	80
Fourth year,	150 „ „ ...	...	„	240
Fifth year,	200 „ „ ...	...	„	320
Sixth year,	250 „ „ ..	...	„	400
	Total Returns in six years,	...	$	1,040

A bearing vineyard, three years' old, realizes from $ 225 to 500 per acre, and when in full bearing probably $ 800 per acre.

A. C. LAWFORD,
Exec. Engr., P. W. D., Madras (Retd.).

DOVER COURT,
Near Harwich,
April 15th, 1889.

ON THE CULTIVATION OF THE ORANGE AND OTHER CITRUS TREES.

THE soil best suited for the cultivation of the orange and citrus trees in general is a rich sandy loam with good natural drainage and sufficiently deep to give the utmost freedom for the development of the roots. If a hard sub-soil exist at no great depth, the

trees will flourish at first, but will die away in a short time. The orchard should have a southern aspect, plenty of water and comparative freedom from frost and wind. Heavy clayey soils cause the development of a tap root, and light sandy loams develop both a tap root and an abundance of fibrous roots.

There are three methods of raising citrus trees—from seed, by budding, and by grafting, the last being rarely adopted. Seedlings have the advantage of standing the cold better than budded trees ; but budding on seedlings is the process most generally adopted, the object being to raise certain particular kinds of fruit that may be desired. In either case the seedlings are raised in nurseries in the following manner :—The seeds, those of the Tahiti orange being considered the best, should be washed out through a sieve (the pulp being rubbed through) and spread out in a cool place to dry partially, but not to become too dry before sowing. The ground should be ploughed deep or trenched, and the beds made level or nearly so, with a space of a few feet between each two adjacent beds. These should be moist when the seed is sown, and the surface raked up loose, the seeds being pressed into the earth and covered with an inch of soil. After sowing, the beds should be irrigated in the evening rather than in the morning, and the young plants should be protected from frost and sun during growth. Land well cultivated the year previous to that of using it for a nursery is preferable to new ground or ground covered with weeds. It should be pulverized deep and made even for a ready flow of water. Sometimes water is used for levelling, sometimes a wooden leveller drawn by a team of horses.

If the orchard is to be of seedlings, those of vigorous growth from two to four years of age are selected, full of sap at the time of setting, not making a vigorous growth, but just about to start a new growth. The ground being ploughed to a depth of 16 inches or thereabouts, and levelled for irrigation, should be staked and holed. To stake out the lines of trees, the simplest plan is by means of ranging poles and a chain, with the distances apart marked on it, and, this being done, the holes should be made somewhat larger than the roots will fill to receive a small quantity of well-rotted manure, which should be mixed with earth, and covered with a layer of surface earth to prevent the contact of the roots with the manure.

For transplantation the trees are prepared thus :—All or nearly all the branches should be cut off close to the body of the tree, or if any be left, such as are distributed about the trunk will form a suitable top, and these should be cut off within a few inches of the

trunk ; the upper part of the trunk should be cut off so low that the remaining part will not need staking even after the formation of a new head. As this operation checks the growth, it should be performed whilst the tree is in the ground, about two weeks before removal. The tap-root should not be cut long, as in deep ground, where it is cold, it dies before the tree can fasten sufficiently to nourish it. A trench should now be dug along one side of a row, cutting the tap-roots to the desired length, and throwing in a shovelful of earth to prevent the soil from breaking and falling away, and the tree should be cut out with a ball of earth round the roots made circular and smooth. When loose, it should be lifted carefully, the lower end being placed at the centre of a piece of sacking, the four corners of which should be brought up to the top of the ball and tied fast with a piece of tarred rope. If the tap-root project below the ball of earth, a hole should be cut in the sacking for it. For large trees a grout of clay is used to coat the roots immediately they are dug out, and they are then packed in damp straw.

In setting, bagged trees may be carried to the field and deposited in the holes, but if not bagged they should be handed as wanted, whilst two or three men set them. The hole should be filled evenly from bottom to top, the roots of unbagged trees being straightened out, and the earth pressed well around and amongst them ; all bruised roots should be cut smooth before setting, and the earth around well packed. The side towards the south in the nursery should be set towards the south in the orchard ; and the planting of the orchard being complete, the trees should be left alone as much as possible during the first year.

In the case of budded trees, the process of transplanting is the same, the budding being effected in the nursery and the trees planted out at the proper age as described. Sometimes, the seedlings are transplanted in the nursery, then budded, and finally planted out, the object being to get rid of the tap-root. The process of budding practised is as follows :—Late in the autumn, if free from frost, or in the spring and at new moon in preference, a slit should be made in the selected stock vertically, and not exceeding the length of the bud, with a horizontal cross cut at the top to admit the bud, which is then neatly inserted, the lips of the cut being then neatly brought over it and fixed by binding with silk. Some little care is also required in cutting the bud off its stock. When the buds have started, the stocks should be cut off a few inches above them.

The agricultural operations connected with an orchard thus

planted out are—cultivating, irrigating, and pruning. In cultivating, the soil in the intervening spaces lengthwise and between the trees is well broken up by means of a cultivator or light plough, drawn by a single horse or team, to keep the ground quite free from weeds, and to admit the air to the roots of the growing trees, the fertility of an orchard greatly depending on its careful cultivation. This operation is specially necessary immediately after irrigation, by which the surface is caked, and thereby the circulation of air obstructed, and is usually performed at least twice a month. The principle involved in the necessity of good cultivation is this :—The sun acts as a lamp, a hard surface and growing plants resembling the wick, and the soil at some depth as a reservoir. The crust of the soil and the plants exhaust the water in the soil by capillary attraction, but by cultivation the hard crust favourable to this action is broken up and the plants are removed. The loose soil now forms a mulch to protect from evaporation the water stored in the soil.

Irrigation is practised in various ways. An orchard is always selected to be under the command of an irrigation ditch from which an ample supply of water may be obtained. In some cases the water is not allowed to touch the trees, which derive their supply from the moisture of the surrounding soil ; in others small temporary banks are raised between one or more rows of trees, dividing the orchard into compartments, and the water, being admitted, floods first the upper compartments and then the lower for the whole length of the orchard. This operation is carried on in successive compartments over the whole breadth till all the soil is well saturated. A third method is to cut a small channel along the length of the trees with a small circular trench around each tree ; the water flowing in from the main ditch into the small subsidiary channel running lengthwise, and from it into the circular trenches around the trees. This system has the advantage of economy of water.

Pruning is the most scientific of all the operations connected with an orchard, and calls for the most forethought and judgment. The objects of pruning are :—

(1). To shape the tree properly.
(2). To remove decayed or useless branches.
(3). To admit light and air into the interior of the tree.
(4). To promote growth after severe cold weather.

Citrus trees require a different treatment from deciduous trees, the former making several growths *(sic)* in a year, the latter a regular growth. Proper attention should be given to young trees to start

them properly, especially if budded. The pinching back process necessary for small trees is injurious to older trees, which must to some extent be left free. Shortening or heading all the young growth, to make the trees thick and compact, prevents the admission of light and air, harbours dirt, dead leaves and insects, and produces dead branches, which sap the tree, the interior of which should be kept open for the free circulation of air.

If the tree be not large with a proper head already formed, select and leave such branches as may be necessary to form a suitable head, cutting off all others. Branches of neglected seedlings if shooting upward may be bent over and fastened to stakes in the ground. Whether the trunks be long or short is a matter of opinion, but in either case the lower branches have a tendency to bend down, and should be pruned every year, or at least every other year. These need not be cut off close to the tree, though it is sometimes necessary to cut some.

Place to prune.—On every limb close to the body can be seen a collar or ring, just outside which is the place to cut it off.

Time of pruning.—Heavy pruning should be done early in the season, but if done regularly and systematically, there is so little to remove that it may be done almost at any time. In the case of bearing trees, the greater part of the pruning can be done immediately after the fruit-picking; when much wood is to be removed, it should be done in autumn or early spring.

Occasions for pruning.—When diseased or injured, as will be noticed hereafter; if the trees are checked by severe cold, heavy pruning will cause such to grow; also in times of drought.

When the tree has a tendency to luxuriance of foliage with a meagre crop of fruit, another mode of pruning called "root pruning" is necessary. This operation consists in digging a circular trench at a distance of from 3 to 9 feet from the tree, according to size and growth, cutting away all the roots that may be encountered, and afterwards returning the soil. The best season of the year for this pruning is just before the annual growth is completed in the autumn, so that a check will have the effect of lessening the flow of sap and promote the formation of flower buds instead of foliage buds.

It has been stated that pruning on general principles is wrong, and that it should only be done for shape when the trees are young; but in practice judicious pruning from time to time will be found necessary. The mode of pruning, whether a high or low head be adopted, is not a mere matter of taste, but of principle; for on the adoption of one or other depends the difference between three

years' and six years' growth, and between a good and inferior tree, and consequently the resulting profit of the orchard.

Unfortunately the labours of the orchardist do not end with those above described; he must use the greatest vigilance to ward off injuries by vermin and attacks of disease. Both rabbits and mole rats injure fruit trees by gnawing the bark; the former can be kept off by smearing the trunk with blood, and trees girdled by mole rats can be saved by coating the barked portion with hot wax and cutting off a greater portion of the top, or by a thick poultice of rich dirt out of the barnyard secured by a cloth. The usual means of destroying such vermin are traps and poison.

The diseases to which an orange orchard is subject are:—"Foot rot," or the rotting of the bark around the crown and tap-root, caused by putting large quantities of crude manure close to the trunk, or by water standing close to the tree, and by hot weather causing the necessary fermentation; also by excessive irrigation and slovenly cultivation.

Gum disease, an exudation of the sap from the trunk close to the ground, and sometimes partly below, which will girdle and kill the tree. To stop it, cut out all the affected bark and wood, leaving none; cover the wound with hot wax, four parts of rosin or shellac to one of bees' wax, then with soil, and prune heavily.

Die back.—A disease found on trees on unsuitable soil, caused by setting them deep, or by the scalding of the roots by irrigation in very hot weather.

Smut or Black-rust.—A fungus growth, caused by an exudation from the black scale, which generally appears on trees in damp localities. This can be checked by thinning the tree by good pruning.

"Black, red and white scale" are the injuries caused by minute insects infesting fruit trees. The cause of their appearance is not clearly known, but is evidently due in some measure to bad pruning and slovenly cultivation. The complete remedy is equally unknown, and its removal could perhaps only be effectually accomplished by vigorous legislative measures. The partial remedy consists in the application by spraying of various compositions of whale oil, soap, kerosine and other ingredients, and by heavy pruning.

When fertilizers are required the best manures are stable and sheep dung, and as sulphur forms a constituent of the fruit of citrus trees, it can be applied in gypsum, sulphate of magnesia, potash and soda, iron and ammonia.

Having thus fully described the mode of cultivating an orange

orchard, it only remains in conclusion to show in figures what profit may be expected. Twenty acres of fruit land are generally considered equivalent to 160 acres of general farming land, but taking 10 acres as a basis of calculation, the outlay and returns will be as follows :—

Outlay.

10 acres of land, at $ 150 per acre, ...	$	1,500
Breaking, levelling, &c., ...	„	100
Budded trees (750) 24′ × 24′, at $ 1, ...	„	750
Planting and irrigating, ...	„	150
Cultivating, irrigating, wrapping, ...	„	100
Second and third years' cultivation, ...	„	300
Fourth, fifth, sixth, seventh and eight years' cultivation, ...	„	1,200
Taxes, ...	„	200
House and barn, ...	„	1,000
Incidental, ...	„	700
Total Outlay (less cost of living), ...	$	6,000

Returns.

In fifth year, 50 oranges per tree, at $ 20 per 1,000	$	750
Sixth year, 100 oranges per tree, at „ „		1,500
Seventh year, 150 „ „ „ „		2,250
Eighth year, 200 „ „ „ „		3,000
Total Return in eight years, ...	$	7,500

The selling value of an orange orchard in full bearing would be $ 800 per acre.

Orange culture may certainly be regarded as one of the pleasantest and most remunerative occupations with a good demand for those possessing even only a moderate capital.

DOVER COURT,
Near Harwich,
April 15th, 1889.

A. C. LAWFORD,
Civil Engr., Madras D. P. W. (Retd.)

III SHIKAR AND TRAVEL.

SEVEN BEARS IN TWO HOURS.

On the 29th of March, 1889, I was encamped at Ranipur, a small Bhíl settlement at the base of one of the highest points of the Satpuda Range, in most picturesque and dense forests, which contain but few springs of water and have but an indifferent reputation for *shikar*. Last year I had passed through this very country on duty bound, and having learnt from experience that, though a good deal might be spoken of as existing in the shape of tigers, panthers and bears, but little might be expected to come of it: in fact, after having been drawn once or twice from my tent at midday for the pleasure of a beat round an imaginary bear that had cleared off in the early hours of the day on seeing, smelling or hearing the men who were out marking down game, I naturally was somewhat incredulous when I saw the ugly but cheery face of Ramji (as keen a Bhíl as ever pugged) appearing in front of my tent with the laconic phrase of *Pakka khabar, Sahib.* "Well!" I said, "what is it? Have you got on to that "tigress at last of which you have talked since Probyn Sahib last came here?" "No," he said—and added in a hesitating way, thinking doubtless that I should not believe him—"but there are "seven bears marked down." "Seven"! I said. "One will do for me," as I had not shot anything to speak of since the beginning of the month, and was feeling that the sight of a bear would be a treat for sore eyes. After a short enquiry as to where the bears were lying, and having the positions shown me in a vague sort of way as being "over there, under that hill are four," and "the others over there, &c.," the necessary and usual preparations for collecting beaters had to be gone through. A couple of peons in camp were despatched to neighbouring settlements to bring up as many men as they could to a rendezvous, fixed for noon, within a mile of the supposed position of the nearest batch of the bears, where my *shikaris* and a few local men had agreed to meet us. The heat at starting was, of course, tremendous, but I did not register it or think much about it until after arriving at the

rendezvous, where not a man could be seen beyond a deaf and half-blind old Bhíl, who was tending a few emaciated buffaloes. The information he gave us was annoying, to say the least; and when every beater had been sent to the four quarters of the globe (beginning, of course, with the smallest and weakest) to find out where the others were, I began to have sad misgivings about these seven bears. Ramji, however, stuck to the story, and said he had seen four of them himself, but they were not to be beaten out until the nearer three had been visited. I had great faith in Ramji's word, and it naturally kept up my spirits hearing him abusing the absent ones to himself in his choicest classic. I determined to wait till sunset if necessary, and if the *shikaris* and others were later than that, to have their blood instead of the bears. Meanwhile a few more beaters arrived under convoy of the peons, but they were not enough to enable me to start the beat alone. Besides, these men are by themselves of no use for driving bears or tigers; they serve as fairly good stops when in trees, but the beating has to be done by one's own *shikaris*, assisted by a few men selected by the former from amongst the locals on account of their not being quite such abject cowards as the rest of what the Bhíls of the plain and valley call a "Manchi." In fact the Manchi with but few exceptions is an arrant coward, and will bolt up the nearest tree at the slightest sign of danger. But I digress, and instead of doing so I ought to have explained the fearful temper I had worked myself into after the space of nearly two hours' waiting in a temperature which could not have been far short of 125°. However, all's well that ends so! and when, with my choicest Mahratti, I greeted a "Manchi," who, by the way, understood nothing but "Manchi bat," and asked him what he said, I learnt that I had not come to the proper rendezvous, but that everybody was ready a mile off. After a pull up one hill, down another, and up the opposite side, I came on a very noisy crowd, who told me that as the wind blew in all directions the bears would be sure to bolt before the "ghera" could be put round them. This, and a few other encouraging remarks as to my chance of seeing a bear at all having passed, I got my men to silence the crowd and get a little discipline into it. I then walked forward with Rumal, a Bhíl who does generalissimo on these occasions, to examine the ravine where the bears were, and made up the plan of attack. I had determined to bag the three bears if possible, and this could only be done by standing on the ground with a good supply of guns. In a tree it would be impossible to get a sufficient number of shots off before the bears would have got out of easy range, even admit-

ting that the first shots told. So I went to the "likeliest" spot with Ramji, taking a double-barrelled 500 Express by Lang, a double-barrelled 12-bore by Tolley, burning up to 8 drams of powder, and throwing a 2-ounce conical ball, and a double-barrelled No. 12 smooth-bore, which was generally used by Ramji when matters grew ticklish. We had to take up a very awkward position at the meeting of two ravines, as it was impossible to see anything in the part whence the bears must come, owing to the undergrowth. At my back was a small open space, and more jungle again beyond, and it was in these few yards of open I hoped to give our hosts "what for." It was now 3 P.M., and so I hurried on the other *shikaris*, and they having each taken a gun, and a party of men having surrounded the patch of thick jungle in a very short time, I heard the first yell break out at the end of the beat furthest from me, and very shortly after I saw a stop in a tree to my right getting very excited; then came a crashing of Karvi, an indistinct bounding of black fur, and three bears took the open 25 or 20 paces to my right. I was kneeling, so they had not seen me, and the leader coming out at full gallop got a 500 Express a little far back, just behind the liver. It turned right about and pinned No. 2 by the throat. Both seemed about to have a fight sitting on their haunches, when the left barrel from the Express got No. 2 just behind the shoulder. No. 3 having bolted back already, I let fly with the Tolley right and left into the first two as they went head over heels into the ravine to which I referred above. Back I took the Express, and not a second too soon, for the beaters closed on No. 3 so well, that they forced it back to my left front. A right and left settled it, and then "*shabash*"! "*shabash*"! went up as usual from my *shikaris*, who had full confidence of the results when they heard the fusillading. Well, I confess I was glad at my success. I then went down with Ramji very cautiously into the ravine to see whether all were quite dead. One, strange to say, was still moving, at least Ramji, who had the eyes of a hawk, said it was; and as I was trying to get into a good position for a shot, the Forest Ranger who had a double-barrelled 12-bore smooth by Locke, of Calcutta, let fly into it at about 60 yards, and hit in real good style. The bears being dragged out measured 5 feet 6 inches, 5 feet 4 inches, and 5 feet 3 inches; the largest, a female, was *enceinte*. The question then arose what to do next? I felt, I confess, so thoroughly contented with my day's work, that, had not a *shikari* of mine said, "Sahib, you know you always get your bad or good luck at *shikar* in large orders, so we shall be sure to get the other four if we go on, and then think of the rewards!" So, after leaving a couple of Manchis and the local forest guard in

charge of the slain, we went off to the other bears, which were in a ravine about 1½ miles off. I have climbed hills on the Western Ghâts, and also done a good deal of climbing in the Alps, but I never had to go down such a precipitous incline as I had to this day in order to take up my position for the next beat. I fell twice, bruising myself a good deal, and the few Bhíls that were with me had a fall every now and then. The man, however, knew the ground well, and whilst I was getting to my post with a few side slops, the others went down below and encircled the patch of jungle that had to be beaten. I sat rather more outside the beat than I cared for, but commanded a good view of a narrow "khind" (pass) through which the animals must pass if they took to the hill at all: so arranging my battery as before, I waited, and in a few minutes the shouting commenced. I could see from the side stops to the right that they were turning something, and suddenly through the "khind" appeared master Bruin. He came straight on towards my naka, and got amongst some large boulders between the khind and it; he mounted one large boulder, and was just taking stock of the whole business when I rolled him over. He never moved again, as far as I could judge, as he fell amongst the boulders out of sight. Just then what I must call an infernal shindy seemed to be taking place down at the lowest end of the beat. Ramji whispered in my ear: "Mother and cubs; the mother is fighting with some one." Three or four quick reports were heard, and then nothing but yells from the beaters. Shortly after a bear and two cubs appeared in the khind, when for some reason or other one turned back, the other cub following, the mother growling and squealing, came past me about 20 yards to my left. I had not cared to fire until I got a broadside shot, as the bears were going at such a pace. When the big one was full on, I let her have the Express, and she rolled over, as I thought, stone dead, so I let her cub have the left with similar results; but both began to move, so I gave the mother "two" from the Tolley and silenced her, and scrambling down the nala with my Express killed the cub. The other cub had to be accounted for, and so, when the beaters came up within speaking distance, I learnt that it was lying nearly dead about a couple of hundred yards down the ravine. Having after much scrambling and tumbling got to a place from whence I could see it, I let it have the Express, as it was full of life, and in fact had to give it a second before I killed it. I was then told that it got wounded in the scuffle that took place after I shot the first bear; for on my gun going off, the she-bear turned and was determined to rush the beaters with her cubs. However, she

could not face the firing, and Rumal let one cub have a "pill," because, as he said, it was the most determined of the lot to force the line.

Being curious as to the time all this shooting had taken, I pulled out my watch, and saw it was just past 5 P.M. Allowing for the time that had elapsed since killing the last cub, I am entitled to say that the seven bears were bagged in two hours. Never was my right arm so sore and bruised, and never was there such a jabbering amongst the Bhíls as to the enormity of my "nasib." The measures of the last four bears were 5 feet 8 inches, 5 feet 6 inches, 3 feet 3 inches, and 3 feet 2 inches. The dog-bear I found had been shot in the head: in fact, as he stood looking towards me, it was the only place to fire at. I questioned my men and the local Bhíls, some of whom had hunted long before Major Probyn's time even, and they all admitted that they had never heard of such a bag in one day falling to one Sahib. In closing this account I must apologise for not giving the world and its sportsmen any new tips as to how bears should be *shikared* and bags of seven made in one day. I have only written this account to put on record a remarkably large bag of bears made under the most ordinary circumstances, which might be equalled and surpassed with good luck, provided also that the old rule of "never give in" be strictly adhered to. For my readers must not imagine that the only difficulties on this particular day lay in missing the rendezvous and waiting hours in a broiling sun. There were many other moments of intense excitement and fatigue, of which my brother sportsmen in India are fully cognizant and perfectly willing to undergo for two bears in seven days instead of seven bears in two hours.

Dhulia. R. FAGAN.

FOREST FOLK-LORE.

II.

THERE is a somewhat out-of-the-way part of India a visit to which will fully repay the trouble of getting there. This is the north-west corner of the Mysore country, where Mysore, Bombay and Madras meet. The scenery is very beautiful along the Western Ghâts, and not the least beautiful part is where the Gairsoppa River winds its way through wooded hills, opening out here and there into narrow valleys, till it emerges on a wide plateau. Here it spreads itself out fan-like, in many devious streams, and these, again beginning to draw together, meander over a bare mass of

rock, hemmed in by and overhanging a wide ravine lying fully a thousand feet below the huge mass, which just here is carved out into a great bow or horse-shoe. The water, as if afraid of the leap, wanders backwards and forwards, but, pressed on from behind, at last bursts forth in five falls sheer down 834 feet. Beauty alternates with grandeur. Here, the *Dame Blanche* sheds itself in one vast mass of soft white foamy water flakes, floating ever in space as if loath to touch again the earth from which they have just escaped. There, the great shining flood of the *Greater Rajah*, mimicked by its satellite, the *Lesser Rajah*, comes down in one solid glacier-like body, black as night below, but lit up above with a thousand gleaming lights. Midway leaps the *Rocket*, which, breaking up its waters into a thousand streaming meteors, seems rather to be a fountain springing upwards towards the sky : while behind, the *Roarer*, with one vast ceaseless volume of sound, comes forth from a deep cavern and sends its waves forth in regular pulsations. The rocks are in masses of a rugged gigantic character, but, as they close in in front and far below to look back, as it were, on the glorious scene, their ruggedness is tempered with a singular softness of environment, for the gray granite cliffs covered with bright lichens shoot up through a rich garment of foliage.

"Nor were these earth-born castles bare,
Nor lack'd they many a banner fair;
For from their shiver'd brows display'd,
Far o'er the unfathomable glade,
All twinkling with—the dewdrops sheen,
The briar rose fell in streamers green,
And creeping shrubs, of thousand dyes,
Wav'd in the west-wind's summer sighs."

A rough pathway leads to the bottom of the falls, but, owing to their vast height and to a bend in the ravine below, no distant and comprehensive view of the whole can be had from beneath. Above, however, good and convenient points of view have been discovered and paths cut to them, and the grand beauty of these Falls can be enjoyed at leisure from various places, each of which has its special advantages. The first sensation is one of disappointment, for it takes time for the eye to take in the vastness of the scene on which it is gazing. It grows on one, and more enjoyment of, and more capacity for enjoying, the glorious beauty here displayed by Nature is experienced after three or four days of gazing. A very comfortable rest-house has been built at the top of the Falls by the Bombay Government.

Many years ago two officers of the Indian Marine visited the

spot and determined to ascertain the exact height of the Falls, in a daring way which is fully described in a book kept in the rest-house. They managed to get a stout rope stretched across two rocks, swung a cradle on it, and pulling themselves out in this cradle let down a line, set off in fathom lengths and furnished with a lead. By this means they measured the depth with almost exact accuracy. It has since been fixed by careful levelling.

Everywhere along the Western Ghâts, from Gairsoppa to the Kundahs near the Nilgiri Hills, the scenery is beautiful. Sometimes it is of a quiet, peaceful nature, rolling away through exquisite park-like lands, with great solitary trees, or else masses of foliage, just where they ought to be : at other times the hills assume a rough and ragged appearance, or, again, are, on their western slopes, covered with enormous stretches of dark forest falling to the level of the lower lands, which are rich with great streams and rice fields and cocoanut groves, all bounded by the waters of the Arabian Sea, which glow like gold in the setting sun. Among the hills, and generally in the east thereof, are the *droogs (durga)* or fortified hills. The villagers hereabouts are a thoroughly good lot of fellows and ready enough for sport.

In the western parts of the district bison are still to be had, and for real hard work, combined with good stalking and woodcraft, bison shooting is not easy to beat. Seated around a blazing log fire about 9 P.M., outside the tents, and distributing a few cheroots and encouraging the native to talk, is the way to get at the hearts of these people. Puffing away, and grunting now and then, some old gonda (or squireen of the village) will open out his secrets, where the bison are, where you should go for deer or for an old boar, or he will tell a tale perhaps. How the old Polygar who held the fort at Maharaj droog, years ago, long before the *Dhoregallu* (Europeans) came into the country, was a great *shikari*, fond of all kinds of sport, and very brave. Was it not he and his brother Bela who went inside the nets with their spears and killed a wounded tiger alone, when all the other men refused to go in? And did not he kill two wild boars in one day in his areca nut garden with nothing but his *karr kaththi*, or big knife? He had had many children, but they were all daughters, fifteen of them, till at last the God gave him a son, and now he could die happy; for was there not one, a son of his own begetting, who would perform the ceremonies at his death? So the old Naik rejoiced greatly, and, being a vigorous old man, he lived on till his little son was now eight years of age, a bold, fearless boy, and already noted for his courage and agility. But his uncle hated him, and

stirring up intrigues against his own brother, this uncle persuaded two neighbouring Polygars to besiege old Tirmal Naik in his stronghold, and they shut him up and put him to great straits. He made many bold sallies, but he could not drive off his enemies, and there was now little left in the Droog for Tirmal Naik and his men to eat. One day a sore longing came over him to eat flesh, for he loved the flesh of deer, and now for many days they had had nothing but a handful of parched grain and a little water; and his son, dear to him as his life, was hungry and asked for food, for flesh meat. So the Polygar called his cook and said, "Get us meat?" "Whence can I get you meat, O Naik? Give me meat to cook and I will cook it, but speak not so foolishly." "If you do not find and prepare meat for me by tomorrow noon, I will kill thee and eat thy flesh," said Tirmal Naik in anger and foolishness. So the cook turned and went away, and on the next morning Tirmal Naik made a great sally on the besiegers and killed many of them and came back weary and hungry. As he came into the house he smelt the smell of roast flesh, and his spirit revived within him; and, after washing his feet, he sat down and the cook set meat before him, and he ate, and when he was satisfied, he sent word to the women's rooms that they should bring his son that he, too, might eat and rejoice. He sent, too, for the cook to reward him. But the messenger returned saying that the boy could not be found since the morning. Then the cook came in, and Tirmal Naik laughed and said, "You found me meat when I told you that I would eat you if you did not find food that I longed for. This is sweet, good food, and when my son hath eaten you also shall eat and rejoice. Whence did you get the meat?" and the cook said "O Naik! that flesh is the flesh of your son." Then Tirmal Naik fell backwards, his hands dropped by his sides, and the light went out of his eyes. He lay like one dead for a long while. Then he arose and called for his horse, and they brought it. He told them to dye its tail and mane pink, and the golden saddle cloth was put on it, and the golden bangle was clasped on its knee, and Tirmal Naik mounted it, his sword by his side, his leather targe hanging on his back, and his spear in his hand. Waving his hand to his people, who stood wondering around him, he rode fiercely to the edge of the great rock that projects from the eastern face of the mountain, and, urging his frightened horse over it, together they sprang outwards, and so Tirmal Naik leaped into death.

G. J. v. S.

JY. TIMBER MARKET.

STATEMENT OF AVERAGE SELLING RATES FOR THE QUARTER ENDING 30TH SEPTEMBER, 1889.

AT MEERUT.

	RS.	A.	P.		RS.	A.	P.
Sál 10′ tors (poles), per score from	10	0	0	to	20	0	0
Sál karis, 12′ × 5″ × 4″ ,, ,,	25	0	0	,,	40	0	0
Sál bed-posts, 7′ × 2½″ × 2½″ ,, ,,	7	8	0	,,	12	10	0
Bamboos of 9′ to 10′, per 100 score, ,,	25	0	0	,,	80	0	0

AT CAWNPORE.

Sál 10′ tors (poles), per score from	6	0	0	to	7	0	0
Sain karis, 12′ × 5″ × 4″ ,, ,,	11	0	0	,,	13	0	0
Sál bed-posts, 7′ × 2½″ × 2½″ ,, ,,	4	0	0	,,	5	0	0
Bamboos of 9′ to 10′, per 100 score, ,,	40	0	0	to	60	0	0

AT BULANDSHAHR.

Sál 10′ tors (poles), per score from	0	0	0	to	0	0	0
Sál and sain, &c., karis, 12′ × 5″ × 4″, ,, ,,	0	0	0	,,	0	0	0
Sál bed-posts, 7′ × 2½″ × 2½″ ,, ,,	0	0	0	,,	0	0	0
Bamboos of 9′ to 10′, per 100 score, ,,	60	0	0	,,	65	0	0

AT PILIBHIT.

Sál 10′ tors (poles), per score from	40	0	0	to	70	0	0
Sál karis, 12′ × 5″ × 4″ ,, ,,	30	0	0	,,	40	0	0
Sál bed-posts, 7′ × 2½″ × 2½″ ,, ,,	5	0	0	,,	6	4	0
Bamboos of 9′ to 10′, per 100 score, ,,	60	0	0	,,	100	0	0

C. BAGSHAWE,

Conservator of Forests, Central Circle,

N.-W. P. and Oudh.

V. Notes, Queries and Extracts.

One of the World's Wonders.—In a secluded ravine or glen, in a small island that lies in the Indian Ocean, away from the highway of commerce, of travel, and of pleasure, and therefore rarely visited, there grows, and has grown through many ages, a wondrous palm tree that may be fittingly ranked amongst the few wonders of the world. It is difficult to fix the time when the fruit of the coco-de-mer palm first began to attract the attention of travellers. Mention appears to have been first made of it by the Portuguese voyagers round the Cape of Good Hope towards India. At comparatively rare intervals the coco-de-mer nut was washed ashore upon the east coast of Madagascar, the east coast of Africa, and occasionally as far north as the Maldive islands. Rarer still, it was found floating at sea. All searches for the tree that bore the strange-looking thing having proved unavailing, and as it had never been seen in any other part of the world, it is no wonder that in those ages some queer legends became attached to it and were believed in. The commonest and, perhaps, the most natural one, assigned the habitat of the coco-de-mer to the bottom of the sea. It was believed to be the product of a submarine plant, forests of which were thought to be growing at the bottom of the Indian Ocean, somewhere in the region of the Equator. The coco-de-mer had never been seen growing on land. It had always come from, or been met with at, sea, and therefore it was quite natural to conclude that it was a native of some part of Father Neptune's dominions. It bore a curious resemblance to an overgrown hybrid cocoanut; hence it was called in French coco-de-mer—*Anglice*, sea cocoanut. The mystery of ages was solved, however, when Mahé de la Bourdonnais, the Governor of the French Possessions in those parts, discovered the Seychelles Archipelago. But the solution of that mystery only gave rise to another. Here was a group of upwards of 20 islands, 11 of which bore a dense vegetation, and yet the coco-de-mer grew only upon two of those islands, and those not by any means the largest of the number. Other islands there were within a distance of a dozen miles, and several more within 20 miles, and yet this strange plant

had elected isle Praslin and isle Cureuse as its domicile, and obstinately refused to budge therefrom. More than that, it resents every attempt to naturalise it elsewhere, and shows that resentment by refusing to grow and flourish at the rate at which a grateful and well-behaved tree should do. Leaving out of the question those places beyond the seas in which attempts have been made to naturalise it, the coco-de-mer does not take kindly to the soil of any other island in its native archipelago, except those of Praslin and Cureuse; and even respecting these two islands a word of explanation is necessary. They are merely divided by an arm of the sea about 500 yards wide, and the lay of the land and other indications go to prove that at one time the two islands were one. The French in de la Bourdonnais's time are said to have found Praslin and Cureuse nearly covered with coco-de-mer forests, but the trees now left standing would not cover one square mile, and even those, unique though they be, narrowly escaped falling victims to the ignorance and cupidity of the Goths and Vandals who inhabit those parts. Happily, however, the Linnean Society heard what was going on, and about 12 years ago moved the Secretary of State for the Colonies to stay the hand of the destroyer. Fortunately, the greater portion of the ravine is Crown land, and I think it was Lord Carnarvon, then at the Colonial Office, who directed that measures should be adopted to preserve the old trees and foster the growth of the young plants.

And now for a short account of the plant itself. A ripe nut falls, or is laid, upon the ground. In two or three months' time it will germinate and begin to take root. At the end of a year or so it will throw out a spike, which grows to a height of 40 to 45 inches, is about 1½ inches in diameter, round, and sharply pointed at the top. This is the future leaf. At the end of another year a second spike sprouts and grows close by the side of the first one. The second spike does not sprout from the first one, but comes out of the ground close by the side of it. As the second grows, the first spike gradually and slowly unfolds and expands into a leaf, the shape of the leaf of the fan-palm. At the end of the third year a third spike makes its appearance, and, as it grows, the second shoot unfolds and becomes the second fan-like leaf of the future tree. As the spikes, or, more properly speaking, as the leaves shoot, they are arranged in a clump, so that as they grow they assume an all-round appearance. From this account it will be seen that the coco-de-mer palm only puts forth one leaf a year. As a matter of fact, it does not always accomplish that much, for trees have been occasionally known to go 15 months between

putting forth leaf and leaf. At the age of from 15 to 30 years the plant—it has not yet assumed the dimensions of a tree—is at its best from an artistic point of view. The leaf-stalks spring straight from the ground as from a common centre, to a height of about 10 feet or 15 feet. Then comes the leaf, and a glorious leaf it is. At the last-mentioned period—30 years—it will be a magnificent fan-like structure, 15 feet by 20 feet. Leaves have been frequently observed which measured 18 feet by 25 feet. It can be easily imagined what a stately clump of gigantic palm-fans a dozen or twenty of such magnificent leaves made—all of them being nearly of the same height, say 20 feet or 30 feet from the ground to the top. This process goes on for some years longer. I know a tree that grows in the Government house gardens at Seychelles that, at the age of 45 years, did not show any perceptible trunk; the leaves still appeared to spring from the ground, though, upon a close examination, the solid trunk was found to have broken through the surface of the earth. The time alluded to was the year 1875, and any homeward-bound passenger by the Messageries Maritimes Co.'s steamers may land at Seychelles and ascertain for himself how much that tree has grown during the last 13 years. There will be no difficulty in seeing it. It is not more than 200 yards from the landing-place, and the Chief Civil Commissioner, Mr. Arthur Barkly—a son of Sir Henry Barkly—does not keep the gate of Government house grounds locked against Australians. At the age of 45 years the tree in question blossomed, and it then became known that it was a female tree. No coco-de-mer palm bears both male and female blossoms. The sex of the tree—male or female—is very clearly defined, the blossom of the one bearing no more resemblance to that of the other than a horse bears to a house. Neither does what is called the "blossom" of either bear the least resemblance to a flower of any known species. The fertilising power of a single male blossom is sufficient for a small forest of female trees, if the pollen be artificially conveyed to them. The male tree only puts forth one blossom at a time, and that one blossom retains its fertilising powers for several years. The female blossom is nearly 12 inches across—I have seen a male blossom 30 inches in length—it has four or five petals about an inch and-a-half thick, and it is a shade lighter in colour than the leaf of the tree. Like the blossom of the cocoanut, it springs from the stem at the root of a leaf-stalk, and I believe, though I am not certain upon that point, that not more than one, or at most two, blossoms appear at one time. There are sometimes as many as five or six fruit in one cluster, though that is an exceptional number. A

full-grown coco-de-mer nut weighs 40 to 45 lbs., and five of such would weigh at least 200 lbs. The stalk that bears this weight is, therefore, not only strong in itself, but it is supported by mechanical means of Nature's own contrivance. In the underpart of the flower-stalk there is a slit, deeply indented. As the stalk grows, this slit and indentation become more fully developed. At a little distance below the flower-stalk there springs out of the trunk a thick wedge-like substance at an angle of about 40 degrees with the stem, and as the wedge and the flower-stalk continue to grow, the edge of the former meets the indentation and grows into it. Thus, as the fruit increases in weight, Nature has provided a powerful natural strut that materially helps to support the burden. We now come to a fourth part in connection with the coco-de-mer palm, which is, perhaps, the most surprising of all. From the fertilisation of the female blossom to the time when the ripe fruit will drop off the tree a period of ten, and sometimes eleven, years will elapse. This will not appear very astonishing when we recall the fact that this strange tree puts forth only one leaf in twelve or fifteen months, that the blossoms appear at still more distant intervals, and that these same blossoms retain their propagating properties for four or five years. Naturally the growth of such trees is slow, and a hundred years, after the first few hundreds have passed, make no perceptible difference in their height.

Let us take a look at the tree in its native glen at Praslin. This island lies 20 miles from the island of Mahé, and can be seen from the deck of the mail steamer as she rounds St. Ann's Island on the way to her moorings in the outer anchorage of Port Victoria. On my first visit to Praslin, I went across from Mahé as the guest of Captain C—, commanding H. M. S. *Flying Fish*. There was a safe anchorage for the launch inside the reef, and we went ashore. A 10 minutes' walk over an alluvial flat brought us to the mouth of the ravine, and upon arriving there we found—what generally happens in similar cases—disappointment. It is nearly always so. The Falls of Niagara, for instance, almost invariably come short of the traveller's expectations. But the fault is entirely his own. He has formed an ideal standard that not even Nature can approach. It was so in our case with the ravine. One had to get accustomed to it, and to think, before its peculiarities were understood and appreciated. I have already said that the authorities had to interfere a few years since to prevent the utter extermination of the coco-de-mer trees. It will, therefore, be easily understood that the most ancient of these patriarchs of the

vegetable kingdom are now to be counted by hundreds instead of by tens of thousands. These, the oldest of the species, have attained a height of 100 feet, and the stem of the very tallest amongst them is not more 12 to 15 inches in diameter. As the trees increase in age, the noble proportions of the leaves diminish, and the head of a very old tree presents an undignified appearance. The leaves appear out of all proportion when compared with the height of the stem, and a ragged cabbage on the top of a high pole would be a fair caricature of a full-grown coco-de-mer tree. The question arises, however, when is one of these trees full-grown? No one can tell. The most experienced of botanists can only pronounce those in the ravine—the oldest of them—to be thousands of years old. But how many thousands? It is agreed that they may be antediluvian, but no one can assert that such is the case. It is a curious sensation, though, to sit down and look at one of these trees, and reflect upon the possibility of its having taken root about the time that the Chinese Empire was founded. And why not? A tree that can keep one of its leaves alive for a quarter of a century must possess an astonishing amount of vitality somewhere. The ravine in which the tree grows is also worthy of the strange associations connected with it. It is formed by two spurs of a mountain which are thrown off in a south-westerly direction. The sides are very steep, and about 500 feet in height in places. It is upon these sides, and in the rich bed—about 100 yards wide—that the tree grows. There is a footpath running along the ridge up one side, across the head of the ravine, and along the ridge on the other side. But that is not the way to see the ravine. The spectator should not look down from the top to the bottom, but from the bottom towards the top. In the former case he looks upon the tops of the trees for the most part, and cannot form the least idea of the gloomy grandeur that lies hidden at the bottom of the gorge. There he will find himself in the midst of a perfect jungle of young trees (the coco-de-mer is young up to the age of a hundred years), the leaves of which roof him in overhead, envelop him at midday in a solemn twilight, in the midst of which are engendered thoughts, especially if he be alone, such as were never begotten in the aisles of the stateliest cathedral ever built by human hands. The leaves of the young trees are the largest, the thickest and the strongest. A very slight breeze is sufficient to move them. But the term "rustling of the tree leaves," would be misapplied to them. They have a music quite their own, that rises and falls like the dashing of surf upon a reef of coral. If, however, any one desires to hear this music at its loudest, it

must be heard when the south-west monsoon blows straight up the ravine, and expends its fury upon a hundred thousand of these gigantic fans, anyone of which would form the side, from floor to ceiling, of a fair-sized room. To any one who enters for the first time at such a season, the effect is terrific and appalling in the extreme. I have been in a storm at sea, and have heard the heaviest surf dashing against rocks, but neither of these convey any idea of the crashing, deafening din, noise, uproar—call it what you please—to be heard there. On the deck of a ship, in the direst storm, one can at least see what is going on around. But in the ravine all is gloom, in the midst of which can be seen thousands of gaint leaf-stalks swaying about like human arms, and dashing the enormous leaves they hold against other leaves nearest them. It is a crashing, deafening, furious war of leaves, fighting against one another, in a *mêlée* the chief characteristic of which is indescribable noise and confusion. The bed of the ravine is strewn with immense boulders of granite, which at intervals of time have rushed headlong down one or other side of the mountain ; and as the shrinking eye glances upwards, whenever an opening is formed through the war of leaves, it discerns numbers of other boulders apparently only awaiting the merest touch to send them bounding after their fellows. It requires more than a trifling effort to keep the nerves perfectly steady in the midst of such surroundings, albeit one's reason tells us that the chances are against one of said boulders budging from its place for 20 years to come. From this imperfect, though certainly not overdrawn, description of the coco-de-mer ravine, it will be seen that there is something weird and uncanny about it, and that, when a strong south-west monsoon surges up the gorge and sets the enormous leaves warring against each other, the scene is changed to one of awful sublimity and grandeur. Such a place, and a tree with such a history, could not fail to produce a deep impression upon the imaginative mind of the late General Gordon, who loved to ramble there and speculate upon the past. Special duty took him to Seychelles a few months before he entered the service of the Cape Government, and he was charmed with everything he saw there ; and he more than once expressed his intention of returning to end his days at Seychelles when his services were of no further use to the outside world. Alas, his days were ended in a place far different in its surroundings. As to whether the tree would ever attain perfection in any other part of the world is a question yet remaining to be solved. There is not at present a single coco-de-mer outside of Praslin and Cureuse that has attained the age of a hundred years. There are

two growing at St. Ann's, and two or, perhaps, three at Mahé. One of the trees at Mahé is about 70 years old, but it does not thrive well. That one in Government house grounds is more lusty, and will be now about 60 years old. One of the two trees at St. Ann's is a male, and it was in blossom in 1873. I saw the same blossom carried away four years after by an officer of one of Her Majesty's ships, who had begged it as a curio from the proprietor of the tree. The kernel of the coco-de-mer is quite useless. If the fruit is plucked when seven years old, and opened, the shell will be found to contain a thick, white, semi-transparent jelly-like substance. It is rather sweet to the taste, but very insipid. The size of the nut varies from 10 inches to 20 inches in length, and from 10 inches to 14 inches in breadth. It is enveloped in a thick coating of fibre similar to that of the cocoanut. When quite ripe the shell is nearly black, and if sand-papered will receive a fine polish. I have now by me two of the most perfectly formed specimens obtainable. A rough nut may be purchased at Seychelles for four or five shillings. Symmetrically formed specimens are rare, and cost from ten to fifteen shillings. A great variety of fancy articles is manufactured out of the young leaf, and it was the desire to obtain this leaf, which really forms the heart of the plant, that led to the destruction of many thousands of these remarkable trees. Had not this Vandalism been checked in time, it is more than probable that twenty years hence not a coco-de-mer tree would have been left in the universe.—*Melbourne Argus.*

THE WORKING OF TIMBER FORESTS IN INDIA.—The system on which a vast majority of the Indian timber forests are now being worked, is that known as the "Method of Selection Fellings." This method of treatment consists in working over annually a very considerable area of forest, and felling out here and there a certain number of mature marketable trees, which have attained the required diameter, and others which are malformed or diseased, and would consequently either deteriorate still further or perhaps even die before the next felling takes place. This method of treatment is generally supposed to be analogous to the French system known as "Jardinage." Jardinage as applied in France is a most excellent method of treatment, and answers admirably, ensuring as it does natural reproduction, which is the essential point of all rational methods of treatment. The conditions under which the system is applied in France and India are, however, very different, and it is more than doubtful whether Jardinage as now applied to certain forests in India, is likely to be a

success. In forests of protection where the object in view is to maintain a continuous leaf-cover, where revenue is a minor consideration, and where it would be imprudent to open out the forest, either for fear of landslips, the washing away of the soil, or on account of strong winds, which might cause the total destruction of the forest, Jardinage is the only system which could be applied with any probability of success. It is in such forests only that the French Forest Department employ the system for the treatment of timber forests. In Indian forests similarly situated the method of selection fellings must be adopted. In France, forests worked on the "Jardinage" system, are, as a rule, forests of pure silver fir, pure spruce, or of beech mixed with silver fir and spruce. Under the mature trees is generally to be found an advanced growth of young trees and seedlings of the same species, unaccompanied by thick bushy undergrowth and grass; the gap made by felling the ripe tree is therefore soon filled up by others of the same species, which only required more light and space for further development. Under such conditions, provided the number of trees felled is not excessive, no danger accrues to the forest, as the continuous leaf-cover or canopy is not interrupted, and a regular sustained yield and annual revenue can be relied on. Jardinage so applied, is in fact the system of treatment which resembles, more than any other, the action of nature in virgin forests, where fires, cattle, and the destroyer's axe have never entered: the old mature trees being cut down and utilized instead of being allowed to fall and rot. In India the method of selection fellings is being applied under very different conditions, not only to forests of protection, and to pure forests or to those composed of at the most two or three different kinds of trees, but to timber forests situated at comparatively low altitudes where no danger is to be apprehended either from winds, landslips, &c., and which contain 20 or 30 different species of trees. Such forests have, as a rule, been worked for years. The system of working, if indeed it can be called a system, consisted in removing sound mature and, in many cases, immature trees of the more valuable species; and to make matters still worse these forests have been subjected to the ravages of fire and cattle. In such forests, therefore, it is not surprising to find an almost total absence of seedling re-growth, for the ground is often covered with an almost impenetrable matted growth of grass 6 or 7 feet high, and of bushes and thorny creepers such as *Helicteres Isora*, *Acacia pennata*, and *Cæsalpinia sepiaria*. The working plans framed for these mixed forests, containing, for example, such trees as *Tectona grandis*, *Dalbergia latifolia*, *Pterocarpus*

Marsupium, *Terminalia tomentosa* and *paniculata*, *Lagerstrœmia microcarpa*, *Anogeissus latifolia*, &c., generally begin by stating that the primary object of the plan is to substitute regular for irregular working, to ensure a sustained annual yield, and the gradual improvement of the forest. To show how the sustained yield can be maintained for the next twenty years or so, tables are given showing the number of trees to be felled annually in the different compartments, and the probable revenue which will be realized, the calculations being based on valuations made either in selected areas, or over a certain percentage of the area in each compartment. Provided the calculations are correct, a regular sustained yield is maintained for a period of 20 years, and a system of regular is substituted for irregular working. As only mature marketable trees are to be felled, the area over which the annual felling takes place is more or less considerable, for the forest may be so situated that it would not pay to remove inferior classes of trees. In order, therefore, to procure the annual yield, it may be necessary to work over 1,000 acres.

Although the provisions of the working plan concerning the number of trees to be felled annually are most precise, prescribing as they do the exact number of cubic feet to be taken out, the area over which the felling is to take place, the minimum diameter below which no sound tree may be felled, the provisions which are to ensure natural reproduction and an increase in the proportion of valuable, over worthless trees, are generally extremely vague. Fire protection and the exclusion of cattle, without which no working plan would be complete, are of course provided for. These by themselves might be sufficient, if the Indian forests resembled in the slightest degree those of France, but as shown above, they do not. Teak, for example, requires in the first place, a soft pliable soil, accompanied by a considerable amount of moisture, in order that the seed may germinate; and even in places where an absence of matted roots allows of the seed reaching the ground, the earth is often rendered so hard by the action of fire, and the hoofs of cattle, that germination is impossible. If by any chance the seed reaches the earth under bushy undergrowth, where a loose moist soil permits of germination, the young seedling pines away and dies for want of light. If an intelligent executive staff could be created, which really took an interest in the forests and did not abhor living in them, a general provision in the working plan, to the effect that all blanks were to be filled up by planting, and reproduction of teak encouraged by the removal of undergrowth, &c., in the area over which the previous year's an-

nual felling took place, some improvement in the forest might reasonably be expected. Unfortunately, however, an executive staff imbued with a love of the forest, and an intelligent interest in their work does not exist in Southern India ; for it must be admitted, that no occupation is more uncongenial to the native, than the work of a Forest Ranger, which, if his duties are to be satisfactorily performed, must necessitate a prolonged residence in malarious jungles, infested by wild beasts. Any general or vague provisions therefore for the improvement of the forest, which demand a certain amount of *savoir faire*, and allow necessarily more or less latitude to the executive officer, are treated as a dead letter. The consequence is that working plans, on the method of selection felings, although framed with the very best intentions, fail to ensure the desideratum of good forest management ; they may, and in many cases do, provide a sustained yield and regular annual revenue for a short period of years ; improvement fellings they may be, in the sense that they remove and utilise trees which are past maturity ; but that they will lead to the total extinction of teak, and the more valuable species is more than probable. Another method of treatment is being applied most successfully under certain conditions to timber forests in France, which has the advantage of working over a comparatively small area annually. As, under the system, trees of the same age become grouped together, mature trees will, therefore, only be found in one portion of the forest at any given time, instead of scattered about over the whole area, as is the case in forests treated under the method of selection fellings. Further, while prescribing the maximum number of cubic feet to be removed annually, it states definitely the exact area over which cleanings and thinnings necessary for the removal of bushes, and inferior growth, and for the gradual development of the young trees, are to be made simultaneously with the principal fellings, of which the main object is the realization of revenue. This latter system, where conditions permit, should gradually be substituted for the method of selection fellings. The substitution, however, can only be gradual, and must extend over a great number of years. As the method of selection fellings is the only system which can be applied to forests of protection, and as it will of necessity, on account of the conditions which exist, be continued for a certain number of years in a very large proportion of other timber forests, its execution should be carefully watched, and very definite provisions laid down for ensuring a re-growth of teak and other valuable species. Such provisions should prescribe the area over which cleanings and thinnings are to take place annually, and if in addi-

tion to this it be prescribed, that for every mature tree felled, ten seedlings are to be planted the following year, future generations may see some improvement in the forests of Southern India; but, if on the other hand we are to be satisfied with working plans, which after all is said and done, are too often mere arrangements for obtaining a guaranteed annual revenue for a short period of years only, and simply suggest improvements, which are never carried out, a rapid deterioration of the forests must be the result.* —(*Madras Mail*).

CANES AND STICKS USED IN THE MANUFACTURE OF WALKING STICKS, UMBRELLA HANDLES, &c.—COFFEE.—These sticks are the produce of the ordinary or Arabian coffee-tree (*Coffea arabica*), and are brought here from the West Indies. They are very hard and heavy, with a light-coloured bark, and have but little to recommend them.

EBONY.—Several kinds of ebony are known in the trade as Ceylon, Macassar, and flowered ebony. The two former are the produce of *Diospyros Ebenum*, and the latter of a totally different plant, namely, *Brya ebenus*. The first is a native of Ceylon and India, and furnishes the best true ebony, while the second is a small tree, native of the West Indies, and is sometimes known as green ebony and cocos-wood, so much used for making flutes. The ebonies furnish very choice sticks, which are cut from the solid wood.

EUCALYPTUS.—This, as its name implies, is the produce of *Eucalyptus globulus*, better known, perhaps, as the blue gum. It is a native of Australia, but has been introduced into many other parts of the world. The supply for the stick trade comes from Algeria.

FURZE.—Sometimes also known as WHIN or GORSE (*Ulex europæus*).—The stems of this common British plant are, as is well known, very irregular in their growth. When they are straightened and properly dressed, however, they make extremely pretty walking and umbrella sticks, and are in great demand.

MYALL WOOD (*Acacia homalophylla*).—A leguminous tree of Australia, the violet-scented wood of which is well known, and has been much used of late in the manufacture of pipes. The sticks are not polished, so as to preserve the scent.

NANA CANES.—This name has been given to the hollow reed-like stems of *Arundo Donax*, the rhizomes of which form excellent handles for umbrellas and sunshades. They are imported from Algeria.

OAK (*Quercus Robur*).—The saplings and branches of this well-known British tree are much used for walking sticks, and are

---

* We have put in this article, not because we agree at all with the writer, but to point out in a future issue, the numerous mistakes and misstatements with which the article bristles.—[ED.]

always in demand. Under the name of Brazilian oak, a stick that has met with a very large demand has been known in the market for some few years. It is corrugated longitudinally, and knotted throughout, the knots being especially thick near the knob. Though this stick is a great favourite, its botanical origin at present is obscure. It is imported fron Bahia, and is sometimes known also as Ceylon vine.

ORANGE.—The orange sticks, which are imported chiefly from Algeria, are probably the produce of other allied species besides that of the common orange (*Citrus Aurantium*). The bark of the orange, when dressed and polished, has a bright, greenish colour, with white streaks, and makes extremely pretty sticks, for which there is a constant demand.

ORANGE, BLACK.—This is a distinct product from the foregoing, and is not furnished by any species of *Citrus*, but by the common broom (*Cytisus scoparius*). The bark has somewhat of the orange marking, but its colour is nearly black, as its trade name indicates. It is imported from Algeria.

PALMYRA.—These sticks are cut from the solid wood of the palmyra palm of India (*Borassus flabelliformis*). Two varieties are known, black and red, the one with intense black lines, the other with red. The wood is imported from India. [The red must be cocoanut wood ?—ED., *T. A.*]

PENANG LAWYER (*Licuala acutifida*).—This is a palm, the saplings of which, with the roots attached, are imported in considerable quantities from Penang.

PIMENTO (*Pimenta officinalis*).—A tree common in Jamaica, where it is largely cultivated for the sake of its fruits, which are the allspice of commerce. For the stick and umbrella trade, large quantities of the young saplings are imported from the West Indies. The sticks are valued specially for umbrella handles, in consequence of their rigidity and non-liability to warp.

POMEGRANATE (*Punica Granatum*).—These sticks come mostly from Algeria, where they are specially cultivated.

RAJAH CANE.—This favourite stick has been known in commerce for some twenty years or more. It is imported from Borneo, and for a long time after its introduction its botanical origin remained a mystery. It has, however, since been referred to the genus of palms, *Eugeissonia*, and probably to the species *minor*. The commercial name rajah is said to be derived from the fact of the duties paid for its export being claimed by the Rajah of Borneo.

RATTAN.—Under this name a variety of sticks, apparently the produce of different species of *Calamus*, are known. Thus we

have root rattans, white hard-barked rattans, monster rattans, miniature rattans, and so on. They are all of a similar character, with the scars of the fallen leaves strongly marked in transverse rings. They are the produce of Eastern countries. From the foregoing notes it will be seen how extensive are the resources of the walking and umbrella stick trade at the present time, and how the forests and jungles of the world are laid under contribution to supply the material.

The following estimate of the annual imports of some of the principal canes from the East here referred to will further illustrate its commercial importance :—

Description.	Country.	Approximate quantity.
Bamboos, ...	China and Japan, ...	5,000,000
Partridge canes, ...	China, ...	2,500,000
Tonquin canes, ...	China, ...	20,000,000
Malacca, ...	Siam, ...	250,000
Whangee, ..	Japan, ...	600,000
Rattan, ...	Singapore, ...	100,000
Other Eastern canes,	China, &c., ...	500,000
		28,950,000

Besides these, the number of various kinds of rattan canes imported from Singapore and other Eastern countries amount in weight to about 1,500 tons, while of sticks other than canes we have of olive, myrtle, orange, and various kinds from Algeria, as many as 2,000,000 ; and of hazel, dogwood, cherry, &c., from Austria, Hungary and France, about 3,000,000. The total value of the sticks in the raw state imported from all countries may be estimated at about £300,000.—J. R. Jackson, *Journal of the Society of Arts.*

Nitrogen of Vegetation.—Having considered in a previous article Sir J. Lawes' and Professor J. H. Gilbert's evidence by direct experiment as to whether the higher plants or soils, by the agency either of micro-organisms or otherwise, fix the free nitrogen of the atmosphere, we pass on to consider the various modes of explanation adduced.

Gains of Nitrogen.—

(*a*). That combined nitrogen has been absorbed from the air, either by the soil or by the plant.

(*b*). That there is fixation of free nitrogen within the soil by the agency of porous and alkaline bodies.

(*c*). That there is fixation by the plant itself.

(*d*). That there is fixation within the soil by the agency of electricity.

(*e*). And, finally, that there is fixation under the influence of micro-organisms within the soil.

The balance of evidence recorded is considered, however, by the authors to be undoubtedly in favour of the last-mentioned mode of explanation, and that unless there be experimental error, it is pretty clear that there is fixation in the soil under the influence of micro-organisms or other low forms.

Losses of Nitrogen.—Much of the investigation that has been undertaken in recent years has been instigated by the assumption that there must exist natural compensation for the losses of combined nitrogen, which the soil suffers by the removal of crops, and for the losses which result from the liberation of free nitrogen from its combinations under various circumstances. The loss by cropping, under the usual conditions of more or less full periodical return by manure, is estimated by the authors to be about 20 lbs. per acre. The loss by drainage, however, is much greater, and in some cases considerable. There may also, under some circumstances, be loss from the soil by the evolution of free nitrogen. Such loss may take place in the manure heap, or in soil very heavily manured, as in market gardening. But in ordinary agriculture such excessive manuring seldom takes place. Loss may also take place when the soil is deficiently aërated. But the balance of evidence is against the supposition that there is a constant and considerable loss by the evolution of free nitrogen from arable soils, which are only moderately rich in organic nitrogen, and which are fairly drained, either naturally or artificially.

A compensation for soil-exhaustion.—Whether we consider, say Lawes and Gilbert, the facts of agriculture generally, or confine our attention to special cases under known experimental conditions, the evidence does not favour the supposition that a balance is maintained by the restoration of nitrogen from the large store of it existing in the free state in the atmosphere. Further, our original soil-supplies of nitrogen are, as a rule, due to the accumulations by natural vegetation, with little or no removal, over long periods of time; or as in the case of many deep subsoils, the nitrogen is largely due to vegetable and animal remains, intermixed with the mineral deposits.

The agricultural production of the present age is, in fact, so far as its nitrogen is concerned, mainly dependent on previous accumulations; and, as in the case of the use of coal for fuel, there is

not coincident and corresponding restoration, so in that of the use or waste of the combined nitrogen of the soil, there is not evidence of coincident and corresponding restoration of nitrogen from the free to the combined state.

In the case of agricultural production for sale, without restoration by manure from external sources, a very important condition of the maintenance of the amount of nitrogen in the surface soil, or of the diminished exhaustion of it, is the growth of plants of various ranges and characters of roots, and especially of leguminous crops. Such plants, by their crop-residue, enrich the surface soil in nitrogen.

It is, as a rule, those of the most powerful root-development that take up the most nitrogen from somewhere; and this fact points to a subsoil source. But independently of this, which obviously might help to be only evidence of the necessity of obtaining water and mineral matters from below, in amount commensurate with the capability of acquiring nitrogen from the air, the experimental results at Rothamsted can leave little doubt that such plants obtain, at any rate, much of their nitrogen from the subsoil.

Inherent fertility of soils.—Bearing in mind, however, the very large store of already existing combined nitrogen, especially in subsoils, it is important to consider in what way or in what degree this store may contribute to chlorophyllous vegetation?

There is, in the first place, the question whether the roots of some plants, and especially those of certain deep and powerfully rooting Leguminosæ, whose root-sap is strongly acid, may either directly take up organic nitrogen from the soil and subsoil, or may attack and liberate it for further change, the nitrogen so becoming more available.—*Gardeners' Chronicle.*

FORESTS, RAINFALL AND CLIMATE.—The continued cutting down of the forests in this section of the country, and the unusual rainfall of the present season, suggests a few thoughts on the subject of forest influence on rainfall and climate. Surely grave responsibilities rest upon those pretended scientists who can regulate the rainfall, the flow of the rivers and the temperature of the climate by cutting down or setting out trees, as the case may be.

Here in New Hampshire, where, in spite of the fearful warnings and the positive predictions of terrible droughts through the speeches and writings of weather experts, we have cut down and destroyed much timber and wood, yet in September, 1888, we had 10·97 inches of rain, and in October it also poured down upon us

in immense quantities. At the West, however, strange as it may appear to these scientists and weather regulators, where there has been more forests planted, according to statistics, than there has ever been on any other part of the globe, we have advices of terrible droughts prevailing throughout the summer of 1888. Last year the West suffered greatly for want of rain, and in September of the same year we people of New England had but ·80 of an inch of rainfall.

I have been over the State of New Hampshire to a considerable extent, yet I am ignorant as to whom the guilt should be charged for setting out such a number of trees since September, 1887, as to increase our rainfall in 1888, from the ·82 of an inch last year to 10·97 inches this year, or 7·51 inches above the annual average of a term of years. The papers inform us that it is relatively as wet and cold this year in old England as in New England, while it is unusually hot and dry in the South and dry in the West. Ben Jonson wrote something as follow :—

> Of all the ills which human life endures,
> How few are they which kings can cause or cure?

Far otherwise is it in the case of our friends, the tree theorists and weather regulators ; to judge by their publications and orations, most of the ills to which human life is heir lies within their jurisdiction. If any one doubts this statement let him turn to the *North American Review* of recent date, and learn from one of these scientists how much of the earth has already been made a desert, and see how soon at the present rate of forest destruction the whole earth will be one vast Sahara. The picture is one of the most appalling desolation, and one which, according to the scientists, may be entirely avoided by growing forest trees.

In theory it seems true that one may shake the solar system by stamping upon the earth. Man may to a greater degree modify the climate and possibly affect the rainfall by his operations in agriculture and forestry, yet I fail to find proof of such supremacy over the subject as many theorists claim.

Let us look at a few sound practical facts with a historical backing. Plymouth Colony, Mass., was settled on the easterly side of what I take to be the largest forest on the globe at the time, and again, by the Atlantic Ocean. According to modern theory, how it should have rained upon the poorly-housed head of our Pilgrim fathers and mothers! What were the facts? The first fact which was recorded in Plymouth Colony was held to pray for rain. Let us quote again from history, to see what effect this vast forest had upon the rainfall in Plymouth Colony.

I give a list herewith of the droughts the colony endured, also a list of the subsequent droughts in the same section of the country, as published in the early records and subsequent papers. Recorded as above, I find the number of successive days without rain in the year 1621 to have been 24; in the summer of 1630 there were 41 successive days without rain; in the summer of 1657, 75 days; in 1692, 80 days; in 1674, 45 days; in 1680, 81 days; in 1694, 62 days; in 1705, 40 days; in 1715, 45 days; in 1728, 61 days; in 1730, 92 days; in 1741, 72 days; in 1749, 108 days; in 1755, 42 days; all successive days without rain.

In the summer of 1762 we have a remarkable record of 123 successive days without rain; in fact, there was no rain from the first of May to the first of September, and many were obliged to send to England to import from that country their supplies of hay and grain to sustain life. In the summer of 1801 there were 32 successive days without rain; in 1802, 23 days; in 1812, 28 days; in 1856, 24 days; in 1875, 26 days; and in the summer of 1876 we have a record of 27 successive days without rain.

These facts are certainly very suggestive, and are perhaps as reliable as the fanciful theories evolved in the brains of weather and forestry scientists.—JOHN D. LYMAN, Exeter, N. H., in *American Cultivator.*

WOOD MANUFACTURES IN THE PUNJAB.—An interesting monograph on wood manufactures in the Punjab, drawn up by Mr. M. F. O'Dwyer of the Civil Service, has been published by order of the Government of that Province. Mr. Fanshawe, the Officiating Secretary, remarks on the historic fact that before the British occupation the demand for articles manufactured from wood was very limited even in buildings, carved doors and windows were confined to the houses of the well-to-do, and the furniture was scanty. It is, therefore, satisfactory to find that the native workers in wood have been able to meet the considerable demand of European and native customers which has sprung up under our rule for furniture, carriages and carts, and is able to supply the requirements of a population growing in wealth and civilization. The principal supply of timber comes from Kashmir, the Native States of the Punjab, and Afghanistan. Of this imported timber, the deodar is the most costly. It is half the price of Burmese teak in Bombay, but it is double the cost of pine and other woods brought down the rivers into the Punjab. The shisham and the tún are indigenous trees, the wood of which is as costly as deodar. The former resists the white ant, and it is mentioned that a cubic

foot of it weighs 68 pounds when green. The shisham is found in the Himalayas at a height from 2,000 to 3,500 feet, and is cultivated universally on the plains. The wood is hard and of great durability. The colour of the heart-wood is dark bay ; it is used for furniture, boat-building, and camel-saddles and the like. Seeing that this wood is obtainable in the Punjab at half the price of teak, it ought to attract the attention of Mr. Wimbridge and of builders in Bombay. The consumption of timber in the Punjab shows a tendency to decline, owing to the increased use of steel sleepers on the railways and of iron rails for carrying roofs. The value of the imported timber other than firewood is a little over ten lakhs. The foreign trade has got into the hands of monopolists, and there is a general complaint that wood is getting scarce and dear. Nevertheless, the Forest Department has some three lakhs worth of timber left on its hands, showing that the high price is not due to scarcity of the raw material. In Simla the timber trees are being extirpated to supply fuel to the summer capital, but in the Punjab generally the supply is more than equal to the demand, the walnut alone being difficult to obtain. The carpenters form a caste numbering 84,000. The village carpenter lives from hand to mouth. He is paid for repairs in kind, and for new work he receives from 3 to 5 annas a day. His tools are of native manufacture ; there are ten of them, the cost of which is from Rs. 15 to 30. With these he makes the plough, the cost of which is not more than Rs. 2-12, a yoke for Rs. 1-12 and a harrow for Rs. 2-8. A rice-husking machine costs Rs. 5, and a cotton-cleaning machine Rs. 1-12. The cost of a Persian wheel is Rs. 40 to 50, and that of a sugarcane crusher Rs. 45. As Mr. O'Dwyer remarks, these prices do not afford a large field for competition by machines of greater efficiency and improved construction. The attempt to introduce a machine of superior type has only proved a commercial success in the case of sugar-cane crushers. The export of wheat from the Punjab has, in doubling the price of grain in the local market, doubled the rate of wages for all kinds of work. We leave to the political economists the task of reconciling this coincidence with the orthodox theory that the rate of wages is not appreciably influenced by the rise and fall of the price of food, but depends upon the supply of labour in the market. The wages of a carpenter at Delhi range between 3 annas and one rupee per day. The Punjab carpenters, if they are forbidden to copy European designs—which they are generally asked to do—can turn out very pretty things. Two workmen from the province are employed at the instance of Mr. Kipling at the

Kensington School of Art. There is a small but growing export trade in wood carvings. This class of work has not as yet made itself known in Bombay, where wood-carving, once so flourishing, is now a decaying art.—*Bombay Gazette.*

THE SPROUTING OF SEEDS.—We take the following condensed summaries "On the influence of certain conditions upon the Sprouting of Seeds," from the July *Bulletin* of the Agricultural Experiment Station, Cornel University, Ithaca, N.Y.

Influences of constant and variable temperatures.—Different results are obtained from the same sample of seeds under different variations of temperature, of which the daily mean is essentially the same. Sprouting takes place more quickly under an essentially constant temperature of about 74° than under a temperature ordinarily variable, which gives about the same mean. Rapidity of sprouting is particularly marked in beans and peas. As the mean temperature becomes lower, rapidity of sprouting becomes slower. Greater rapidity of sprouting does not appear to be correlated with greater percentage of total sprouting. Constant temperature of the degree here mentioned, does not appear to give greater percentages of sprouting; at least, the variation in this respect between the constant and variable temperature is no greater than that which is usually obtained from tests conducted under identical conditions. In the seven tests with beans, however, there is an average gain of 5 per cent. in favour of those under constant temperature.

Influences of different quantities of water upon sprouting.—The quantity of water applied to seeds under test may make a remarkable difference in the results. Sprouting is decidedly more rapid in tests which receive less than the usual amounts of water given in green-houses. This is markedly the case in all the tests, with the exception of three indifferent and comparatively unimportant instances. Percentage of sprouting is much greater, as a rule, in the drier tests. The addition of water above the amount to keep the earth simply moist, is injurious. The wide differences between the results of the wet and moist tests are not necessarily due to the rotting of the seeds in the wet tests. This is shown in the tests with cucumber seeds, in which the drier tests gave similar or even smaller totals than the wet tests.

Influences of the soaking of seeds before sowing.—Great gain in rapidity of sprouting, counting from the time of planting, may be expected as a rule, if seeds are previously soaked in water; and the longer the seeds are soaked, within reasonable limits, the

greater is usually the gain in rapidity of sprouting. This fact is interesting, in face of the experience that very profuse watering after sowing gives an opposite result. This gain in rapidity of sprouting in soaked samples is really fictitious, however, inasmuch as germination actually begins in the soaked seeds before the dry samples are sown. In truth, the soaked seeds are sown earlier than the dry ones. If this advance in period of sowing is added to the date of sowing of the dry seeds, it will be found that dry seeds, as a rule, sprout fully as early as soaked seeds, and many times much earlier. Total amount of sprouting does not appear to be influenced by soaking. Similar results are not to be expected from all species of plants.

Influences of character of soil upon sprouting.—Variations in results of testing may sometimes be expected in consequence of character of soil in which the tests are made. In the present instance, two results in potting soil as compared with tests in sand, appear to be due to the greater amount of water held in the earth, causing the seeds to rot. The results may, therefore, be studied in connection with those upon the influence of varying amounts of watering.

THE CULTIVATION OF GRASS.—Government having lately sanctioned the discharge of the grass-cutters of the Batteries at St. Thomas's Mount as an experimental measure, and substituted the issue of hay in its place, a new industry presents itself to the public, but more particularly to that class already engaged in agriculture. It is a recognised fact among practical horsemen all the world over that domestic or stable horses do better on hay than on green grass. In no country in the world is daily cut green grass given to horses except perhaps in India. This is not from choice but necessity. The cultivation of hay in India cannot be said to be novel. The late General Ottley and Doctor Pritchard both proved the fact that first-class hay can be cultivated, and, though they made it pay as an industry, the selling price, Rs. 40 to Rs. 60 per ton, was in excess of the time-honoured grass-cutter method: hence it did not find favour with the public. The yearly losses by anthrax among Government horses, caused by grass-cutters' grass, and incontestably so proved, has forced the State to alter its method of foraging. In Bengal, the North-West, and the Punjab, *rakhs* are being formed and fenced for the growth of natural grasses; in some cantonments parade grounds are conserved and cultivated on the lines laid down by the late Sir Herbert Macpherson. It is a mistake to suppose that only culti-

vated Hurdia, *Cynodon Dactylon*, can be made into hay. There are numerous other grasses abounding in Southern India that cure into good, sound and nutritious hay. In this connection I recommend those interested in the question of hay culture as an industry to get Mr. T. J. Symond's book on *Indian Grasses*, published by Messrs. Higginbotham and Co., Mount Road. I see no reason why every horse-owner should not feed his horses on hay in preference to green grass ; the difficulty hitherto has been its scarcity and high ruling prices. We have only to look at the sewage farms at Madras and the parks to know what can be done. Given the same conditions—sun, moisture and manure—I see no reason why any acre of good ground (with facilities for irrigation) in any part of South India should not yield from Rs. 40 to Rs. 50 per year. From five to six crops can, under favourable conditions, be secured in a year. I feel sure if this industry were once established it would extend, a supply would be created, and not only would horse-owners benefit, but the poor starved cattle would secure during the arid months some nourishment, and disease would be more or less prevented. As regards the natural or uncultivated grasses, a good fence is absolutely necesssary. The coarse grasses from time to time must be rooted out, and an occasional dressing of manure would improve the quality and quantity.—*Madras Mail.*

FORESTRY AND THE CHAMBERS OF COMMERCE.—At the concluding sitting of the annual meeting of the delegates of the Chambers of Commerce of the United Kingdom, held on Thursday morning at the Hôtel Métropole, under the presidency of Colonel E. C. Hill, M.P., Mr. Harper, Southampton, moved a resolution in favour of the establishment of an English School of Forestry, and, in doing so, said that this country was almost the only civilised country in Europe which had no established school of forestry. The age of iron, it was true, had to some extent, superseded timber, but still the necessity for forest cultivation existed in the interest of the country and of commerce. Such a school as that which he advocated might be established at a very small cost, something like £5,000 a year, and the result in a very short time would be considerable profit from the extended cultivation of forest trees. Sir John Lubbock, M.P., in seconding the motion, said he hoped it would commend itself to the unanimous approval of the Associated Chambers, but there were two objections which were sometimes raised to the proposal. The first was, that forestry was a matter which ought to be left to private enterprise. He was

always anxious that wherever practicable matters of commercial interest should be left to private enterprise, but forestry was a subject in which it was absolutely necessary that the Government should render assistance. The second objection was that, after all, this was not a forest country. This was not correct, because they had in Great Britain and Ireland 2½ million acres of woodland, and the difference between having those acres well managed and badly managed would pay the cost of the instruction advocated over and over again. There were also millions of acres in Scotland and Ireland which might be planted with forest trees with great advantage. So far from having a small interest in the question, he thought there was no country which had a greater interest in the training of young men in schools of forestry than this. In advocating a forest school he did not mean that any new institution should be created. The committee upon which he sat avoided committing themselves to any definite proposition of that kind, because they felt that such a school might be well added to some of the existing institutions. There was a growing difficulty in providing for all our young men, and under the circumstances it was a great pity that whenever foresters were wanted for India or the Colonies it should be necessary to take gentlemen trained in foreign schools. The resolution was adopted unanimously.—*Timber Trades Journal.*

FUEL AND FODDER RESERVES IN MADRAS.—The importance of the formation of Fuel and Fodder Reserves along Railway lines having frequently been mooted by the Government of India, the Government of Madras called upon Mr. A. W. Peet, the Acting Conservator of Forests, Northern Circle, to supply the necessary report upon the subject. Mr. Peet sent round a circular to all Collectors, except Ganjam and Vizagapatam, to draw the particular attention of the District Forest officers to it, and to inform them that the principal idea in view is for the supply of fuel and fodder for military purposes, and not engine fuel for railways. The following is the substance of their reports :—The District Forest Officer, Kistna, states that there are two railways in his district, Bellary-Kistna State Railway and Nizam's State Railway, both of them being under construction. Along the first-named line the reserved lands and proposed reserves cover an area of 5,000 acres. The condition of the hills and lands is good, and with a little care and foresight a good deal of fuel and fodder could be raised. With regard to the Nizam's State Railway the areas available are about 50,000 acres. The condition of this portion

is even better than the other, being capable of great improvement as to the production of fuel and fodder. The Collector of Cuddapah states that the Madras Railway possesses about two miles of eleven reserved forests between Balapolle and Chegar river, and that ample provision has been made for the purpose along this portion. The Collector of Kurnool reports that the Bellary-Kistna State Railway Branch is the only line in the district, and it passes through the forests of the Yerramalais and Nallamallais. The selection of reserves in the former has not been completed, but most of the available lands in the Ramallakot taluk and lying near the railway stations have already been proposed as reserved forest. Three hundred acres of waste land containing small babul trees and adjoining Taggali station, and 200 acres of Yeppi growth near Malkapuram station, might be taken up for the supply of fuel. As an almost inexhaustible supply of fuel and fodder could be had from the Nallamallai hills at Gazulapalli and Diggomitta stations, the Collector hardly thinks it of any use taking up any more land supply as fuel and fodder reserves besides those already mentioned. The Collector of Bellary states that since the receipt of the circular certain areas along the line have been selected and proposed for reservation. The Collector of Anantapore records that there are seven reserves along the railway line running between Tadpatri and Guntakul, and that there are no more reserves available for reservation along this line.

EFFECT OF MANURE ON FRUIT.—The chemical composition of fruit can be changed by the fertilizers applied to the trees and vine producing them. It has been found that the quality of fruits can be greatly improved by the judicious application of fertilizers, and that the percentage of sugar contained in them can be largely increased. The increase obtained is more marked in the case of wild fruits. Professor Goessman performed some very interesting experiments in this direction. Several Concord grape vines and several wild purple grape vines were set in pots and fertilized at the rate per acre of 450 pounds of dissolved bone black, containing 12 per cent. of soluble phosphoric acid and 180 pounds of nitrate of potash, containing 45 per cent. of potassium oxide and 13 per cent. of nitrogen, 52 pounds of soluble phosphoric oxide and 22 pounds of nitrogen. One-half of the fertilizers were applied in the outturn and the other half in the spring. Three years after the application of the fertilizer an examination of the fruit was made and compared with that of fruit from the same kind of vines on land which had not been fertilized. It was

found that the sugar in the Concord grapes from vines unfertilized was 13·89 per cent., while that in grapes whose vines had been fertilized was 15·43 per cent. The sugar in the wild purple grapes from vines unfertilized amounted to 8·22 per cent., while that in grapes from fertilized vines of the same kind was 13·67 per cent.—a very remarkable increase. The most notable change of the mineral elements noticed in the grapes was an increase of potassium oxide and decrease in the calcium oxide. These experiments indicate that there is a wide field for experimentation for the improvement of the quality of the fruits by the skilful application of fertilizers. The quality of apples grown upon trees that are well fed with all the fertilizing elements needed is decidedly superior to that of apples raised upon trees which have not been fertilized. "We have implicit faith in the truth of the above theory," says "Southern Planter." This theory is the explanation of what most men have seen in fruit raised on a farm, and what all fruit men practise upon in selecting land for orchards. Like flowers, fruits, especially apples, are apt to have their colour depend greatly on the constituents of the soil. It is an old recipe for deepening the color of roses to apply charcoal. We have seen it apparently succeed. All fruit men know that the Wine Sap, a deep red apple, is better and redder in the deep red clay of Piedmont; and its colour and superior flavour on the red foot-hills of the southern slope of the Blue Ridge may be attributable to the iron in the soil and the potash in the rocks. We believe that it is this which makes the peaches and grapes of these high, gravelly foot-hills more delicious in flavour and brighter in colour than those of lands with quartz rocks. In Virginia, at least, there is a well-defined difference in the colour and flavour of the fruit in different localities, and these differences are as plainly indicated as the chemical differences in the soils of the different localities. For the production of wine, the quantity of sugar is the most important consideration.—*Pennsylvania Farmer.*

TREATMENT OF SWAMPY SOILS.—It is passing strange how little is made of natural advantages in Indian agriculture. The Nilgiri swamps, even after three-quarters of a century of occupation, are in a state of nature. Some few are worked for peat, an unpopular description of fuel, where there is so much cheap firewood available. Others are conserved as feeders to our springs of water, a function they would perform equally well, if not better, if drained and cultivated. Within the station a few swamps are converted into market gardens, and in a season of drought these are smiling

fields when all around is parched up. But the area so utilised is very limited. The soil of peat swamps is surfeited with vegetable matter in a condition not soluble, and therefore not assimilable as plant food, rather injuring than benefiting the crops grown. The proper treatment of such soils must depend upon an intimate acquaintance with their chemical constituents, but methods of popular treatment are not the less known and can be applied. It is in omitting to adopt such, that the agriculturist shows a want of enterprise. Liming the soil is the best method of setting free its valuable mineral and organic constituents and rendering them available as plant food; lime is slow in its action. It imitates nature in its processes, and is therefore the safest and best agent to employ, but it is expensive. There is a speedier means of doing the same thing, one less efficient but cheaper, namely, burning. It is doubtless wasteful, for the liberation of nitrogen is almost instantaneous, and valuable matter is driven off in too great quantity; but peaty and clayey and stiff soils have an abundance of this element, and can afford to lose a good deal without forfeiting their character for fertility. Of course, burning can only be done in small sections, but systematic treatment will in time ensure its benefit to the whole field or a large portion of it. Burning has, moreover, a mechanical effect in preparing the soil for more ready and complete aeration, which nature will perform. This is now facilitated by turning over the sods with a spade, and allowing them to disintegrate and crumble away by the alternate action of heat and cold; but the operation is only partially performed, as the spade is not carried deep enough down, and the result, with imperfect drainage, is unvariably a water-logged field that causes vegetation to sicken and droop. The importance of drainage is, we think, understood by the ryot. Swamps at the commencement of cultivation are parcelled into fields by drains hardly 18 inches deep, and of scarcely sufficient gradient to admit of the water flowing off; and even these shallow drains are afterwards allowed to silt up and choke the flow, the best of the hill-side cultivation running on to the swamps, and remaining there a loss all round.—*South of India Observer.*

TRANSPLANTING.—No tree can be taken from the ground, says O. L. Williams in *Pennsylvania Farmer*, without more or less mutilation of the roots. In most cases this is very severe. When a root is cut, bruised or broken, nature immediately sets to work to repair the damage, and heal the wound. This is done, as any close observer may notice, by callus formations, or a deposit over the

wound of a soft and spongy bark. Now this healing process progresses much more rapidly during the winter and spring months than at any other season of the year. I have seen roots nearly half an inch in diameter, which being cut off smoothly in the fall were almost entirely healed over by spring. From these callused wounds, rootlets will start sooner and more rapidly than from any other point. Of this fact, there need be no doubt, as every planter of any considerable experience must have observed time and again. Now if wounds callus over during the winter, and if rootlets start more readily from the soft and spongy bark at these points than elsewhere, is it not evident that the fall-dug and fall-planted tree has a decided advantage over the tree dug and planted in the spring? I should remark right here, that often, or perhaps generally, the leaves and branches of a tree planted in the spring will begin to show signs of growth before the fall-planted, but this does not prove that it is doing better than the other. Why not? Because a tree that is cut down will often do that, but it makes no root, and the root is the life of the tree. Again, every tree in being transplanted receives a check upon its vitality. The fall-planted tree recovers to a great extent from the check before the spring planted receives its check. One great point in planting a tree is to place the roots in a perfectly natural position, and to get the earth firmly among them, filling every particle of space. Now even if this matter has been carefully attended to, it is still more thoroughly accomplished by the action of the frost and the springs rains. Such a tree sets firmly and needs no staking. A tree thus planted is in its proper place at the proper time in the spring to begin its season's growth when other vegetation starts, and ninety-nine times out of a hundred this is weeks before the spring planted tree is dug. I would not have anyone think that I intended to convey the idea that spring is not a proper time to plant fruit trees. Spring is a proper time, but it is not the only time or the best time if my observation is worth anything. Now I have had my "parley," and have given some of the reasons why I prefer fall-planting, yet I expect to keep right on selling fifty to one hundred trees in the spring to one in the fall, because people are bound to stick to it that "the reason he advises this plan" (fall-planting) "is that he may sell in the fall nothing more or less."

THE BAMBOO INDUSTRY IN EUROPE.—This industry, which originated in Great Britain, is now developing also on the Continent. Several Dutch firms have commenced the manufacture of bamboo furniture, which can be made very cheaply in Holland, as

her Indian colonies abound in the raw material. That the art of making graceful ornaments and household articles of bamboo has made rapid progress in Holland was quite recently shown at a special exhibition of artistic furniture held at Haarlem. Two or three manufacturers are now exporting their goods to France, Germany and England.—*Indian Engineering.*

INDIA-RUBBER INDUSTRY OF UPPER BURMA.—The trade in this commodity was first brought to the notice of the Local Government so far back as 1870, and its export to the Lower Provinces did not commence till 1873, when the monopoly was leased under the Burmese King to Chinese firms, who superintended the works. The sale then averaged from Rs. 90,000 to 1,00,000, but under the present *régime*, the annual outturn is improving, and the industry becoming more important. The forests producing India-rubber occupy an extensive Kachin district north of Mogoung, and stretching east across the Chinese border, and the importance of this industry was first reported by Mr. Warry of the British Consular Service in China. The Kachins were at first extremely jealous of interference with their trees ; and although they at first made a mistake of over-puncturing them, they are more careful now. Trees may even, at the present time, be seen punctured to the tenderest branches, but they do not appear to be drained to the extent of half their yielding power. Mogoung is the central town of the industry ; four-fifths of the annual supply is brought in there by the Kachins in the employ of the Chinese lessees ; the remaining is purchased by agents on the spot. The practice is for the lessees to make liberal advances to the Kachins to meet their expenses during the collecting season ; and when the produce is brought in, the refund is made by selling the rubber to the manager at half the market value. The Kachins, as a rule, are not very honest in their dealings, as they generally place stones inside the rubber balls to obtain a better weight, but better inducements lately are bringing in purer rubber to the market. It has also been found that the travelling agents of the lessees are very dishonest in cheating the producers by decreasing the weight as much as 60 per cent., and as the Kachins have no standard weight, these agents benefit considerably. Before the British occupation transit of rubber was subject to a tax by the chieftains of the different States through which the commodity passed, generally 10 per cent., *i.e.*, ten balls were given for every 100 conveyed, but now things have changed, and an *ad valorem* rate of 10 per cent. on the value is charged. The Kachins are very particular as to the rights of

extracting the rubber from their forests; and, as an instance of this, some 200 Chinese labourers were brought in by the lessees two years back, with the result that the Kachins started burning the forests and driving out the intruders. The trade is now yearly flourishing, and the revenue derived is increasing; the produce of the past year was 2,834 bags more than the previous one.—*Indian Engineering.*

THE COCOANUT PALM.—From a very interesting *brochure* on the cocoanut palm, which has recently been published at Madras by Dr. Shortt, formerly Surgeon-General in the Madras Army, it appears that when George Herbert wrote:—

"The Indian nut alone
"Is clothing, meal and trencher, drink and can,
"Boat, cable, sail, and needle, all in one,"

he was not taking poetic license, for the cocoanut palm supplies man with starch, sugar, oil, wax, wine, resin, astringent matter, edible fruit, fibrous tissue (coir), ornaments, utensils, food for cattle, clothing, &c. It grows best in an alluvial and loamy soil on the sea-shore, and when about 80 trees are planted to an acre. It is indigenous to India, but grows throughout the South Seas and in Brazil. It has been estimated that there are 280,000,000 trees in full bearing in the world. In South America there are 1,000,000 acres under the cocoanut palm, in Ceylon 500,000, and in British India 480,000 acres. The export trade of Ceylon in all cocoanut products is worth £800,000 per annum. A single tree in India is put down as being worth a rupee a year, omitting the profit from the fibre and from the green and dry fronds. Taking bearing and non-bearing trees together, the average number of nuts produced is about 100. A large number of trees are bled for "toddy," the sap which comes from the flower spathe, and which when fresh has a pleasant, sweetish taste, but obtains a sharp acid taste after being kept a few days and allowed to ferment. If kept longer it passes in to the various stages of fermentation of spirits and vinegar. It is generally used for yeast and is also boiled for sugar. The outer skin is used for fuel when dry, or is cut into a substitute for scrubbing-brushes. The shell of the ripe fruit is hollowed out by filling it with salt water and burying it in the sand for a time, when the kernel rots and is washed out, and the shell can then be used as a vessel. It is sometimes beautifully carved into cups, bottles, lamps, ladles, &c. The kernel or flesh is often cut into the shape of flowers or fruit, and worn in the hair or formed into garlands for the neck by the Hindoo women. The oil

is much used for making candles, and, owing to the chemical changes which take place, is called stearine, and is also, after treatment, used as hair oil. The wood of the tree is turned to a great variety of purposes, for it is hard, durable, and looks well. It is known as porcupine wood, and is used for veneering. The hard stem is converted into drums, gutters, water-pipes, boats, rafters, walking sticks, &c. It takes a high polish so as to resemble agate, and is supposed to last 50 years. The roots are masticated by the natives with betel as a substitute for areca nut. Insects, rats, squirrels, a kind of cat and dog, and a flying fox all do much damage to the tree or fruit. In ten years the trade of the Madras Presidency alone in cocoanut produce amounted to about 816 lakhs of rupees, the nuts producing 145, the kernels 127, the oil 306, and the coir fibre 237 lakhs. Dr. Shortt adds that the name cocoa is a contraction of *Macaco*, the Portuguese word for monkey, which seems to have been applied to it because of the supposed likeness of the end of the nut, with its black scars, to the face of a monkey.—*Madras Mail.*

GUTTA-PERCHA LEAVES AS ROOF TILES.—These impregnated leaves are mostly intermixed two or three-fold in a manner that their fibres cross each other. By this means a thin elastic wooden plate of great power of resistance is formed, which always retains its original form, and, on account of the firmness of the sticking material used, is neither affected by the change of temperature nor weather, and may even be exposed for a considerable time to boiling water without effecting a separation of the leaves. But for the purpose of still further strengthening their power of endurance, their outer side is spread over with tar, and further covered with a layer of warm asphalt, hardened by impressed small gravel, whereas the inner side is protected against the risk of fire by the addition of a non-conducting matter. The advantages of this style of roofing consist in the thinness of the plate, compared with the necessary application of ordinary zinc roofs, as well as in the lighter weight. Whereas, for example, a card-board roof, which was hitherto considered as the lightest, weighs, including the material for fastening, 38 lbs. per square metre of roof surface, the gutta-percha or India-rubber plate, prepared as above described, has a weight of only 14 lbs. per square metre. As the plates are, moreover, very large, there is no need of any further protection, and they are merely nailed down upon laths placed at a proportionate distance from each other ; there is consequently a considerable saving of both labour and cost, and yet the gutta-percha

roof can be used without support for a comparatively long surface, because its power of resistance against pressure or breaking is most remarkable.—*India-rubber and Gutta-percha Journal.*

MANURE FOR GRAPE VINES.—Good stable manure thoroughly rotted is the best invigorator for grapes ; whether organic fertilizers are best for health and longevity of the vine is another question. Application of bones to the grape border is of the greatest importance, as careful examination of the roots will prove. Ground or broken bone is preferable to the material in an unbroken condition, as it allows of a more even distribution and hastens disintegration. Vine roots, however, will push a long distance in a straight line to obtain this much-coveted food. Some years since in removing a vine it was found that the roots on one side were much stronger than the others, and curiosity as to the cause instigated a careful search for the extremities or feeding rootlets. After several feet had been uncovered, the bones of a dead animal were unearthed, but they were so completely covered with a perfect network of small fibres as to be almost indistinguishable. These rootlets had penetrated into every crack or inequality of the bones, which evidently had been of great service as food for the plant. Beyond question iron in the soil is of great benefit for colouring the fruit. Iron filings and turnings answer an excellent purpose, and the effect may be noticeable the first season after application. Above all else the sweepings of a blacksmith's shop have given excellent results, as we then secure manure in a concentrated form and of a variety of constituents ; the horse-droppings, hoof-parings, iron-filings, &c., combine to form a powerful fertilizer. Perhaps no other plant is more quickly benefited by the contents of the wash tubs every week. It is a mild solution of potash, and appears to be greedily absorbed at once. A plentiful allowance of wood-ashes forked in the soil in spring pays well in the crop of fruit. It may not destroy mildew on the foliage as some claim, but it will certainly invigorate the plant.—*New York Tribune.*

COCOANUT BUTTER.—The trade in cocoanut butter, unknown a year ago, has assumed during the past few months dimensions which may fairly be described as extraordinary. The discovery that the cocoanut contained a nutritious fatty substance admirably adapted as a substitute for butter was made in 1888 by a practical chemist at Ludwigshafen, near Mannheim, in the Rhine country. This chemist, Dr. Schlunk, found on analysis that the milk of these nuts contains some 60 to 70 per cent. of fat and 23 to 25 per

cent. of organic substances, of which 9 or 10 per cent. is albumen. Liebig had long before this discovered the value of cocoanut oil or fat, but did not succeed in getting from it anything like a butter substitute. The credit of this discovery belongs exclusively to Dr. Schlunk. The new butter made under his process is found to contain on analysis 0·008 per cent. of water, 0·006 per cent. of mineral stuffs, and 99·9932 per cent. of pure fat. It is pleasant to the taste and smell, is of a clear whitish colour, something between our buffalo butter and the tinned article imported from France, and can be sold at considerably less than half the price of ordinary butter. It is described as singularly free from acids, easily digestible, and incomparably healthier and better as an article of diet than the cheap poor butters and oleo-margarines with which the European and American markets are flooded. The nuts required in this new industry are imported from India into Germany, where the largest cocoanut butter factories are in operation in steadily increasing numbers, and supplies are also obtained from the South Sea and Coral Islands, Arabia, the coast countries of Africa and South America. One firm alone in Germany is now turning out between 3,000 and 4,000 kilos. of butter per day, the bulk of which is exported to America, where already a large demand for the article has sprung up.

A NEWLY-DISCOVERED DUTY OF FOREST OFFICERS!—Although the Burmah Forest Department has existed for some thirty years in the Lower Province, and in the Upper Province since its annexation, it has done nothing to improve the sanitation of the malarious districts, which causes fearful mortality among the officers in the Government service. The Department is manned by a large number of educated gentlemen, who have received a scientific training in Europe, where, especially in Italy, steps have been successfully taken to ameliorate the indifferent climates of certain localities by planting and draining; and it is nothing but fair that the Forest Officers in Burmah should devote their attention to this important subject. The *Eucalyptus* has been known to improve feverish climates, and has been successfully tried in Algeria and Italy. There is no reason why experiments should not be made with it in the malarious districts in Burmah. Then there is the common sunflower plant, which is said to possess similar virtues, and this could easily be tested by distributing a few pounds of seed to the police stations. Besides its medicinal properties, the leaves of the plant are useful as fodder, while the seeds give out good oil for burning purposes. It would stimulate the Burman

to extend the cultivation by-and-by. But unfortunately the Forest Department does not concern itself with any other branch of the administration except that of producing revenue. It is a well-known fact that the number of officers and men who have been killed or wounded in Burmah during the last few years, large as it is, is very small compared to those who have fallen victims to the deadly climate of the Province. Order and peace have now been restored, and the local Government would do well to turn its attention to the health and comforts of its employés, and with a little care and attention render the towns in the interior as healthy as Rangoon itself is.—*Rangoon Times.*

A SUBSTITUTE FOR COAL.—Petrole is the name given to a manufactured substitute for coal made by a firm in Minneapolis, and is the direct outcome of the scarcity of fuel, which has retarded the birth of manufacturing industries in that city, and, in fact, the whole North-West. It is made from sawdust, the residuum of crude petroleum, and a number of other ingredients, which are not made known by the inventors. The residuum of petroleum is mixed with the other material, and is heated in a large sheet-iron tank to 400 deg. Fahrenheit. It is then run into a mixing machine, where it is thoroughly mixed with the sawdust, and is afterwards carried by means of a chute to a heavy press, where it is subjected to a pressure of 1,000 pounds to the square inch, and moulded into blocks 10 inches long, 4 inches wide and 3 inches thick. It is claimed for this new fuel, which has been successfully tested, that it is cheaper, and its results as satisfactory in every way as coal.—*India-rubber and Gutta-percha Journal.*

CHINESE FLOATING GARDENS.—In a recent number of the *China Review*, Dr. Macgowan describes the manner in which floating fields and gardens are formed in China. In the month of April a bamboo raft 10 feet to 12 feet long and about half as broad is prepared. The poles are lashed together with interstices of an inch between each. Over this a layer of straw an inch thick is spread, and then a coating 2 inches thick of adhesive mud taken from the bottom of a canal or pond, which receives the seed. The raft is moored to the bank in still water, and requires no further attention. The straw soon gives way and the soil also, the roots drawing support from the water alone. In about 20 days the raft becomes covered with the creeper (*Ipomœa reptans*), and its stems and roots are gathered for cooking. In autumn its small white petals and yellow stamens, nestling among the round leaves,

present a very pretty appearance. In some places marshy land is profitably cultivated in this manner. Besides these floating vegetable gardens there are also floating rice fields. Upon rafts constructed as above weeds and adherent mud were placed as a flooring, and when the rice shoots were ready for transplanting they were placed in the floating soil, which being adhesive and held in place by weed roots, the plants were maintained in position throughout the season, The rice thus planted ripened in from 60 to 70, in place of 100, days. The rafts are cabled to the shore, floating on lakes, pools or sluggish streams. These floating fields served to avert famines, whether by drought or flood. When other fields were submerged and their crops sodden or rotten these floated and flourished, and when a drought prevailed they subsided with the falling water, and while the soil around was arid advanced to maturity. Agricultural treatises contain plates representing rows of extensive rice fields moored to sturdy trees on the banks of rivers or lakes which existed formerly in the lacustrine regions of the Lower Yangtsze and Yellow River.—London *Times*.

A New Antiseptic Paint.—Messrs. Stohmann and Treusein of Hamburg have taken out a patent for a preparation called *Carbolineum avenarius*, composed, it is said, of various septic substances, which, it is affirmed, when applied to wood as paint (the colour being a fine walnut) does not stop up but impregnates the pores, and thus preserves even unseasoned wood. In the railways in Germany its value when applied to sleepers and other underground wood-work, as well as to wooden buildings, rolling stock, &c., is recognised. In South America also the efficacy of *Carbolineum avenarius*, in protecting timber from white ants, has been proved. We quote the following :—"Two boards cut from one and the same piece of pine, one of which for the sake of experiment was painted with *Carbolineum avenarius*, and the other left unpainted, were buried, and after a lapse of three years dug up and examined. The result was that the wood to which the *Carbolineum avenarius* had been applied showed no signs of decay, whilst the other was found to be in a rotting condition." This is much like "Kyanizing," with which Dr. Elliott tested two pieces of wood with similar results. It might be worth the while of our railway authorities making a trial of the *Carbolineum* paint, which seems to be used for railway sleepers, as well as for timber required in ship-building. Besides its preservative qualities, it is said to be a good disinfectant.—*Indian Agriculturist*.

BUTTER FROM COCOANUTS.—Consul Monaghan of Mannheim, in one of his reports, gives an interesting account of cocoanut butter, a fatty substitute for butter, which is now displacing oleo-margarine and genuine butter in Germany. The practicability of making a substitute for butter from the meat of the cocoanut was discovered by Dr. Schlunk, chemist of Ludwigshafen. It has been manufactured for a year at Mannheim. The daily production is 3,000 kilograms of butter, which sells from 13c. to 15½c. per pound. With real butter at from 25c. to 35c. a pound, the cocoanut imitation grows rapidly in the public estimation. It is of a clear colour and agreeable to the taste. The poor use it on their tables in place of the genuine article, but those able to be fastidious use it chiefly for cooking purposes. It is free from the acid so often found in real butter and is more wholesome. As it is free from the suspicion that attends butter made from the milk of cows affected with tuberculosis, it is much to be preferred to some kinds of butter in the market.—*Englishman.*

CEYLON FOREST DEPARTMENT.—The Ceylon Government contemplates issuing rules for the working of the Forest Department, whereby the respective spheres of responsibility of the Government Agent and the Conservator of Forests will be defined with more precision.

CAUSE OF SPONTANEOUS COMBUSTION IN HAY.—An interesting discovery in regard to the heating of hay is reported to have been made by Professor Cohn, the celebrated Breslau botanist. As the result of a series of exhaustive experiments, he has found that the heating of masses of damp hay to a temperature, resulting in spontaneous combustion, is caused by fungus. He first examined the thermogenous action of the *Aspergillus fumigatus*, a plant having an evil reputation for causing illness, and which occasions the heating of sprouting barley. Through the breathing of the small germ—that is to say, through the combustion of the starch and other coal hydrates, which are changed by diastatic fermentation into maltrose and dextrine—an increase of temperature to about 40 deg. C. follows, when the germs become stiff and heated, a condition in which they soon die. A heating of the germs to over 60 deg. C. takes place only when the fermentation activity of the *Aspergillus fumigatus* sets in, and this exhibits its highest development and action in temperature above blood heat, in which state it rapidly consumes the coal hydrates. Of all the actions of the fungus, and these are of an extremely manifold character, this

action of the *Aspergillus fumigatus* is probably one of the most singular.

SILICA IN THE STEMS OF GRASSES.—The generally accepted theory that the strength of straw is dependent on the amount of silica it contains is now proved to be wrong. Dr. Gilbert, a practical chemist, found from analyses of ten samples of wheat and twelve of barley—all of different seasons or different manuring—that the proportion of silica is as a rule not higher in the straw of the better grown and better ripened crops. In both the wheat and barley the percentage of silica in the straw ash is under all conditions of manuring much the lower in the better seasons. With the wheat under each condition of manuring, and with the barley under most conditions, it is considerably lower in the better seasons. Dr. Gilbert concludes that the high percentage of silica means a relatively low proportion of organic substance produced, and the strength of straw depends on the favourable development of the woody substance, and the more this is attained, the more will the accumulated silica be, so to speak, diluted.—*Indian Agriculturist.*

UTILIZATION OF PEAT SOILS.—Peat soils, which are practically pure peat, would be found, when dried and broken up fine, a first class absorbent for urine and manure in the stock stables. When composted after removal from the stables, such manure is of the greatest possible value for top-dressing gardens and such crops as barley, which feed mainly in the surface soil. Where straw is scarce, dry leaves from the groves or timber furnish very good litter for "bedding" horses; and as this material speedily decomposes when charged with liquids from the stables, it soon makes a most active fertilizer. Both of those absorbents are much better than the sawdust from lumber mills, which is being largely used in some places, as the latter material does not readily rot and become suitable for manurial purposes.—*Indian Agriculturist.*

SCARCITY OF GUTTA-PERCHA.—Gutta-percha has become scarce in Borneo, and it now stands low in the list of jungle produce exported from the Lampong districts in Sumatra. Formerly, the gutta was obtained there from cuts in the trunk of the tree. When the demand grew brisk and prices rose high, the collectors set recklessly to work to fell every gutta-yielding tree. They reaped heavy gains, but soon the supply fell off and profits grew smaller and smaller. Taught by experience, the collectors now

only tap the trees, but the surviving ones are too young to yield much, as they take some 40 years to become full grown. Grafting has been resorted to for increasing their number. Each gutta tree has now a permanent owner who taps it only twice a year.—*Indian Agriculturist.*

DISAFFORESTING IRISH WOODLANDS FOR MATCH-MAKING PURPOSES.—The woods and surroundings of the Vale of Avoca, county Wicklow (immortalised by Moore in his "Sweet Vale of Avoca"), have been purchased by an English Match Company. The vast area of timber included in the purchase extends from Ballycooge Steps to Castlemacadam Church. The proprietor, Mr. Butler, of Bray, has completed the deed of purchase for £6,800. The company will start a large saw-milling concern by converting the mill premises owned by the executors of the late Mr. John Kinsella to suit their requirements. They have four years in which to disafforest this property. It is expected that this company will extend their operations to other parts of Ireland.

GARDNER'S PROCESS OF PRESERVING TIMBER.—We have had a great many schemes for the preservation of timber against the destructive agencies which our variable climate entails, and, though several of them have reached the desired result, it has been at a cost which has practically shut them out of the market. Damp is one of the chief enemies to combat; what is termed "between wind and water" is where the rot first takes place; and to overcome this has been the study of scientists for years past. As we observed, not only must the soft timber for outside use be rendered impervious to damp or other destructive agencies, but it must be done at a price which will enable it to successfully compete with the harder and more resinous woods, which are said to be able to resist decay in their natural state.

If there were any cheap process of kyanising the softer kinds of fir timber to render them insect proof and resist damp, there would be no occasion to resort to the costly woods for their lasting properties; but from the numerous failures that have attended the experiments made in endeavouring to arrive at this result the task evidently is no easy one. In these pages we have frequently had occasion to draw our readers' attention to wood preserving, but amongst the many systems or methods of making timber, if not exactly everlasting, at any rate capable of resisting decay, that have come under our notice, we know of none that surpasses what is known as the "Gardner process." This has now been used ex-

tensively in Glasgow and other large manufacturing centres for some years past, and is admitted by those who have seen it tested to fulfil all the requirements which, for some years, railways and other large companies have been endeavouring to acquire. It renders the wood thoroughly seasoned and damp-proof, besides making it capable of resisting the teredo and white ant. In fact, timber passing through the various stages of the "Gardner method" will be found to contain all the elements of seasoned wood capable of defying dry rot, and four times the density of ordinary wood. Samples were submitted to us for our inspection of timber used for piles which had been preserved in the ordinary way, as well as some that had been preserved by the Gardner method, in which the strength of the latter was shown in its being as little affected by the pile-driver as stone would be, while the old creosoted pieces were partially crushed by the continued action of the driving. This alone would be sufficient test of its superiority over other methods. The efficacy of the Gardner system is exemplified in more ways than one, but chief amongst others is extraction of the sap, and, after the timber is thoroughly seasoned, by no means a tedious affair, the substitution of a powerful preservative or intense poison, which adds to its density, and makes it totally impervious to rot or decay. This is one of the most simple but perfect systems ever brought to the notice of the scientific world, and it cannot fail to be universally adopted as its merits become better known.

We shall not attempt any lengthened description of the whole of the processes of this valuable method, but briefly they consist of five, four of which are alternative.

The ordinary modes of seasoning timber, such as cutting up, stacking (sometimes for years), stoving, &c., only dry the sap, without getting rid of its solids. In this state the sap readily recovers its moisture on exposure to damp, &c., and fermentation follows, its spores spreading dry rot with deleterious odours all around, as may be always observed in old buildings, and too often in comparatively new ones also.

The Gardnerizing process No. 1 consists in seasoning timber by completely dissolving the sap (chemically), without injury of any kind to the fibre of the wood, and thus freeing its pores from the fermentable albumenoids, &c., with their accompanying dangers.

No. 2 is an additional protection against decay. After the removal of the sap as above described, it is in many cases advisable to fill the vacant pores of the wood with a preserving fluid, giving it a positive protection for exposed situations, or for places where dry rot has become firmly rooted and aggressive.

Process No. 2 consists in permeating the cleared-out pores with a strong solution of borax under atmospheric pressure, and thus rendering it insoluble either in fresh water or salt.

No. 3 process is to render the wood non-inflammable. The timber after chemical seasoning (No. 1 process) can, by this process, be rendered perfectly non-ignitable without injury to its strength or natural appearance. The value of this quality for timber building, &c., needs no comment.

No. 4 consists of impregating the wood with poison. This latter process is highly essential for timber to be used in hot countries, India, the Cape, &c. When woodwork of any kind is exposed to the attacks of the *Teredo navalis*, the *Limnoria terebrans*, the white ant, &c., chemical seasoning should be followed by process No. 4, which impregnates the empty pores with a strong solution of corrosive sublimate (bi-chloride of mercury). This most powerful poison is then rendered insoluble in water, fresh or salt, as it would otherwise be soon washed out of the timber.

No. 5 consists in creosoting the Gardnerized timber after chemical seasoning. Redwood will take 20 lbs., and even good solid pitch pine (not capable of ordinary creosoting) has been made to take as much as 12 lbs. of creosote per cubic foot. Any less quantity can, however, be used, as may be required.

The entire management of the Gardner process of preserving wood is in the hands of Messrs. Wilson & Watson, Mr. Watson having given a great deal of time and attention to bringing this system into the metropolis, and introducing it to engineers and contractors. The process will be carried on at the extensive premises of the Woolwich firm, where tanks and all appliances are erected for the purpose. Every convenience for such work will be found at Woolwich, and the advantages of such splendid riverside premises cannot be over-rated. Facilities for the transport of the preserved timber to every part of the world are afforded in the magnificent wharves of Messrs. Wilson & Watson's premises at Royal Dockyard Wharf, where there is a granite frontage of 500 feet; with steam cranes and every appliance for the despatch of goods by water, and we consider better adapted premises could not be selected on the whole of the Thames for carrying on extensive works of this kinds.

In addition to the other advantages there is plenty of sawing power, besides a vast yard stored with wood of all kinds, both English and foreign, with all the modern steam appliances, and overhead gantries for conducting an immense business. Timber can be cut from the rough log into any dimensions required, placed

in the tanks to undergo the seasoning and preserving process; and, after the operation, is in a fit state to be sent to the Cape, India, or any other part of the world in a state to resist the decaying or destroying influences that those climates may bring to bear upon it, as well as to defy the attacks of marine insects, or any other of the wood-destroying insects of those hot regions.

From Mr. Watson's large connection amongst engineers, contractors, and railway companies, coupled with his knowledge and long experience of wood preserving, and the energy he has shown in bringing the "Gardner process" before the trade, we look with confidence to the latter system occupying a prominent position as a wood seasoning and preservative method of dealing with timber of any description. Its simplicity alone would recommend it; efficacious, but not costly, there is every invitation to have timber so treated, even for ordinary housebuilding, from a sanitary point of view, as the wood so impregnated would resist infection if in contact with drain pipes, &c.

There is none of the complicated machinery in connection with the process of preservation that has generally attended other methods which have been dealt with in these columns, and the "Gardner process" looks likely to hold its own in the field of competition which seems to regulate everything now.

Palmyra Timber.—We have repeatedly advocated in this journal a more extended cultivation of the palmyra palm, and have pointed out how many useful purposes may thereby be served. We have been inclined to lay the greater stress on this recommendation, because, owing to many causes, there has of late years been an absence of effort to replace by planting the vast number of these trees which have from time to time been destroyed, either in the course of road extension or for the sake of the price which can be obtained for their timber for construction purposes, locally and for export. It is not, perhaps, generally recognised that this timber is possessed of a strength surpassing that of nearly every other wood. A good many years ago now, very full experiments were made by Mr. Byrne of the Public Works Department to test the relative strength of the varied descriptions of timber either grown in, or imported into this island from abroad. The *modus operandi* of these experiments was as follows:—From the soundest wood obtainable, pieces 2 feet long and of a square inch in section were cut. These were supported in such a way that each piece tried had a bearing of one inch at either end. A special hook of iron exactly fitting on the section, and so made that the

trial weight applied hung exactly below its centre was placed on the wood, and from this was suspended gradually increasing weight until the breaking point was reached. The result was to establish the fact that palmyra was possessed of a pre-eminence in strength even over the finest procurable specimens of Moulmein teak, and, indeed, beyond that of any other of the several woods experimented with. We have heard it stated that the fracturing of the palmyra was attended by a curious circumstance which would doubtless add a value to the use of it for constructive purposes. It invariably gave audible warning of approaching fracture some little time before finally yielding. As is the case with all palms, the structure of the timber is composed of independent fibres, these being embedded in a sort of pith which hardens as the tree approaches maturity until it acquires almost the density of the fibres themselves. These last, in the case of the palmyra palm, look exceedingly like magnified elephant hairs. They are unbroken in their course from the top of the tree to the root, and are laid spirally with a slow twist throughout their whole length. Some of these fibres are naturally weaker than the others, and in every case some of these broke during the experiment cited with a loud and short report some time before the mass of them gave way. From this cause it is always possible to learn when timber is being unduly strained before the final rupturing factor is reached, so affording a warning which might in very many presumable cases prevent serious accident.

In the southern parts of Ceylon this timber has been but little used, for it is comparatively scarce within them ; but in the north of the island it has for centuries been used for roof and bridge construction almost to the entire exclusion of any other timber. The old Dutch residences of Jaffna have roofs framed with it, and unsupported by trusses, of a span which is quite unknown in practice among us here in the South. The adoption of such unsupported space is, of course, to be condemned, as the outward thrust upon the walls is very dangerously increased ; but the fact that roofs constructed of them have stood safely for a century and more evidences how great is the strength of palmyra and how lasting its high qualities are. For purposes for which additional strength beyond that obtained from single scantlings is desired, such as the bearers of bridge platforms, &c., two or more such scantlings are trenailed together, and if these be of sound timber and are closely joined they are as free from internal decay as any beam of other timber cut from the solid can be. There is, however, one disqualification to this timber which to some extent

militates against its employment for certain purposes, and that is that it cannot be employed with iron in connection with it. There seems to be a mutual reaction between this metal and the timber. Iron nails inserted in it rapidly waste away, while at the same time the fibre of the wood around them decays; so that a very few months suffices to loosen the attachment by such nails. Trenailing—or trennelling, to employ the usual term,—has therefore always to be resorted to, because of this mutually antagonistic action.

But on the other hand, no wood known to us so successfully resists the attack of white ants as does palmyra—always supposing that matured wood is used. It does not, as does jack, contain an acid which is repellent to the taste of these destructive insects, but it simply resists their attack by the hardness of its fibre and its structure generally. In a country therefore like Ceylon, in which timber of nearly every kind soon succumbs to the ravages of the white-ant, this timber must be exceptionally useful for constructive purposes. The same qualification would make it admirably adapted for use as railway sleepers, were it not for the repugnance it exhibits against contact with metal. For ages past the high qualities of this timber have been duly appreciated in Southern India, and there has existed a large export trade of it from the ports of the Jaffna peninsula to those of the Madras provinces. We have before suggested that the food products of this tree, the value of its leaves for thatching, and the many other useful purposes which it serves during its life,—purposes which have been the theme of Tamil poetical effusions,—might well direct the attention of our Forestry Department to its cultivation in many localities unsuited to ordinary forest growth. The high value of it as a timber producing tree should surely be a further and strong inducement to the Government to extend its cultivation. Altogether, as an economic question likely to affect the future of our timber supplies, our Forestry officers should, it seems to us, make every effort to propagate its growth, for it will flourish in soils and under conditions of climate which are inimical to the growth of any other tree known to us.

BENGAL SECRETARIAT LIBRARY

IV. EXTRACTS FROM OFFICIAL GAZETTES.

1.—GAZETTE OF INDIA—

No. 1171.—*The 6th December, 1888.—Mr. E. S. Carr*, Assistant Conservator of Forests, 1st grade, Punjab, whose services have been temporarily placed at the disposal of the Government of India by the Government of the Punjab in Notification No. 551, dated the 27th ultimo, is deputed to Upper Burma as a Deputy Conservator of the 3rd grade (temporary rank), with effect from the date on which he reports himself for duty to the Conservator of Forests, Upper Burma.

No. 1174.—In continuation of the Notification of this Department, No. 1121 F., dated the 9th November, 1888, it is hereby notified that *Mr. E. G. Chester*, Deputy Conservator of Forests, 3rd grade, Bengal, is appointed to be Forest Officer in the Andamans, *vice Mr. Fowler*, who will revert to his substantive appointment of Deputy Conservator of the 4th grade in Bengal from the date on which he availed himself of the privilege leave granted him in the Notification quoted above.

No. 1215.—*The 14th December, 1888.*—Consequent on the return from furlough of *Mr. W. R. J. Brereton*, Deputy Conservator of Forests, 1st grade, North-Western Provinces and Oudh, *Mr. W. G. Allan*, Officiating Deputy Conservator, 1st grade, North-Western Provinces and Oudh, will revert to his substantive appointment of Deputy Conservator, 2nd grade, with effect from the 11th December, 1888.

2.—MADRAS GAZETTE—

The 23rd November, 1888.—R. Venkatesa Mudaliar, Forest Ranger, 5th grade, on probation, Nellore District, is confirmed in his appointment with effect from the 13th November, 1888. He has yet to pass in levelling, for which a given time will hereafter be arranged.

3.—BOMBAY GAZETTE—

No. 8282.—*Mr. G. A. Hight*, Deputy Conservator of Forests, 2nd grade, and Divisional Forest Officer, Dhárwár, is allowed privilege leave of absence for one month.

4.—CALCUTTA GAZETTE—

No. 1121.—Privilege leave of absence for two months is granted

to *Mr. M. S. Fowler*, Deputy-Conservator of Forests, 3rd grade (temporary rank), Andamans, with effect from the date on which he availed himself of it.

The 2nd December, 1888.—The following postings of officers are ordered:—

Mr. E. G. Chester, Deputy Conservator of Forests, on return from the furlough granted in the notification, dated 16th September, 1887, is posted to the charge of the forests in the Andamans.

Mr. M. S. Fowler, Deputy Conservator of Forests (on leave), is, on its expiry, posted to the charge of the Working Plans Division.

5.—NORTH-WESTERN PROVINCES AND OUDH GAZETTE—

Nil.

6.—PUNJAB GAZETTE—

No. 558.—*The 5th December, 1888.*—*Mr. G. S. Hart*, Assistant Conservator of Forests, passed by the Higher Standard the Departmental Examination in Hindustáni held at Lahore on the 24th of October, 1888.

No. 568.—*The 13th December, 1888.*—*Mr. W. Shakespear*, Deputy Conservator of Forests, on return from the furlough granted in *Punjab Government Gazette* Notification No. 195, dated 9th April, 1888, landed at Bombay on the afternoon of the 20th November, 1888. *Mr. Shakespear* reported his arrival at Lahore on the forenoon of the 24th November, 1888, and was attached to the Lahore Forest Division.

No. 569.—*Mr. W. E. D'Arcy*, Deputy Conservator of Forests, and *Mr. W. Shakespear*, Deputy Conservator of Forests, respectively delivered over and assumed charge of the Lahore Forest Division on the forenoon of the 27th November, 1888.

7.—CENTRAL PROVINCES GAZETTE—

No. 6925.—*The 29th November, 1888.*—The Chief Commissioner is pleased, under Section 25 (*i*) of Act VII. of 1878 (The Indian Forest Act), to prescribe the following Rules to be in force in all "Reserved Forests" in the Central Provinces:—

I.—The poisoning of water for any purpose whatever is prohibited.

II.—(1). Hunting, shooting, fishing or setting of traps or snares is prohibited, except with the permission in writing of the Deputy Commissioner or a Forest Officer duly authorised by him or by the Conservator of Forests in this behalf, and specifying the particular forest or forests to which the permission applies and the period for which it is current.

(2). The permit may either be general or may restrict the holder to the hunting or shooting or trapping or snaring of particular species, or may prohibit the hunting or shooting or trapping or snaring of any particular species.

(3). The permit shall specifically prohibit the destruction or capture of animals of any species in respect of which the Chief Commissioner has directed the observance of a close season, during the term of such close season.

(4). The permit may impose restrictions upon the choice of camping grounds within the forests, and shall in all cases specify the number of companions, retainers, followers and animals which the holder of the permit may take with him into the forest.

(5). Any permit granted under this rule shall be liable at any time to be cancelled by order of the officer granting it, or of the Conservator of Forests, and shall cease to be valid in the event of fire occurring in the forest to which it applies.

(6). Forest officers of and above the rank of Sub-Assistant Conservator of Forests are exempted from the operations of this rule within the limits of their respective charges.

NOTE.—The Deputy Commissioner is a Forest Officer for the purpose of this rule.

III.—Any breach of the Forest Act or of any rules made under that Act by the holder of a permit granted under Rule II., or by his retainers, shall entail forifeiture of such permit.

IV.—Nothing in these rules shall exempt the holder of a permit granted under Rule II. from liability under the Forest Act ro any other law, for any thing done in contravention of such law or for any damage caused by him or his retainers.

V.—The fees to be charged for the present for permits issued under Rule II. shall be as follows:—

(1). A fee of one rupee per diem for each sportsman or shikari follower entering the reserve.

(2). A fee of eight annas per diem for each elephant or camel entering the reserve.

(3). When the permit authorises a camp to be formed within the limits of a reserve, the pay and allowances of a Forest subordinate to be deputed to attend the camp.

No. 7058.—Consequent on the return from privilege leave of *Mr. E. Dobbs*, Officiating Deputy Conservator of Forests, 4th grade, the following reversions are ordered with effect from the 24th October, 1888 :—

Mr. H. Moore, Officiating Deputy Conservator of Forests, 4th grade, to his substantive appointment of Assistant Conservator of Forests, 1st grade.

Mr. H. B. Anthony, Officiating Assistant Conservator of Forests, 1st grade, to his substantive appointment of Assistant Conservator of Forests, 2nd grade.

8.—BURMA GAZETTE—

No. 306.—*The 29th November, 1888.*—At an examination held at

Toungoo on the 1st October, 1888, *Mr. J. Niebet*, Deputy Conservator of Forests, passed the examination in Hindustani by the Lower Standard.

9.—ASSAM GAZETTE—

Nil.

10.—MYSORE GAZETTE—

The 14th November, 1888.—The public are hereby informed that owing to the institution of Kheddah operations in the Chamrajnagar Taluk, all shooting of any game whatsoever in the forests of that Taluk is strictly prohibited until further notice.

Persons entering the above forests in pursuit of game and for sporting purposes will be liable to be prosecuted.

11.—BERAR GAZETTE—

Nil.

III EXTRACTS FROM OFFICIAL GAZETTES.

1.—GAZETTE OF INDIA—

No. 1148.—*The 21st December, 1888.*—*Mr. E. G. Chester*, Deputy Conservator of Forests, Port Blair and the Nicobars, is appointed to be ex-officio an Assistant Superintendent in that Settlement, with effect from the date on which he may assume charge of his duties and until further orders.

No. 1239.—Consequent on the retirement from the service of *Mr. G. Greig*, Conservator of Forests, 1st grade, Central Circle, North-Western Provinces and Oudh, the following promotions are made, with effect from the 29th December, 1888, and until further orders :—

Captain E. S. Wood, Officiating Conservator, 1st grade, Oudh Circle, North-Western Provinces and Oudh—to be permanent Conservator, 1st grade.

Lieutenant-Colonel G. J. VanSomeren, M.G.L.I., sub. *pro tem.* Conservator, 2nd grade, Berar (on furlough)—to be permanent Conservator, 2nd grade.

Mr. G. Mann, Officiating Conservator, 2nd grade, Assam—to be *sub. pro* tem. Conservator, 2nd grade.

Mr. W. R. Fisher, sub. *pro tem.* Conservator, 3rd grade, School Circle, North-Western Provinces and Oudh, and Director of the Forest School at Dehra Dún—to be permanent Conservator, 3rd grade.

Mr. C. Bagshawe, Officiating Conservator, 3rd grade, Central Circle, North-Western Provinces and Oudh—to be sub. *pro tem* Conservator, 3rd grade.

Mr. E. E. Fernandez, sub. *pro tem.* Deputy Director of the Forest School—to be permanent Deputy Director.

No. 5.—Consequent on the return from privilege leave of *Mr. H. C. Hill*, Conservator of Forests, 2nd grade, Upper Burma, the following reversions will take effect from 5th December, 1888 :—

Mr. E. P. Popert, Officiating Conservator, 2nd grade, Pegu Circle, Burma,—to Conservator, 3rd grade.

Mr. J. W. Oliver, Officiating Conservator, 3rd grade, Upper Burma,—to Officiating Deputy Conservator, 1st grade, Burma.

Mr. R. H. M. Ellis, Officiating Deputy Conservator, 1st grade, Bengal,—to Deputy Conservator, 2nd grade.

No. 8.—Consequent on the return from privilege leave of *Major C. T. Bingham*, B.S.C., Deputy Conservator of Forests, 1st grade, Burma, *Mr. J. W. Oliver*, Officiating Deputy Conservator, 1st grade, Burma, will revert to his substantive appointment of Deputy Conservator, 2nd grade, with effect from the 13th December, 1888.

2.—MADRAS GAZETTE—

The period of leave on medical certificate, under Section 128 of the Civil Leave Code, granted to Sub-Assistant Conservator *Mr. J. G. F. Marshall*, and notified at pages 1448 and 1622 of Part II. of the *Fort St. George Gazette* of 2nd October and 6th November, 1888, is commuted into privilege leave under Section 138 of the Code.

No. 1.—*Mr. A. W. Peet*, Acting Conservator of Forests, 2nd grade, privilege leave for two months, under Section 74 of the Civil Leave Code, Sixth Edition.

No. 2.—*The 8th January, 1889.—Mr. A. W. Peet*, Deputy Conservator of Forests, 2nd grade and Acting Conservator of Forests, Northern Circle, to act as Conservator of Forests, Southern Circle, during the absence of *Lieutenant-Colonel Campbell Walker* on leave, or until further orders.

No. 3.—*Mr. J. W. Cherry*, Deputy Conservator of Forests, 1st grade, to act as Conservator of Forests, Southern Circle, during the absence of *Mr. A. W. Peet* on privilege leave.

3.—BOMBAY GAZETTE—

No. 8528.—*The 20th December, 1888.—Mr. Náráyan Ballál Oke*, Sub-Assistant Conservator of Forests, 1st grade, is allowed privilege leave of absence for one month, with effect from the 5th instant.

No. 8561.—*The 21st December, 1888.—Mr. R. P. Ryan*, Assistant Conservator of Forests, 3rd grade, is promoted to the 2nd grade from 31st October, 1888.

Mr. A. D. Wilkins, Divisional Forest Officer, North Thána, delivered over and *Mr. Joseph Baptista*, L.C E., Range Forest Officer, Bassein, received charge of the B Sub-Divisional office, North Thána, on the 10th December, 1888, before office hours.

No. 162.—*Mr. J. H. Clabby*, Acting Sub-Assistant Conservator of Forests, North Thána, passed an examination in Maráthi on the 7th instant.

Messrs. G. A. Hight and *H. Muray*, Deputy Conservators of Forests, respectively delivered over and received charge of the Dhárwár Forest Division on the 3rd January, 1889, before office hours.

4.—CALCUTTA GAZETTE—

Mr. C. G. Rogers, Assistant Conservator of Forests, passed the departmental examination held on the 7th and 8th November, 1888—

In Forest Law,	... ...	*With credit.*
In Land Revenue,	... ...	,,
In Hindustani,	... ...	Lower and Higher standards.

The 17th December, 1888.—Mr. W. M. Green, Deputy Conservator of Forests, 4th (officiating 3rd) grade, is promoted to the 3rd grade of Deputy Conservator, with effect from the 4th October, 1888.

Mr. M. S. Fowler, Deputy Conservator of Forests, 4th grade, is appointed to officiate in the 3rd grade of Deputy Conservators, with effect from the 4th October, 1888, till further orders.

The 20th December, 1888.—The following postings and transfers are ordered :—

Mr. C. A. G. Lillingston, Deputy Conservator of Forests, on return from extraordinary leave, to the charge of the Palamow Sub-division of the Chota Nagpore Forest Division.

Mr. E. E. Slane, Sub-Assistant Conservator of Forests, on relief by *Mr. Lillingston*, from the Palamow Sub division to the Singbhoom Sub-division of the Chota Nagpore Forest Division.

Babu Sreedhur Chuckerbutty, Sub-Assistant Conservator of Forests, on relief by *Mr. Slane*, from the Singbhoom sub-division to the Julpigori Sub-division of the Julpigori Forest Division, of which he will assume charge from *Babu Hem Chunder Sircar*, Forest Ranger.

The 7th January, 1889.—*Mr Henry Haselfoot Haines*, who has been appointed to the Indian Forest Department by Her Majesty's Secretary of State for India and posted to Bengal, having reported his arrival in India on the afternoon of the 31st December, 1888, is attached to the Working Plans Forest Division, Darjeeling, as an Assistant Conservator of Forests, 3rd grade.

5.—NORTH-WESTERN PROVINCES AND OUDH GAZETTE—

No. $\frac{69}{\text{II-627A-3}}$.—*The 8th January, 1889.*—*Mr. W. R. Fisher*, Conservator of Forests, School Circle, furlough to Europe for two years, with effect from the date on which he may avail himself of the same.

No. $\frac{75}{\text{II-86A-6-1}}$.—The notification No. II-86A-3-7, dated the 14th August, 1888, regarding reversions of *Mr. N. Hearle*, Officiating Deputy Conservator of Forests, 3rd grade, to his substantive appointment as Deputy Conservator of Forests, 4th grade, and *Mr. A. Campbell*, Officiating Deputy Conservator of Forests, 4th grade, to officiate as Assistant Conservator of Forests, 1st grade, is hereby cancelled.

No. $\frac{79}{\text{II-86A-6-5}}$.—The notification No. $\frac{3176}{\text{II-86A-3-6}}$, dated the 14th August, 1888, regarding the reversion of *Messrs. A. F. Broun* and *B. A. Rebsch*, Forest Officers, is hereby cancelled.

No. $\frac{83}{\text{II-86A-6-9}}$.—The notification No. $\frac{4616}{\text{II-86A-5-5}}$, dated the 19th November, 1888, regarding temporary promotion of *Mr. B. A. Rebsch*, is hereby cancelled.

No. $\frac{87}{\text{II-86A-6-13}}$.—The notification No. $\frac{4617}{\text{II-86-5A-6}}$, dated the 19th November, 1888, regarding reversion of *Mr. B. A. Rebsch*, is hereby cancelled.

No. $\frac{91}{\text{II-86A-6-17}}$.—With effect from the 29th June, 1888, the date on which *Mr. A. Smythies*, Officiating Deputy Conservator of Forests, 3rd grade, returned from privilege leave—

Mr. A. F. Broun, Officiating Deputy Conservator of Forests, 3rd grade, to officiate as Deputy Conservator of Forests, 4th grade.

Mr. B. A. Rebsch, Officiating Deputy Conservator of Forests, 4th grade, to officiate as Assistant Conservator of Forest, 1st grade.

No. $\frac{101}{\text{II-86A-6-27}}$.—With effect from the 16th August, 1888, the date on which *Mr. N. Hearle*, Deputy Conservator of Forests, 4th grade, proceeded on subsidiary leave preparatory to furlough—

Mr. E. F. Litchfield, Officiating Deputy Conservator of Forests 4th grade, to officiate as Deputy Conservator of Forests, 3rd grade.

Mr. J. E. Barrett, Officiating Assistant Conservator of Forests, 1st grade, to officiate as Deputy Conservator of Forests, 4th grade.

No. $\frac{105}{\text{II-86A-6-31}}$.—With effect from the 24th August, 1888, the date on which *Mr. S. E. Wilmot*, Deputy Conservator of Forests, returned from furlough—

Mr. S. E. Wilmot, Deputy Conservator of Forests, 4th grade, to officiate as Deputy Conservator of Forests, 3rd grade.

Mr. E. F. Litchfield, Officiating Deputy Conservator of Forests, 3rd grade, to officiate as Deputy Conservator of Forests, 4th grade.

Mr. J. E. Barrett, Officiating Deputy Conservator of Forests, 4th grade, to officiate as Assistant Conservator of Forests, 1st grade.

No. $\frac{109}{\text{II-86A-6-35}}$.—With effect from the 19th September, 1888, *Mr. E. P. Dansey*, (Deputy Conservator of Forests, 4th grade), Assistant Inspector-General of Forests and Superintendent of Working Plans, to officiate as Deputy Conservator of Forests, 3rd grade—

Mr. S. E. Wilmot, Officiating Deputy Conservator of Forests, 3rd grade, to revert to his substantive appointment as Deputy Conservator of Forests, 4th grade.

Mr. B. A. Rebsch, Officiating Deputy Conservator of Forests, 4th grade, to officiate as Assistant Conservator of Forests, 1st grade.

No. $\frac{95}{\text{II-86A-6-21}}$.—In notification No. $\frac{3301}{\text{II-86A-4-1}}$, dated the 22nd August, 1888, notifying temporary grade promotion of certain Forest officers, for "*Mr. A. G. Hobart-Hampden*" read "*Mr. A. Campbell.*"

No. $\frac{96}{\text{II-86A-6 22}}$.—In notification No. $\frac{3302}{\text{II-86A-4-2}}$, dated the 22nd August, 1888, notifying temporary grade promotion of certain Forest officers, for "*Mr. A. G. Hobart-Hampden*" read "*Mr. A. Campbell.*"

No. $\frac{97}{\text{II-86A-6-23}}$.—In notification No. $\frac{3303}{\text{II-86A-4-3}}$, dated the 22nd August, 1888, notifying temporary grade promotion of certain Forest officers, for "*Mr. A. Campbell,*" read "*Mr. B. A. Rebsch.*"

6.—PUNJAB GAZETTE—

No. 576.—*The 19th December, 1888.*—Consequent on the return from furlough of *Mr. W. Shakespear*, Deputy Conservator of Forests, 3rd grade, the following reversions to take place with effect from the 24th November, 1888:—

Mr. E. A. Down to Deputy Conservator, 4th grade.

Mr. A. L. McIntire to Assistant Conservator, 1st grade.

No. 4.—*Mr. F. O. Lemarchand* and *Mr. L. G. Smith*, Deputy Conservators of Forests, respectively made over and assumed charge of the Kulu Forest Division on the forenoon of the 10th December, 1888.

No. 7.—*Mr. W. E. D'Arcy*, Deputy Conservator of Forests, on relief by *Mr. Shakespear* of the charge of the Lahore Forest Division, assumed charge of the Working Plans Branch of the Office of the Conservator of Forests on the forenoon of the 27th November, 1888.

No. 13.—*The 5th January, 1889.—Mr. G. S. Hart*, Assistant Conservator of Forests, is granted two months' examination leave with effect from the afternoon of 6th December, 1888.

7.—ASSAM GAZETTE—

No. 352.—*The 19th December, 1888.—Mr. F. S. Barker*, Assistant Conservator of Forests, 1st grade, and Officiating Deputy Conservator, 4th grade, Assam, is confirmed in that grade, with effect from the date on which *Mr. W. M. Green*, Deputy Conservator of Forests, Bengal, was promoted to the 3rd grade of Deputy Conservators.

No. 353.—*Mr. T. J. Campbell*, Assistant Conservator of Forests, 2nd grade, and Officiating 1st grade, is confirmed in that grade, with effect from the same date.

No. 354.—*Mr. T. J. Campbell* is appointed to officiate in the 4th grade of Deputy Conservators of Forests, with effect from the 29th of October, 1888, the date on which *Mr. C. G. D. Fordyce*, Deputy Conservator, went on furlough, until the return of *Mr. Barker* from leave.

The following officers have passed the half-yearly examination in the subjects noted against their names :—

Mr. H. G. Young, Forest Law, Lower Standard.
„ *C. P. Fisher*, Bengali, „ „

8.—BURMA GAZETTE—

No. 163.—In exercise of the power conferred by Section 8, sub-section (1), of the Upper Burma Laws Act, 1886, the Chief Commissioner is pleased, with the previous sanction of the Governor-General in Council, to extend the Upper Burma Forest Regulation, 1887, to all the territories which may from time to time be declared by notification under Section 8, sub-section (3), of the said Act to constitute the Shan States.

No. 166—*Mr. J. W. Oliver*, Deputy Conservator of Forests, made over charge of the office of Conservator, Upper Burma Circle, to *Mr. H. C. Hill* on the 4th December, 1888, after noon.

No. 167.—The following transfers and postings of Forest Officers are ordered :—

Major C. T. Bingham, Deputy Conservator, on his return from privilege leave, to the charge of the Rangoon Division.

Mr. J. W. Oliver, Deputy Conservator, to the charge of the Tharrawaddy Division.

Mr. G. Q. Corbett, Assistant Conservator, from Rangoon to the Tharrawaddy Division.

Mr. H. Jackson, Assistant Conservator, from Tharrawaddy to Allanmyo.

Mr. H. A. Hoghton, Deputy Conservator, on his return from privilege leave, to the charge of the Working Plans Division.

No. 15.—*Mr. H. A. Hoghton*, Deputy Conservator of Forests, resumed charge of the Working Plans Division from *Mr. E. P. Popert*, Conservator of Forests, on the afternoon of the 5th December, 1888.

No. 16.—*Mr. H. Jackson*, Assistant Conservator of Forests, made over, and *Mr. J. W. Oliver*, Deputy Conservator of Forests, resumed, charge of the Tharrawaddy Division on the afternoon of the 6th instant.

No. 17.—With reference to Revenue Department Notification No. 102 (Forests), dated the 20th August 1888, *Mr. H. A. Hoghton*, Deputy Conservator of Forests, reported his arrival at Calcutta on the forenoon of the 1st September last, and his departure thence for Rangoon on the 1st December following.

No. 18.—*Major C. T. Bingham*, Deputy Conservator of Forests, 1st grade, reported his arrival at Calcutta on return from the three months' privilege leave granted him in Notification No. 106, dated the 30th August, 1888, on the 5th December, after noon.

No. 453.—Under the provisions of Section 12 of the Code of Criminal Procedure, 1882, the Chief Commissioner appoints *Mr. T. A. Hauxwell*, Deputy Conservator of Forests, to be a Magistrate of the 3rd class in the districts of Amherst and Moulmein Town.

No. 454.—Under the provisions of Section 3 of the Burma Forest Act, 1881, the Chief Commissioner specially empowers *Mr. T. A. Hauxwell*, Deputy Conservator of Forests, Kado Division, a Magistrate of the 3rd class, to try forest offences.

No. 168.—*Mr. E. S. Carr*, Deputy Conservator of Forests, 3rd grade, is appointed to the charge of the Direction Division, Upper Burma Circle, with effect from the date on which he may assume charge of his duties at Mandalay.

No. 169.—The following promotion is ordered, with effect from the 5th November, 1888 :—

Mr. H. Jackson, Assistant Conservator of Forests, 2nd grade, to be a Deputy Conservator of Forests, 4th grade.

No. 19.—*Mr. G. Q. Corbett*, Assistant Conservator of Forests, made over, and *Major C. T. Bingham*, Deputy Conservator of Forests, resumed, charge of the Rangoon Division on the afternoon of the 13th instant.

No. 2.—*Mr. A. Weston* and *Mr. T. A. Hauxwell*, Deputy Conservators of Forests, respectively made over and received charge of the Kado Division on the afternoon of the 10th December, 1888.

No. 1.—*Mr. Herbert Carter*, Assistant Conservator of Forests, reported his arrival at Rangoon on the 2nd January 1889, before noon.

No. 2.—*Mr. Francis Joseph Branthwaite*, Assistant Conservator of Forests, reported his arrival at Rangoon on the 2nd January, 1889, before noon.

No. 3.—*Mr. Ernest Adolphus O'Bryen*, Assistant Conservator of Forests, reported his arrival at Rangoon on the 2nd January, 1889, before noon.

No. 4.—*Mr. William Frederick Loftus Tottenham*, Assistant Conservator of Forests, reported his arrival at Rangoon on the 2nd January, 1889, before noon.

No. 5.—*Mr. Henry Nilas Thompson*, Assistant Conservator of Forests, reported his arrival at Rangoon on the 2nd January, 1889, before noon.

No. 6.—*The 3rd January, 1889.*—*Mr. W. F. L. Tottenham*, Assistant Conservator of Forests, is posted to the Tharrawaddy Forest Division.

No. 7.—*Mr. Herbert Carter*, Assistant Conservator of Forests, is posted to the Working Plans Division, Pegu Circle.

9.—BERAR GAZETTE—

The Resident is pleased to declare that *Mr. Mansukh Rai*, a Sub-Assistant Conservator of Forests in Berar, has passed by the Higher Standard the Examination in Marathi prescribed for Forest Officers in the Hyderabad Assigned Districts—Appendix III. to the Forest Department Code.

10.—MYSORE GAZETTE—

The 11th December, 1888.—Ranger *Lakshmana Rao's* promotion from Rs. 40 to 50, as notified in the "Mysore Gazette," Part II., dated 6th October, 1888, is cancelled.

Ranger *Venkata Rao* in the Mysore District is promoted Ranger on Rs. 50 + 15 vice *Lakshmana Rao.*

Applications are invited for two scholarships from candidates wishing to prosecute their studies in the Forest School at Dehra Dún. They must be Natives of Mysore, and must have received a liberal education. Graduates in Arts will be preferred. Each candidate must furnish a certificate of sound health, good vision and hearing, from the Civil Surgeon of the Station nearest to his place of residence. The successful candidates will be granted scholarships of Rs. 30 each per mensem for the period they are required to remain at Dehra Dún, the scholarships being held subject to the condition of their giving satisfaction in the prosecution of their studies. They must engage to serve the Mysore Government on passing out of the school for a period of at least five years, or to refund the scholarships they may have drawn. On obtaining their diplomas they will be appointed Probationers in the Mysore Forest Department on Rs. 100 a month.

Candidates will be required to undergo a preliminary examination in the marginally noted subjects, to be held in the office of the Inspector General of Forests at Bangalore, in the first week of June next, and the candidates selected will join at Dehra Dún on the 25th June, 1889.

English—Composition and Conversation.
Arithmetic. Algebra—up to and including quadratic equations.
Elementary Geometry. Mensuration—lengths, area and volume.

Applications should be addressed to the undersigned so as to reach him before 15th April next.

11.—CENTRAL PROVINCES GAZETTE—

Nil.

Y. Extracts from Official Gazettes.

1.—Gazette of India—

No. 43.—*The 18th January, 1889.*—The following appointments are made during the absence on furlough of *Mr. W. R. Fisher*, Conservator of Forests, 3rd grade, School Circle, North-Western Provinces and Oudh, and Director of the Forest School, Dehra Dún, or until further orders :—

Lieutenant-Colonel F. Bailey, R.E., Conservator, 2nd grade, Punjab—to be Conservator, 2nd grade, School Circle, North-Western Provinces and Oudh, and Director of the Forest School, Dehra Dún.

Mr. R. H. C. Whittall, Officiating Conservator, 3rd grade, Berar—to be Officiating Conservator, 3rd grade, Punjab.

Mr. E. P. Dansey, Officiating Deputy Conservator, 3rd grade, North-Western Provinces and Oudh, and Assistant Inspector-General of Forests and Superintendent of Working Plans—to be Officiating Conservator, 3rd grade, Berar.

No. 90.—*The 29th January, 1889.*—With reference to the Notification of this Department, No. 43 F., dated the 18th instant, it is hereby notified that *Mr. E. E. Fernandez*, Deputy Director of the Forest School, officiated as Director of the Forest School, and was also in charge of the Office of Conservator of Forests, School Circle, North-Western Provinces and Oudh, in addition to his own duties, from the 2nd to the 15th January, 1889, both dates inclusive.

No. 118—9-5 G.—*The 31st January, 1889.*—In Notification No. 6, dated 4th January, 1889, for "27th December, 1888," read "25th December, 1888."

No. 120.—*The 6th February, 1889.*—Consequent on the retirement from the service of *Mr. W. Jacob*, Deputy Conservator of Forests, 1st grade, Central Provinces, the following promotions are made, with effect from the 31st December, 1888, and until further orders :—

Mr. A. E. Wild, Officiating Deputy Conservator, 1st grade, Punjab, is confirmed in that grade.

Mr. R. H. M. Ellis, Deputy Conservator, 2nd grade, Bengal, is appointed to officiate in the 1st grade of Deputy Conservators.

No. 130.—*The 7th February, 1889.*—The following permanent promotions are made in the Forest Department, consequent on the retirement from the service of *Dr. W. Schlich*, Inspector-General of Forests to the Government of India (on deputation in England), with effect from the 1st January, 1889 :—

Mr. B. Ribbentrop, Conservator, 2nd grade, and sub. *pro tem.*

Inspector-General of Forests, is confirmed in the latter appointment.

Mr. G. Mann, sub. *pro tem.* Conservator, 2nd grade, Assam, is confirmed in that grade.

Mr. C. Bagshawe, Deputy Conservator, 2nd grade, and sub. *pro tem.* Conservator, 3rd grade, Central Circle, North-Western Provinces and Oudh, is confirmed in the latter appointment.

In notifying *Dr. W. Schlich's* retirement from the Forest Department, the Governor-General in Council desires to place on record an acknowledgment of *Dr. Schlich's* valuable and distinguished services both in organising the Forest Administration in Sind and Bengal, and in developing the Imperial Department as Inspector-General of Forests.

Dr. Schlich's labours to perfect the technical education of the Forest Staff deserve special notice. To him is to a great extent due the credit of having established on a satisfactory and practical basis the School at Dehra for the instruction of the Executive Forest Staff, and to a still greater extent that of having organised the Forest Branch of the College at Cooper's Hill for the education of the Controlling Staff. It is a satisfaction to the Government of India to know that *Dr. Schlich's* retirement does not sever all connection between him and this country, and that, as Principal Professor of Forestry in Cooper's Hill College, he will still continue to exercise a useful influence over the Forest Departments of India.

No. 153.—*The 22nd February, 1889.—Mr. W. E. D'Arcy*, Officiating Deputy Conservator of Forests, 3rd grade, Punjab, is appointed to be Assistant Inspector-General of Forests and Superintendent of Working-Plans, with effect from 20th February, 1889, and until further orders.

2.—MADRAS GAZETTE—

The 2nd February, 1889.—Mr. A. Srinivasa Chamberlain, Ranger 5th grade, South Arcot District, has passed the Survey Test (Lower Standard) including Levelling.

M. R. Ry. A. V. Chidambara Iyer, Ranger, 5th grade, South Arcot District, has passed the Survey Test in Levelling.

No. 33.—*The 6th February, 1889.—Mr. J. W. Cherry*, Acting Conservator of Forests, Southern Circle, furlough for one year from or after 7th March, 1889, under section 50 of the Civil Leave Code, 6th edition.

No. 38.—*The 7th February, 1889.*—It is hereby notified that, under section 64 of the Madras Forest Act, 1882, the Governor in Council has cancelled the rules framed under clause (*c*) of section 63 of the said Act, which were published at page 590 of Part I. of the *Fort St. George Gazette*, dated 23rd September, 1884.

No. 39.—*The 8th February, 1889.—Mr. Charles D'Arcy McArthy*, Trained Forest Officer, appointed by the Secretary of State, having reported his arrival in Bombay on the afternoon of the 29th December, 1888, is brought on the strength of the Madras Forest Establishment as Assistant Conservator, 3rd grade, from that date, and is posted to the Cuddapah District.

M. R. Ry. M. L. Naraina Sastry, Forest Ranger, 5th grade, (on probation), from South Coimbatore to South Arcot.

Mr. G. R. Middleton, Forest Ranger, 4th grade, from South Arcot to North Coimbatore.

Mr. J. S. Grogan, Forest Ranger, 5th grade, from North Coimbatore to Tinnevelly.

Mr. A. M. Clay, Acting Ranger, 5th grade, from South Coimbatore to North Arcot.

The 16th February, 1889.—The following officers have passed the Departmental Test prescribed in paragraph 56 of the Forest Code:—

Mr. J. G. H. Marshall, Sub-Assistant Conservator, 2nd grade, (on probation), South Coimbatore, in (*a*) and (*b*).

A. R. Rama Rao, Forester, 1st grade, North Coimbatore, in (*a*), (*b*), (*c*), and (*d*) with credit.

Mr. R. W. Rouse, Forester, 1st grade, Tanjore, in (*a*), (*b*), (*c*) and (*d*) with credit.

M. Subrayalu Naidu, Forester, 1st grade, South Arcot, in (*a*), (*b*), (*c*) and (*d*).

C. Dhansing, Forester, 1st grade, Trichinopoly, in (*a*), (*b*), (*c*) and (*d*).

P. Alagiriswamy Naidu, Forester, 3rd grade, Trichinopoly, in (*a*), (*b*), (*c*), and (*d*).

T. S. David Pillai, Forester, 3rd grade, Trichinopoly, in (*a*), (*b*), (*c*) and (*d*).

3.—Bombay Gazette—

The 8th February, 1889.—Mr. G. A. Hight, Deputy Conservator of Forests, resumed charge of the Divisional Forest Office, Dhárwár, on the 2nd February, 1889, after office hours.

No. 1133.—*The 11th February, 1889.*—The privilege leave for one month granted under Government Notification No. 8528, dated 20th December, 1888, to *Mr. Narayan Ballal Oke*, Sub-Assistant Conservator of Forests, 1st grade, is commuted retrospectively into leave on medical certificate for one month and two days.

No. 929.—It is hereby notified that the next Departmental Examination of Forest officers will commence at the Town Hall, Bombay, on Monday the 8th April, 1889, at 11 A.M. (Bombay time). Forest officers who desire to be examined should send the necessary intimation to the Secretary to the Central Committee for Departmental Examinations before the 15th proximo.

4.—Calcutta Gazette—

The 11th January, 1889.—Mr. C. G. Rogers, Assistant Conservator of Forests, 3rd grade, is promoted to the 2nd grade, and is appointed to officiate in the 1st grade of Assistant Conservators, with effect from 7th November, 1888.

The 21st January, 1889.—With reference to the notifications of the 2nd and 17th December, 1888, *Mr. E. G. Chester*, Deputy Conservator of Forests, assumed charge of his duties in the Andamans on the forenoon of the 22nd November, 1888, from which date *Mr. M. S. Fowler* reverted to his substantive appointment of Deputy Conservator of Forests, 4th grade.

5.—NORTH-WESTERN PROVINCES AND OUDH GAZETTE—

The following Forest officers have passed in—

Forest Law, by the Higher Standard.

Babu Raghunáth Páthak, Sub-Assistant Conservator of Forests, Gorakhpur Division, Gorakhpur.

Babu Raghubar Dayál Bájpai, Head Clerk, office of Conservator of Forests, Oudh Circle, Lucknow.

Land Revenue Systems, by the Higher Standard.

Mr. J. M. Blanchfield, Sub-Assistant Conservator of Forests, Kumaun Division, Naini Tal.

Babu Raghunáth Páthak, Sub-Assistant Conservator of Forests, Gorakhpur Division, Gorakhpur.

Babu Raghubar Dayál Bájpai, Head Clerk, office of Conservator of Forests, Oudh Circle, Lucknow.

Vernacular, by the Higher Standard.

Babu Raghunáth Páthak, Sub-Assistant Conservator of Forests, Gorakhpur Division, Gorakhpur.

Babu Raghubar Dayál Bájpai, Head Clerk, office of Conservator of Forests, Oudh Circle, Lucknow.

Vernacular, by the Lower Standard.

Mr. M. Hill, Assistant Conservator of Forests, Kheri Division, Lakhimpur.

Mr. L. Mercer, Assistant Conservator of Forests, Saháranpur Division, Dehra Dún.

No. $\frac{44F}{200\text{-}65}$.—*The 16th January, 1889.*—In modification of Notification No. $\frac{689F}{200\text{-}20}$, dated 13th November, 1885, appointing, under clause (*c*), section 4, Chapter II. of the Forest Act VII. of 1878, *Pandit Ganga Dat Upreti*, Deputy Collector of Bijnor, as Forest Settlement Officer, for the settlement of rights in the proposed new reserves of the late Kumaun Iron Works Company's grant; *Mr. J. Oakeshott*, Assistant Commissioner, Naini Tal, is appointed Forest Settlement Officer for the same purpose, vice *Pandit Ganga Dat Upreti.*

No. $\frac{271}{\text{II-851-22}}$.—*The 30th January, 1889.—Mr. B. B. Osmaston*, who has been appointed to the Forest Department by the Right Hon'ble the Secretary of State for India, and who reported his arrival at Allahabad on the 2nd January, 1889, to be an Assistant Conservator of Forests, 3rd grade, and to be posted to the School Circle.

No. $\frac{310}{\text{II-649A-2}}$.—*Mr. J. M. Braidwood*, Deputy Conservator of Forests, in charge of the Naini Tal Division of the Central Circle, furlough to Europe for one year, with effect from the 15th March, 1889, or subsequent date.

No. $\frac{314}{\text{II-649A-6}}$.—*The 1st February, 1889.—Mr. F. B. Bryant*, Officiating Deputy Conservator of Forests, on special duty, to hold charge of the Naini Tal Division of the Central Circle, during the

absence on furlough of *Mr. J. M. Braidwood*, or until further orders.

6.—PUNJAB GAZETTE—

No. 27.—*The 11th January, 1889.*—*Mr. L. G. Smith*, Deputy Conservator of Forests, reported his return from the leave granted to him by *Punjab Government Gazette* Notification No. 396, dated 14th August, 1888, on the forenoon of the 29th of November, 1888.

No. 30.—Consequent on the return from privilege leave of *Mr. L. G. Smith*, Deputy Conservator of Forests, 4th grade, the following reversion to take place with effect from the 29th November, 1888 :—

Mr. J. L. Pigot to Assistant Conservator, 1st grade.

No. 46.—*The 19th January, 1889.*—*Lieutenant-Colonel F. Bailey* delivered over charge of the office of Conservator of Forests, Punjab, on the afternoon of the 4th of January, 1889.

No. 47.—*Mr. R. H. C. Whittall* assumed charge of the office of Conservator of Forests, Punjab, on the forenoon of the 8th of January, 1889.

No. 48.—*Mr. J. L. Pigot*, Assistant Conservator of Forests, held charge of the current duties of the office of the Conservator of Forests, Punjab, from the afternoon of the 4th to the forenoon of the 8th of January, 1889.

No. 85.—*The 13th February, 1889.*—*Mr. G. H. Hart*, Assistant Conservator of Forests, reported his return from the examination leave granted in *Punjab Government Gazette* Notification No. 13, dated 5th January, 1889, on the forenoon of the 7th February, 1889, and was attached to the Direction Division from that date.

No. 89.—*The 14th February, 1889.*—With reference to *Punjab Gazette* Notification No. 7, dated 4th January, 1889, it is hereby notified that *Mr. W. E. D'Arcy*, Deputy Conservator of Forests, and *Mr. J. L. Pigot*, Assistant Conservator of Forests, respectively delivered over and assumed charge of the Working Plans Branch of the office of the Conservator of Forests on the forenoon of the 11th February, 1889.

No. 90.—With reference to *Punjab Gazette* Notification No. 89, dated 14th February, 1889, the services of *Mr. W. E. D'Arcy*, Deputy Conservator of Forests, are placed at the disposal of the Government of India in the Revenue and Agricultural Department with effect from the forenoon of the 11th February, 1889.

No. 97.—*The 20th February, 1889.*—*Mr. G. S. Hart*, Assistant Conservator of Forests, 2nd grade, passed in Land Revenue, and in Forest Law with credit, in the Departmental Examination held at Lahore on the 8th February, 1889.

7.—ASSAM GAZETTE—

No. 16.—*The 21st January, 1889.*—Leave of absence for ten days, under Section 50 of the Civil Leave Code, is granted to *Mr. F. S. Barker*, Officiating Deputy Conservator of Forests, Assam, in

continuation of the furlough granted to him by Notification No. 326, dated the 22nd November, 1888.

No. 24.—*The 31st January, 1889.—Mr. F. S. Barker*, Officiating Deputy Conservator of Forests, returned from the leave granted to him in Notification No. 326, dated the 22nd November, 1888, and joined his appointment at Sibságar on the forenoon of the 18th instant.

8.—CENTRAL PROVINCES GAZETTE—

No. 400.—*The 21st January, 1889.—Mr. A. W. Blunt*, who has been appointed by the Secretary of State to be an Assistant Conservator of Forests, 3rd grade, and has been posted to the Central Provinces, reported his arrival at Nagpur on the forenoon of the 3rd instant.

No. 483.—*The 24th January, 1889.*—Furlough for nine months, under Section 50 of the Civil Leave Code, is granted to *Captain C. W. Losack*, Deputy Conservator of Forests, with effect from the 15th February, 1889, or the subsequent date on which he may avail himself of it.

9.—BURMA GAZETTE—

No. 8.—*The 9th January, 1889.*—The following promotion is ordered with effect from the 6th November, 1888:—

Mr. C. L. Toussaint, Assistant Conservator of Forests, 3rd grade, to be Assistant Conservator, 2nd grade.

No. 11.—*The 14th January, 1889.*—In exercise of the power conferred by section 2 of the Burma Boundaries Act, 1880, the Chief Commissioner appoints *Mr. E. C. S. George*, Assistant Commissioner, to be a Boundary Officer in respect of the lands specified in this Department Notification No. 1 (Upper Burma), dated the 5th January, 1887.

No. 12.—*The 17th January, 1889.—Mr. H. N. Thompson*, Assistant Conservator of Forests, is posted to Mandalay.

No. 13.—*Mr. E. A. O'Bryen*, Assistant Conservator of Forests, is posted to Mandalay.

No. 14.—*Mr. F. J. Branthwaite*, Assistant Conservator of Forests, is posted to Mandalay.

No. 15.—*Mr. E. A. O'Bryen*, Assistant Conservator of Forests, is transferred from Mandalay to the Minbu Division.

No. 16.—*Mr. F. J. Branthwaite*, Assistant Conservator of Forests, is transferred from Mandalay to the Bhamo Division.

No. 17.—*Mr. H. N. Thompson*, Assistant Conservator of Forests, in transferred from Mandalay to the Pyinmana Division.

No. 18.—The following alterations in rank in the Forest Department are ordered, with effect from the 13th December, 1888:—

Mr. A. F. Broun, Deputy Conservator of Forests, 3rd (officiating 2nd) grade, to revert to his substantive rank.

Mr. J. Copeland, Deputy Conservator of Forests, 4th (officiating 3rd) grade, to revert to his substantive rank.

No. 19.—With reference to this department Notification No. 76, dated the 4th July, 1888, the Chief Commissioner appoints *Mr.*

C. E. Daniell, Sub-Divisional Officer, Pyuntaza, Shwegying district, to succeed *Lieutenant-Colonel G. Alexander*, as Forest Settlement Officer to enquire into and determine the existence, nature and extent of any rights claimed by, or alleged to exist in favour of, any person in or over any land comprised within the limits specified in this Department Notifications Nos. 34 and 35, dated the 10th June, 1885, and any claims relating to the practice within the said limits of taungya cultivation, and to deal with the same as provided in Chapter II. of the Burma Forest Act, 1881.

No. 1.—*The 21st January, 1889.—Mr. W. F. L. Tottenham*, Assistant Conservator of Forests, reported his arrival in Tharrawaddy on the afternoon of the 7th instant.

No. 2.—*Mr. H. Carter*, Assistant Conservator of Forests, reported himself for duty with the Working Plans Division on the forenoon of the 12th instant.

10.—BERAR GAZETTE—

Nil.

11.—MYSORE GAZETTE—

Nil.

IV. Extracts from Official Gazettes.

1.—Gazette of India—

No. 187.—*The 28th February, 1889.*—*Mr. W. H. Reynolds*, Deputy Conservator of Forests, 2nd grade, Punjab, and Superintendent of Forest Surveys, is appointed to officiate in the 1st grade of Deputy Conservators during the absence on furlough of *Captain C. W. Losack*, Deputy Conservator, 1st grade, Central Provinces, or until further orders.

No. 250.—*The 15th March, 1889.*—The undermentioned officers, who have been appointed by Her Majesty's Secretary of State to the Forest Department of India, are appointed to be Assistant Conservators of the 3rd grade, with effect from the dates specified opposite their names, and are posted to the Provinces noted below:—

Mr. B. B. Osmaston,—North-Western Provinces and Oudh,—29th December, 1888.

Mr. H. H. Haines,—Bengal, 1st January, 1889.

Mr. A. V. Monro,—Punjab,—30th December, 1888.

Mr. A. W. Blunt,—Central Provinces,—30th December, 1888.

Mr. H. Carter,
Mr. F. J. Branthwaite,
Mr. E. A. O'Bryen,
Mr. W. F. L. Tottenham,
Mr. H. N. Thompson,
} Burma,—2nd January, 1889.

No. 259.—*Mr. F. S. Barker*, Officiating Deputy Conservator of Forests, 4th grade, Assam, is transferred temporarily to the Central Provinces.

No. 262.—Consequent on the departure on furlough of *Colonel W. J. Seaton, M.S.C.*, Conservator of Forests, 1st grade, Tenasserim Circle, Burma, the following temporary promotions are made, with effect from the 14th February, 1889, and until further orders:—

Lieutenant-Colonel F. Bailey, R.E., Conservator, 2nd grade, School Circle, North-Western Provinces and Oudh, and Director of the Forest School—to officiate in the 1st grade of Conservators.

Mr. E. P. Popert, Conservator, 3rd grade, Pegu Circle, Burma—to officiate in the 2nd grade of Conservators.

Mr. J. W. Oliver, Deputy Conservator, 2nd grade, Burma—to officiate in the 3rd grade of Conservators and to have charge of the Tenasserim Forest Circle.

The 22nd March, 1889.—Lieutenant-Colonel J. E. Campbell, B.S.C., Deputy Conservator of Forests, 3rd grade, North-Western Provinces and Oudh, leave (p. a.) for one year and 243 days, under rule IX. of the Regulations of 1868.

2.—MADRAS GAZETTE—

The 12th February, 1889.—Mr. E. E. Leipenstein, Forest Ranger, on probation, in the Kurnool District, is declared to have passed the Departmental Test prescribed in paragraph 52 of the Madras Forest Department Code, with effect from 21st January, 1889.

Privilege leave has been granted to *K. Narayanaswami Iyer*, Forest Ranger, Acting 4th grade, Trichinopoly, from 31st January to 9th February, 1889 inclusive, under Section 138 of the Civil Leave Code.

The 2nd March, 1889.—Mr. W. H. Blacker and *V. N. Krishnasawmy Aiyar*, Foresters, 2nd grade, North Arcot and Madura Districts respectively, have passed the Departmental Test prescribed in paragraph 56 of the Forest Code.

Privilege leave has been granted to *Mr. R. S. Bower*, Forest Ranger, 4th grade, North Arcot, for one month, under Section 138 of the Civil Leave Code, with effect from 16th February, 1889.

The 5th March, 1889.—The following promotions and reversions are made with effect from 7th January, 1889:—

Mr. J. S. Gamble, Conservator, 2nd grade, to be Acting Conservator, 1st grade.

Mr. A. W. Peet, Acting Conservator, 1st grade, reverted to Conservator, 2nd grade.

Mr. J. W. Cherry, Acting Conservator, 2nd grade, reverted to Deputy Conservator, 1st grade.

Mr. E. D. M. Hooper, Acting Deputy Conservator, 1st grade, reverted to Deputy Conservator, 2nd grade.

Mr. R. W. Morgan, Acting Deputy Conservator, 2nd grade, reverted to Deputy Conservator, 3rd grade.

Mr. A. W. Lushington, Acting Deputy Conservator, 3rd grade, reverted to Deputy Conservator, 4th grade.

Mr. G. Homfray, Acting Deputy Conservator, 4th grade, reverted to Assistant Conservator, 1st grade.

The 16th March, 1889.—Mr. J. G. F. Marshall, Sub-Assistant Conservator, 2nd grade (on probation), from South Coimbatore Division to the Tinnevelly District.

Mr. S. C. Moss, Sub-Assistant Conservator, 2nd grade, acting sub. *pro tem.*, from the Tinnevelly District to the South Coimbatore Division.

Mr. R. W. Rouse, Forester, 1st grade, Tanjore District, to act as Ranger, 5th grade (sub. *pro tem.*), from date of termination of Ranger *Mr. Blomfield's* probation, and posted to North Malabar Division.

M. Subrayulu Naidu, Forester, 1st grade, South Arcot District, to act as Ranger, 5th grade (sub. *pro tem.*), from 1st April next.

3.—BOMBAY GAZETTE—

No. 1862.—*The 8th March, 1889.*—*Colonel J. G. McRae*, Conservator of Forests, Sind Circle, is allowed privilege leave of absence for three months from the 15th May, 1889, or from such subsequent date as he may avail himself of it.

No. 1908.—*The 11th March, 1889.*—*Mr. Joseph Baptista*, L.C.E., Ranger, 1st grade, in charge of the Bassein Range of the North Thána Division, was, in addition to his own duties, in charge of the B. Sub-Divisional Forest Office of North Thána from 10th December, 1888 to 22nd December, 1888, both days inclusive.

The 15th March, 1889.—*Mr. Haripad Mitra*, Sub-Assistant Conservator of Forests, Working Plans Branch No. II, Kánara, and *Mr. E. G. Oliver*, Divisional Forest Officer, Working Plans Branch No. II, Kánara, respectively delivered over and received charge of the office of the Sub-Assistant Conservator of Forests on the 9th March, 1889, after office hours.

No. 2095.—*18th March, 1889.*—The services of *Mr. S. Hornidge*, Acting Deputy Conservator of Forests, 4th grade, Bombay Presidency, are placed temporarily at the disposal of the Government of India in the Revenue and Agriculture Department (Forests), for employment in the Central Provinces.

No. 2097.—*Mr. G. K. Betham*, Deputy Conservator of Forests, 3rd grade, and Divisional Forest Officer, Bijápur, is allowed privilege leave of absence for three months from the 1st April, 1889, or from such subsequent date as he may avail himself of it.

4.—CALCUTTA GAZETTE—

Nil.

5.—NORTH-WESTERN PROVINCES AND OUDH GAZETTE—

No. $\frac{641}{\text{II-851-33}}$.—*The 27th February, 1889.*—With effect from the 27th October, 1888, *Mr. Montague Hill*, Assistant Conservator of Forests, 3rd grade, North-Western Provinces and Oudh, to be Assistant Conservator of Forests, 2nd grade.

No. $\frac{759}{\text{II-86-7A-1}}$.—*The 2nd March, 1889.*—With effect from the 11th December, 1888, the date on which *Mr. W. G. Allan*, Officiating Deputy Conservator of Forests, 1st grade, reverted to his substantive appointment as Deputy Conservator, 2nd grade—

Mr. E McA. Moir, Officiating Deputy Conservator of Forests, 2nd grade, to revert to his substantive appointment as Deputy Conservator, 3rd grade;

Mr. A. Smythies, Officiating Deputy Conservator of Forests, 3rd grade, to revert to his substantive appointment as Deputy Conservator, 4th grade;

Mr. A. Campbell, Officiating Deputy Conservator of Forests, 4th grade, to officiate as Assistant Conservator, 1st grade.

No. $\frac{762}{\text{II-86-7A-4}}$.—With effect from the 1st January, 1889, the date on which *Mr. C. Bayshawe*, Deputy Conservator of Forests, 2nd grade, was confirmed as Conservator of Forests, 3rd grade—

Lieutenant-Colonel J. E. Campbell, Deputy Conservator of Forests, 3rd grade, officiating as Deputy Conservator of Forests, 2nd grade, to be confirmed in the latter grade;

Mr. E. P. Dansey, Deputy Conservator of Forests, 4th grade, officiating as Deputy Conservator of Forests, 3rd grade, to be confirmed in the latter grade;

Mr. E. F. Litchfield, Assistant Conservator of Forests, 1st grade, officiating as Deputy Conservator of Forests, 4th grade, to be confirmed in the latter appointment;

Mr. A. G. Hobart-Hampden, Assistant Conservator of Forests, 2nd grade (on furlough), to be an Assistant Conservator of Forests, 1st grade.

No. $\frac{765}{\text{II-86-7A-7}}$.—With effect from the date on which *Mr. E. P. Dansey*, Deputy Conservator of Forests, 3rd grade, took charge of the office of Conservator of Forests, 3rd grade, Berar—

Mr. A. Smythies, Deputy Conservator of Forests, 4th grade, to officiate as Deputy Conservator of Forests, 3rd grade;

Mr. A. Campbell, Officiating Assistant Conservator of Forests, 1st grade, to officiate as Deputy Conservator of Forests, 4th grade.

No. $\frac{805}{\text{II-851-39}}$.—*The 7th March, 1889.*—With effect from the 25th October, 1888, *Mr. L. Mercer*, Assistant Conservator of Forests, 3rd grade, North-Western Provinces and Oudh, to be Assistant Conservator of Forests, 2nd grade.

6.—PUNJAB GAZETTE—

No. 120.—*The 5th March, 1889.*—With reference to *Punjab Gazette* Notification No. 551, dated 27th November, 1888, the Hon'ble the Lieutenant-Governor is pleased to make the following promotion, to take place with effect from the forenoon of the 1st of December, 1888, and until further orders :—

Mr. R. J. Pinder, Officiating Assistant Conservator of Forests, 1st grade, to be Assistant Conservator, 1st grade, sub *pro tem.*, *vice Mr. E. S. Carr.*

No. 128.—*The 11th March, 1889.*—In accordance with the provisions of Section 31 of Act VII. of 1878, the Hon'ble the Lieutenant-Governor, with the previous sanction of the Governor-General in Council, is pleased to make the following rules for the regulation of cultivation in the Protected Forests of the Murree and Kahúta Tahsils of the Ráwalpindi District :—

Payment for trees standing on the land.

I.—In authorizing cultivation under Rule 17 the Deputy Conservator shall, as he may see fit, either make over without payment to the person to whom authority is granted all trees upon the land to which such authorization refers, or offer the same to him before the order authorizing cultivation is passed

at a valuation to be fixed by the Deputy Conservator of Forests. An appeal shall lie from an order of the Deputy Conservator fixing the valuation under this rule to the Deputy Commissioner, whose order shall be final. Payment of the price fixed under this rule for such trees shall be made by the person authorized to cultivate either in a lump previous to entry on the land, or by instalments, as may be determined by the Deputy Conservator. In default of payment of any such lump sum or instalment, the Deputy Conservator may, according to the circumstances, either reject the application for permission to cultivate or cancel such permission if already granted.

Rent payable in respect of such land.

II.—Land of which the cultivation has been authorized under Rule 17 shall be liable to the payment of a rent charge of 25 per cent. over and above the full land revenue assessment which may be imposed upon it.

7.—Assam Gazette—

No. 51.—*The 21st February, 1889.—Mr. T. J. Campbell*, Officiating Deputy Conservator, 4th grade, reverted to the appointment of Officiating Assistant Conservator of Forests, 1st grade, with effect from the forenoon of the 18th January, 1889, the date on which *Mr. F. S. Barker* returned from leave.

No. 64.—*The 27th February, 1889.—Mr. H. G. Young*, Assistant Conservator of Forests, 2nd grade, is appointed to officiate as Assistant Conservator of Forests, 1st grade, *vice Mr. D. P. Copeland*, with effect from the 5th November, 1888.

No. 9.—*The 14th March, 1889.*—In exercise of the powers conferred by Section 29 (*d*) of Act VII. of 1878 (the Indian Forest Act), the Chief Commissioner of Assam is pleased to cancel the concluding portion of Notification No. 17, dated the 13th April, 1883, by which the following trees were declared reserved :—

24. All trees on the leaves of which silk-worms are fed.
25. All trees on which the lac insect is reared.
26. All trees yielding India-rubber or caoutchouc.

The Chief Commissioner is also pleased, in exercise of the powers conferred by Section 29 (*a*) of Act VII. of 1878 (the Indian Forest Act), to declare the Indian-rubber tree (*Ficus elastica*) to be a reserved tree under that Act from this date.

8.—Central Provinces Gazette—

No. 1134.—The Chief Commissioner is pleased to invest the undermentioned Forest Officers with the powers defined in Section 71, Act VII. of 1878 (the Indian Forest Act), to be exercised within the limits of their respective Divisions :—

Colonel H. C. T. Jarrett, v.c., Deputy Conservator of Forests.
Mr. R. H. E. Thompson, Deputy Conservator of Forests.
Captain C. W. Losack, Deputy Conservator of Forests.
Mr. J. McKee, Deputy Conservator of Forests.
Mr. W. P. Thomas, Deputy Conservator of Forests.
Mr. G. H. Foster, Deputy Conservator of Forests.

Mr. E. Dobbs, Deputy Conservator of Forests, (sub. *pro tem*).
Mr. W. King, Officiating Deputy Conservator of Forests.
Mr. H. Moore, Assistant Conservator of Forests.
Mr. H. B. Anthony, Assistant Conservator of Forests.
Mr. A. E. Lowrie, Assistant Conservator of Forests.
Mr. A. A. Watson, Assistant Conservator of Forests.
Mr. A. F. Gradon, Assistant Conservator of Forests.
Mr. M. Mutannah, Officiating Assistant Conservator of Forests.
Mr. Chander Kumar Chatterji, Sub-Assistant Conservator of Forests.
Mr. Mahomed Ghouse, Sub-Assistant Conservator of Forests.

No. 1505.—The Chief Commissioner is pleased, under Section 25 (*i*) of Act VII. of 1878 (the Indian Forests Act), to add the following Rules to those published in Notification No. 6925, dated the 29th November, 1888:—

VI.—Permits for shooting only may be granted at the periodic rates specified below, instead of at the daily rates payable under Rule V:—

Period.	*Periodic rates.*								
	For each Sportsman or Shikari follower.			For each Elephant taken into the Reserved Forest.			For each Camel taken into the Reserved Forest.		
	Rs.	A.	P.	Rs.	A.	P.	Rs.	A.	P.
From the 1st July, in any one year to the 31st October, in the same year, ...	5	0	0	5	0	0	5	0	0
From the 1st November, in any one year to the end of February, in the succeeding year, ...	25	0	0	5	0	0	5	0	0
From the 1st March, in any one year to the 30th June, in the same year, ...	50	0	0	5	0	0	5	0	0
For one month within the period from the 1st July, to the 31st October, as above,	2	8	0	2	0	0	2	0	0
For one month within the period from the 1st November, to the end of February, as above, ...	7	8	0	2	0	0	2	0	0
For one month within the period from the 1st March, to the 30th June, as above,	15	0	0	2	0	0	2	0	0

N.B.—(*a*). A charge for the pay and allowances of a Forest Subordinate, as provided by Rule V. (3), will also be made when camping in the Reserves is allowed.

(*b*). The charge provided by Rules V. and VI. for elephants and camels will only be made in the event of camping within the Reserved Forests being allowed.

VII.—For specific purposes and in special cases permits may, with the previous sanction of the Conservator, be granted without charge.

VIII.—Nothing in the preceding rules shall debar the disposal by auction-sale, contract, or otherwise, of the fishing or shooting within any Reserved Forests or portion of a Reserved Forest.

EXPLANATIONS.

(*a*). Shikari follower in these rules means a person who is taken into the reserves for the purpose of killing or catching game, and is not merely an attendant on the holder of the permit. The intention is that each "effective gun" of the party should pay the fee. Persons employed by the holder of a permit in tracking down, or beating for game (where this is allowed) are not Shikari followers within the meaning of Rules V. and VI.

(*b*). The holder of a permit is allowed to remove from the forest any game shot by him.

(*c*). Shooting will not ordinarily be allowed within "fire-protected forests" during the hot season.

No. 1581.—*The 12th March, 1889.—Captain C. W. Losack*, Deputy Conservator of Forests, availed himself, on the afternoon of the 1st instant, of the nine months' furlough granted him by Notification No. 483, dated the 24th January last.

9.—BURMA GAZETTE—

No. 3.—*The 15th February, 1889.—Mr. J. W. Oliver*, Deputy Conservator of Forests, made over, and *Mr. G. Q. Corbett*, Assistant Conservator of Forests, received, charge of the Tharrawaddy Division on the afternoon of the 8th instant.

No. 3.—*The 12th February, 1889.—Mr. T. A. Hauxwell*, Deputy Conservator of Forests, made over, and *Mr. A. Weston*, Deputy Conservator of Forests, received, charge of the Kado sub-division on the afternoon of the 31st January, 1889.

No. 1.—*The 6th February, 1889.—Mr. F. J. Branthwaite*, Assistant Conservator of Forests, reported himself for duty at Minbu Forest office on the forenoon of the 20th January, 1889.

No. 2.—*Mr. A. F. Broun*, Deputy Conservator of Forests, and *Mr. C. E. Muriel*, Deputy Conservator of Forests, respectively made over and assumed charge of the Minbu Division on the morning of the 28th December, 1888.

No. 3.—*The 19th February, 1889.—Mr. H. N. Thompson*, Assistant Conservator of Forests, reported himself for duty at the Pyinmana Forest office on the forenoon of the 21st January, 1889.

No. 33.—*The 26th February, 1889.—Mr. H. Slade*, Officiating

Deputy Conservator of Forests, 2nd grade, reverts to his substantive rank as Deputy Conservator of Forests, 3rd grade, with effect from the 1st February, 1889.

No. 34.—*Mr. L. A. W. Rind*, Deputy Conservator of Forests, 3rd grade, is promoted to Deputy Conservator of Forests, 2nd grade, with effect from the 1st February, 1889.

No. 42.—*The 12th March, 1889.*—Under the provisions of Section 74 of the Civil Leave Code, privilege leave from the 14th to the 25th January, 1889, was granted to *Mr. A. Weston*, Deputy Conservator of Forests.

10.—BERAR GAZETTE—

Nil.

11.—MYSORE GAZETTE—

Nil.

IV. EXTRACTS FROM OFFICIAL GAZETTES.

1.—GAZETTE OF INDIA—

No. 326.—*The 29th March, 1889.*—With reference to the Notification of the Government of Bombay, No. 2095, dated the 18th March, 1889, *Mr. S. Hornidge*, Officiating Deputy Conservator of Forests, 4th grade, Bombay Presidency, is transferred temporarily to the Central Provinces.

No. 349.—*The 18th April, 1889.*—With reference to the Notification of this Department No. 815F., dated 3rd August, 1888, *Mr. C. F. Elliott*, Officiating Deputy Conservator of Forests, 1st grade, Punjab, reverted on the forenoon of the 19th July, 1888, to his substantive appointment of Deputy Conservator, 2nd grade, on the return from privilege leave of *Captain C. W. Losack*, Deputy Conservator, 1st grade, Central Provinces.

2.—MADRAS GAZETTE—

No. 81.—*The 27th March, 1889.*—*Mr. A. W. C. Stanbrough*, Deputy Conservator of Forests, has been granted by the Right Honorable the Secretary of State for India extension of furlough for three months on medical certificate.

The 29th March, 1889.—*Mr. J. S. Grogan*, Forest Ranger, 5th grade, under transfer to the Tinnevelly District, fifteen days' privilege leave, under Section 138 of the Civil Leave Code.

No. 97.—*The 1st April, 1889.*—His Excellency the Governor in Council is pleased, in modification of Notification No. 355, published at page 833 of the *Fort St. George Gazette*, Part I., dated 25th October, 1887, to appoint *M.R.Ry. D. Jagannadha Row Pantulu Garu*, Special Deputy Collector on Forest Settlement Duty, as Forest Settlement Officer in respect of the Ramasaram proposed reserved forest.

No. 86.—*The 13th April, 1889.*—*Mr. G. Homfray*, District Forest Officer, Kistna, privilege leave for three months, under Section 74 of the Civil Leave Code, 6th edition.

No. 88.—*Mr. H. H. Ward*, Forest Ranger, Kurnool, to act as District Forest Officer, Kurnool.

No. 89.—*Mr. W. R. Newman*, Forest Ranger, Ganjam, to act as District Forest Officer, Ganjam, during the absence of *Mr. A. W. Lushington* on leave, or until further orders.

No. 96.—*Mr. P. M. Lushington*, District Forest Officer, Kurnool, to be District Forest Officer, Kistna.

3.—BOMBAY GAZETTE—

No. 2286.—*The 25th March, 1889.—Mr. Haripad Mitra, L.C.E.*, Sub-Assistant Conservator of Forests, 3rd grade, is allowed privilege leave of absence for three months.

The 8th April, 1889.—Messrs. S. Hornidge, A.M.I.C.E., Assistant Conservator of Forests, 1st grade, and *H. Mainwaring*, Deputy Conservator of Forests, 3rd grade, respectively delivered over and received charge of the office of the Divisional Forest Officer, Sholápur, on the afternoon of the 26th March, 1889.

The 11th April, 1889.—Mr. W. R. Woodrow, Deputy Conservator of Forests, Southern Division, Kánara, received charge of the office of his Sub-Assistant from *Mr. Sheshu Manju*, Sub-Assistant Conservator of Forests, on the 30th March, 1889, after office hours.

Messrs. G. K. Betham and *G. A. Hight* respectively delivered over and received charge of the office of the Divisional Forest Officer, Bijápur, on the 1st April, 1889, before office hours.

4.—CALCUTTA GAZETTE—

The 22nd March, 1889.—Mr. J. C. Mendes, Sub-Assistant Conservator of Forests, 3rd grade, is transferred temporarily to the Central Provinces.

The 30th March, 1889.—Mr. H. H. Davis, Deputy Conservator of Forests, is granted privilege leave for three months, under the provisions of Section 71 of the Civil Leave Code, with effect from the 29th April, 1889, on being relieved of the charge of the Chota Nagpur Forest Division and of the Hazaribagh sub-division of that Division by *Mr. C. A. G. Lillingston*, Deputy Conservator of Forests.

Mr. R. Quinnell, Probationer, on return from the Forest School at Dehra Dún, is attached to the Chota Nagpore Division for duty, and will assume charge of the Palamow sub-division of that Division from *Mr. Lillingston*, with effect from the 29th April, 1889.

The 9th April, 1889.—For the "21st April, 1889," *read* the "1st April, 1889," as the date of the notification, published in the *Calcutta Gazette* of the 3rd idem, making arrangements in the Forest Department consequent on the temporary transfer of *Mr J. C. Mendes*, Sub-Assistant Conservator of Forests, to the Central Provinces.

The 10th April, 1889.—Mr. M. S. Fowler, Deputy Conservator of Forests, is allowed furlough for 15 months, under Section 50, Chapter V. of the Civil Leave Code, with effect from the 1st May, 1889, or from such subsequent date as he may avail himself of it.

The 15th April, 1889.—In the notification, dated the 12th September, 1880, prescribing rules for the registration of boats in the Sunderbans forests, *for* the tolls stations Nos. 18, 20, and 22, *viz.*, Bhitabhanga, Arnamongla, and Phoolhatta, *substitute* "Dacope," "Shella," and "Jewdhara," respectively.

The following transfers are ordered:—

Mr. H. D. D. French, Assistant Conservator of Forests, attached to the Darjeeling Sub-division, to the charge of the Kurseong Sub-division of the Darjeeling Forest Division.

Mr. C. G. Rogers, Assistant Conservator of Forests, from the Kurseong to the charge of the Darjeeling Sub-division of that Division.

Mr. F. B. Manson, Deputy Conservator of Forests, Darjeeling Division, to the charge of the Working Plans Division, in addition to his other duties.

With reference to the notification of 20th December, 1888, *Mr. E. E. Slane*, Sub-Assistant Conservator of Forests, after being relieved of the charge of the Palamow Sub-division of the Chota Nagpore Forest Division by *Mr. C. A. G. Lillingston*, Deputy Conservator, on the afternoon of 26th January, 1889, was in charge of the Northern Range of that Sub-division, from 6th to 15th February, 1889, inclusive, and assumed charge of the Singbhoom Sub-division of the Chota Nagpore Forest Division from *Babu Sreedhur Chuckerbutty*, Sub-Assistant Conservator of Forests, on the after noon of the 5th March, 1889.

The 16th April, 1889.—In the notification, dated the 30th March, 1889, granting *Mr. H. H. Davis*, Deputy Conservator of Forests, privilege leave for three months, *for* the "29th April, 1889," *read* the "22nd April,1889," as the date on which *Mr. R. Quinnell*, Probationer, on return from the Dehra Dún Forest School, will assume charge of the Palamow Forest Sub-division.

The 21st April, 1889.—With reference to the notification, dated the 22nd March, 1889, transferring *Mr. J. C. Mendes*, Sub-Assistant Conservator of Forests, temporarily to the Central Provinces, the following arrangements are ordered :—

Mr. F. B. Manson, Deputy Conservator of Forests, Darjeeling Division, will hold temporary charge of the Teesta Forest Sub-division, *vice Mr. Mendes*, in addition to his own duties, until relieved by *Mr. Wylly*.

Mr. E. E. Wylly, Sub-Assistant Conservator of Forests, attached to the Sunderbans Forest Division, is posted to the charge of the Teesta Sub-division of the Darjeeling Forest Division.

5.—NORTH-WESTERN PROVINCES AND OUDH GAZETTE—

Nil.

6.—PUNJAB GAZETTE—

No. 164.—*The 3rd April, 1889.*—With reference to Government of India Notification No. 250 F., dated the 15th of March, 1889, appointing *Mr A. V. Monro* to be an Assistant Conservator of Forests, 3rd grade, and posting him to the Punjab, it is hereby notified that *Mr. Monro* reported his arrival at Lahore on the forenoon of the 11th January, 1889, and was posted from that date to the Mooltan Division.

No. 170.—*The 10th April, 1889.*—*Mr. J. L. Pigot*, Assistant Conservator of Forests, assumed charge of the Ráwalpindi Divi-

sion on the afternoon of the 16th March, 1889, in addition to his duties as Personal Assistant to the Conservator of Forests, Punjab, relieving *Mr. E. Forrest*, Deputy Conservator of Forests, who proceeded from that date on 15 days' privilege leave granted to him in Punjab Government's letter No. 95, dated 16th February, 1889.

No. 173.—*Mr. J. L. Pigot*, Assistant Conservator of Forests, and *Mr. E. Forrest*, Deputy Conservator of Forests, respectively made over and assumed charge of the Ráwalpindi Forest Division on the forenoon of 26th March, 1889, on the return of the latter from the privilege leave granted to him in Punjab Government's letter No. 95, dated 16th February, 1889.

7.—ASSAM GAZETTE—

No. 105.—*The 4th April, 1889.*—The extension of leave for ten days granted to *Mr. F. S. Barker*, Officiating Deputy Conservator of Forests, Assam, by Notification No. 16, dated the 21st January, 1889, is hereby cancelled.

8.—CENTRAL PROVINCES GAZETTE—

No. 2371.—*The 16th April, 1889.*—Consequent on the retirement from the service of *Mr. W. Jacob*, Deputy Conservator of Forests, 1st grade, the following promotions are made, with effect from the 1st January, 1889:—

Mr. R. H. C. Whittall, Deputy Conservator of Forests, 3rd grade, and Officiating Conservator of Forests, 3rd grade, Punjab, to be Deputy Conservator of Forests, 2nd grade, on the Central Provinces-Berar and Coorg list.

Mr. G. H. Foster, Officiating Deputy Conservator of Forests, 3rd grade, is confirmed in that grade.

Mr. E. Dobbs, Deputy Conservator of Forests, 4th grade, sub. *pro. tem.*, is confirmed in that grade.

Mr. W. King, Officiating Deputy Conservator of Forests, 4th grade, to be Deputy Conservator of Forests, 4th grade, sub. *pro tem.*

Mr. F. C. Hicks, Assistant Conservator of Forests, 1st grade, sub. *pro tem.*, is confirmed in that grade.

Mr. G. F. Taylor, Officiating Assistant Conservator of Forests, 1st grade, to be Assistant Conservator of Forests, 1st grade, sub. *pro tem.*

No. 2372.—During the absence of *Mr. R. H. C. Whittall*, Deputy Conservator of Forests, 2nd grade, and until further orders, *Mr. F. B. Dickinson*, Deputy Conservator of Forests, 3rd grade, in Coorg, will officiate as Deputy Conservator of Forests, 2nd grade.

Mr. G. F. Prevost, Deputy Conservator of Forests, 4th grade, in Berar, will officiate as Deputy Conservator of Forests, 3rd grade.

Mr. H. Moore, Assistant Conservator of Forests, 1st grade, will officiate as Deputy Conservator of Forests, 4th grade.

Mr. H. B. Anthony, Assistant Conservator of Forests, 2nd grade, will officiate as Assistant Conservator of Forests, 1st grade.

No. 2373.—Consequent on the departure on furlough of *Captain C. W. Losack*, Deputy Conservator of Forests, 1st grade, the following promotions are made, with effect from the 2nd March, 1889 :—

Mr. J. McKee, Deputy Conservator of Forests, 3rd grade, to officiate as Deputy Conservator of Forests, 2nd grade.

Mr. E. Dobbs, Deputy Conservator of Forests, 4th grade, to officiate as Deputy Conservator of Forests, 3rd grade.

Mr. G. F. Taylor, sub. *pro tem.* Assistant Conservator of Forests, 1st grade, in Berar, to officiate as Deputy Conservator of Forests, 4th grade.

Mr. H. B. Anthony, Officiating Assistant Conservator of Forests, 1st grade, to be Assistant Conservator of Forests, 1st grade, sub. *pro tem.*

Mr. A. E. Lowrie, Assistant Conservator of Forests, 2nd grade, to officiate as Assistant Conservator of Forests, 1st grade.

No. 2391.—*The 17th April, 1889.—Mr. Mahomed Ghouse*, Sub-Assistant Conservator of Forests, 2nd grade, on Rs. 200, is promoted to Sub-Assistant Conservator of Forests, 1st grade, on Rs. 250 per mensem, with effect from the 1st March, 1889.

No. 2434.—With reference to the Notification by the Government of India, Revenue and Agricultural Department, No. 326 F. of the 29th March, 1889, *Mr. S. Hornidge*, Officiating Deputy Conservator of Forests, reported his arrival at Nagpur on the afternoon of the 29th March, 1889.

Mr. Hornidge is posted to the charge of the forests of the Nagpur and Wardha Districts, of which he received charge from *Mr. A. Watson*, Assistant Conservator of Forests, on the forenoon of the 30th March, 1889.

Mr. A. Watson, Assistant Conservator of Forests, is attached to the Direction Division, from the afternoon of the 30th March, 1889.

9.—BURMA GAZETTE—

No. 47.—*The 28th March, 1889.—Mr. H. Carter*, Assistant Conservator of Forests, is transferred from the Working Plans Division to the Tharrawaddy Forest Division.

No. 49.—*The 2nd April, 1889.*—The following promotions are ordered in the Forest Department :—

With effect from the 28th December, 1888, consequent on the transfer from Burma of *Mr. A. F. Broun* :

Mr. H. B. Ward, Deputy Conservator of Forests, 4th grade, to be Deputy Conservator of Forests, 3rd grade.

With effect from the 14th February, 1889, consequent on the appointment of *Mr. J. W. Oliver*, to officiate as a Conservator :

Mr. H. Slade, Deputy Conservator of Forests, 3rd grade, to officiate as Deputy Conservator of Forests, 2nd grade.

Mr. J. E. Copeland, Deputy Conservator of Forests, 4th grade, to officiate as Deputy Conservator of Forests, 3rd grade.

10.—BERAR GAZETTE—

Nil.

11.—MYSORE GAZETTE—

No. 2178.—*The 28th March, 1889.*—*Mr. C. E. M. Russell*, Superintendent of Forests, Mysore District, is granted three months' Examination leave from such date as he may avail himself of the same.

IV. EXTRACTS FROM OFFICIAL GAZETTES.

1.—GAZETTE OF INDIA—

No. 382.—*The 3rd May, 1889.*—Consequent on the grant of three months' privilege leave to *Mr. H. H. Davis*, Deputy Conservator of Forests, 1st grade, Bengal, *Mr. C. F. Elliott*, Deputy Conservator, 2nd grade, Punjab, is appointed to officiate in the 1st grade of Deputy Conservators, with effect from 29th April, 1889, and until further orders.

2.—MADRAS GAZETTE—

The 22nd April, 1889.—The undermentioned officers, who have returned with Rangers' Certificates from the Forest School, Dehra Dún, are posted to the districts named against each :—

V. Alwar Chetty, Sub-Assistant Conservator, 2nd grade—Kurnool District.

Mr. T. N. Hearsey, 2nd grade—Kistna District.

Mr. W. R. McCay, Forest Ranger, 5th grade—Anantapur District.

The undermentioned officer having successfully passed through and obtained the Rangers' Certificate from the Forest School at Dehra Dún, the Conservator of Forests, Northern Circle, is pleased to confirm him in his appointment with effect from 24th April, 1889 :—

Mr. W. R. McCay to be Forest Ranger, 5th grade.

No. 100.—*The 25th April, 1889.*—*Mr. C. P. Howell*, Sub-Assistant Conservator of Forests, to act as District Forest Officer, South Arcot, with effect from 28th February, 1889, *vice Mr. Wooldridge*, deceased.

The 1st May, 1889.—*Mr. C. P. Howell*, Sub-Assistant Conservator, 2nd grade, to act as Sub-Assistant Conservator, 1st grade (sub. *pro tem.*), with effect from 28th February, 1889.

No. 113.—*The 2nd May, 1889.*—The following promotions were made with effect from 8th March, 1889 :—

Mr. E. D. Hooper, from Acting Deputy Conservator, 2nd grade, to Acting Deputy Conservator, 1st grade.

Mr. H. A. Gass, from Acting Deputy Conservator, 3rd grade, to Acting Deputy Conservator, 2nd grade.

Mr. C. E. Brasier, from Acting Deputy Conservator, 4th grade, to Acting Deputy Conservator, 3rd grade.

Mr. J. S. Battie, from Acting Assistant Conservator, 1st grade, to Acting Deputy Conservator, 4th grade.

No. 112.—*The 6th May, 1889.—M.R.Ry. V. Alwar Chetty Garu,* B.A., Sub-Assistant Conservator of Forests, to act as District Forest Officer, Kistna, during the absence of *Mr. G. Homfray* on leave, or until further orders.

The undermentioned officers of the Southern Circle have obtained Forest Ranger's Certificates at the Imperial Forest School, Dehra Dún:—

Mr. F. C. M. Mascarenhas, with Honors in Vegetable Morphology and Physiology.

C. Subramania Aiyar, with Honors in Forest Law.

Mr. J. W. Ryan.

The following promotions and postings were made:—

Mr. F. C. M. Mascarenhas, from Forester, 1st grade, to Ranger, 5th grade, and posted to Chingleput, on probation till 31st March, 1890.

C. Subramania Aiyar, from Forester, 2nd grade, to Ranger, 5th grade, and posted to North Arcot, on probation till 31st March, 1890.

T. Narayanaswami Aiyar, Forest Ranger, 4th grade, transferred from Chingleput to North Coimbatore.

Mr. J. W. Ryan, Forester, 1st grade, privilege leave under Section 138 of the Civil Leave Code, with effect from 29th April, 1889.

No. 121.—*The 8th May, 1889.—Mr. F. d'A. Vincent,* Deputy Conservator of Forests, 2nd grade, has been granted by the Right Honorable the Secretary of State an extension of furlough for six months on sick certificate.

The 11th May, 1889.—Mr. A. M. Clay, Ranger, 5th grade, North Arcot, privilege leave for one month, under Section 138 of the Civil Leave Code, with effect from 18th April, 1889.

Mr. A. F. X. Saldanha, Ranger, 5th grade, North Malabar, privilege leave for three months, under Section 138 of the Civil Leave Code, from date of relief by Ranger *Malaya Pillai.*

T. Malaya Pillai, Ranger, 5th grade, transferred from Tinnevelly to North Malabar Division.

3.—BOMBAY GAZETTE—

The 22nd April, 1889.—Mr. Shesho Manju, Sub-Assistant Conservator of Forests, Southern Division, Kánara, reported himself for duty on the 13th instant, before office hours, under *Mr. E. G. Oliver,* Divisional Forest Officer, Working Plans Branch No. II.

No. 3150.—*The 30th April, 1889.*—His Excellency the Governor in Council is pleased to make the following appointments*:—

Mr. G. M. Ryan, 2nd grade Assistant Conservator, to be 1st grade Assistant Conservator of Forests, *vice Mr. H. E. Andrewes* retired, with effect from November 11th, 1888.

With effect from 21st October, 1888—

Mr. Lakshman Dáji Joshi, 2nd grade Sub-Assistant, to be 1st

---

* NOTE.—These promotions are subject to re-consideration should the scheme for re-organisation of the department render this necessary.

grade Sub-Assistant Conservator of Forests, *vice Mr. M. D'Cruz*, retired.

Mr. Váman Rámchandra Gaundi, 3rd grade Sub-Assistant, to be 2nd grade Sub-Assistant Conservator of Forests, *vice Mr. Lakshman Dáji Joshi*, promoted.

With effect from the 7th January, 1889—

Mr. Neribdás valad Jethmal, 2nd grade Sub-Assistant, to be 1st grade Sub-Assistant Conservator of Forests, *vice Mr. Náráyan Ballál Oke*, retired.

Mr. J. M. Fernandez, 3rd grade Sub-Assistant, to be 2nd grade Sub-Assistant Conservator of Forests, *vice Mr. Neribdás valad Jethmal*, promoted.

Mr. A. R. Maidment to be 3rd grade Sub-Assistant Conservator with effect from October 21st, 1888.

A'zam Shesho Manju to be 3rd grade Sub-Assistant Conservator, with effect from the 7th January, 1889.

Mr. J. Baptista, L.C.E., to act as Sub-Assistant Conservator, 3rd grade, *vice A'zam Shesho Manju*, pending further orders.

No. 3210.—*The 1st May, 1889.*—His Excellency the Governor in Council is pleased to appoint *Mr. R. P. Ryan* to do duty as Divisional Forest Officer, Bijápur.

No. 3371.—*The 7th May, 1889.*—His Excellency the Governor in Council is pleased to appoint *Mr. Tuljárám Nihálchand* to be Sub-Assistant Conservator, 3rd grade, substantive *pro. tem.*, *vice Mr. W G. Clabby*, whose services have been lent to the Political Department for employment in the Rájpipla State.

4.—CALCUTTA GAZETTE—

The 29th April, 1889.—*Mr. R. Quinnell*, Sub-Assistant Conservator of Forests, on probation, is appointed to be a Sub-Assistant Conservator of Forests, 3rd grade, with effect from the 27th March, 1889.

The 11th May, 1889.—*Mr. M. S. Fowler*, Deputy Conservator of Forests, having been relieved of his duties on the forenoon of 1st May, 1889, preparatory to availing himself of the furlough granted to him in the notification of 10th April, 1889, the following temporary promotions are made with effect from that date:—

Mr. R. L. Heinig, Assistant Conservator of Forests, 1st grade, to officiate as Deputy Conservator, 4th grade.

Mr. C. G. Rogers, Assistant Conservator of Forests, 2nd grade, to officiate as Assistant Conservator, 1st grade.

5.—NORTH-WESTERN PROVINCES AND OUDH GAZETTE—

No. $\frac{1799}{\text{II-456A-34}}$.—*The 2nd May, 1889.*—*Mr. A. G. Hobart-Hampden*, Assistant Conservator of Forests, 1st grade, on return from furlough, to the Kumaun Forest Division of the Central Circle, with effect from the 27th March, 1889.

No. $\frac{1859}{\text{II-709-41}}$.—*The 7th May, 1889.*—*Mr. M. H. Clifford*, Assistant Conservator of Forests, 1st grade, extraordinary leave, without allowances, for one year, in extension of the leave granted to him

by this Department Notification No. $\frac{3254}{\text{II-709-35}}$, dated 22nd August, 1888.

6.—PUNJAB GAZETTE—

No. 191.—*The 23rd April, 1889.*—*Messrs. J. L. Pigot* and *G. S. Hart*, Assistant Conservators of Forests, respectively made over and received charge of the Direction Forest Division and the duties of Personal Assistant to Conservator of Forests on the afternoon of the 29th of March, 1889.

No. 192.—*Messrs. J. L. Pigot* and *G. S. Hart*, Assistant Conservators of Forests, respectively delivered over and assumed charge of the Working Plans Branch of the office of the Conservator of Forests on the afternoon of the 29th March, 1889.

No. 203.—*The 1st May, 1889.*—*Bábu Fazl Dín*, Sub-Assistant Conservator of Forests, is granted three months' privilege leave of absence, under Section 138 of the Civil Leave Code, with effect from the forenoon of 19th April, 1889.

No. 210.—*The 8th May, 1889.*—*Bábu Híra Singh*, Probationary Sub-Assistant Conservator of Forests, made over charge of his duties in the Mooltan Forest Division on the afternoon of the 22nd April, 1889, and has been attached to the Montgomery Division until further orders.

No. 216.—*The 11th May, 1889.*—*Mr. L. G. Smith*, Deputy Conservator of Forests, and *Mr. J. L. Pigot*, Assistant Conservator of Forests, respectively made over and assumed charge of the Kulu Forest Division on the afternoon of the 13th of April, 1889, on the departure of the former on one year's furlough.

No. 217.—Consequent on the departure on furlough of *Mr. L. G. Smith*, Deputy Conservator of Forests, 4th grade, the following temporary promotions will have effect from the 14th April, 1889, and until further orders:—

Mr. J. L. Pigot, Assistant Conservator of Forests, 1st grade, to officiate as Deputy Conservator of Forests, 4th grade;

Mr. G. S. Hart, Assistant Conservator of Forests, 2nd grade, to officiate as Assistant Conservator, 1st grade.

No. 218.—*Mr. L. G. Smith*, Deputy Conservator of Forests, is granted furlough for one year, under Section 132 of the Civil Leave Code, with effect from the 28th of April, 1889.

No. 219.—With reference to *Punjab Gazette* Notification No. 218 of this date, *Mr. L. G. Smith*, Deputy Conservator of Forests, reported his departure from India (Karáchi) on the forenoon of the 28th of April, 1889.

7.—ASSAM GAZETTE—

No. 13.—*The 10th January, 1889.*—General Department Notifications Nos. 352, 353, dated the 19th December, 1888, published in the *Assam Gazette*, dated the 22nd idem, confirming *Mr. F. S. Barker* in the 4th grade of Deputy Conservator of Forests, and *Mr. T. J. Campbell* in the 1st grade of Assistant Conservator of Forests, are hereby cancelled.

8.—CENTRAL PROVINCES GAZETTE—

No. 2572.—*The 24th April, 1889.*—*Mr. J. J. Hobday*, Probationary Sub-Assistant Conservator of Forests, is appointed Sub-Assistant Conservator of Forests, 3rd grade, sub *pro tem.*, with effect from the 27th March, 1889.

No. 2686.—*The 29th April, 1889.*—*Mr. J. C. Mendes*, Sub-Assistant Conservator of Forests, temporarily transferred from Bengal to these Provinces, reported his arrival at Nagpur on the forenoon of the 13th April, 1889.

Mr. Mendes is posted to the Jubbulpore District, to take up the duties of District Forest Officer, *vice Mr. Mahadeo Rao Pulnaitkar*, deceased.

No. 2734.—*The 30th April, 1889.*—On being relieved by *Mr. F. S. Barker*, Officiating Deputy Conservator of Forests, *Mr. Chander Kumar Chatterjee*, Sub-Assistant Conservator of Forests, is transferred from Sambalpur to the Damoh District.

No. 2844.—*The 7th May, 1889.*—With reference to the Notification by the Government of India, Revenue and Agricultural Department, No. 259F., of the 15th March, 1889, *Mr. F. S. Barker*, Officiating Deputy Conservator of Forests, 4th grade, reported his arrival at Nagpur on the forenoon of the 24th April, 1889.

Mr. Barker is posted as District Forest Officer to the Sambalpur District.

9.—BURMA GAZETTE—

No. 123.—*The 17th April, 1889.*—At a departmental examination held at Mandalay on the 2nd April, 1889, the undermentioned candidate passed in Burmese by the Lower Standard:—

Mr. R. C. Dun, Sub-Assistant Conservator of Forests.

No. 4.—*The 25th April, 1889.*—*Mr. H. Carter*, Assistant Conservator of Forests, relinquished charge of his duties in connection with the Working Plans Division on the afternoon of the 25th ultimo, and reported himself for duty in the Tharrawaddy Division on the forenoon of the 28th idem.

No. 68.—*The 7th May, 1889.*—*Mr. R. C. Dun*, Probationary Sub-Assistant Conservator of Forests, is confirmed in his appointment, with effect from the 2nd April, 1889.

10.—MYSORE GAZETTE—

No. 12.—*The 23rd April, 1889.*—*Mr. Bapu Rao*, Sub-Assistant Conservator in charge of Plantations, Bangalore, is granted 10 days' casual leave from such date as he may avail himself of the same, under the terms of Proceedings No. 7140-7—200 of the 5th February, 1889.

No. 17.—*The 24th April, 1889.*—*Mr. C. E. M. Russell*, Superintendent of Forests, is transferred from the Mysore to the Bangalore District.

Mr. C. Narayana Rao, Assistant Conservator of Forests, is transferred from the Bangalore to the Mysore District.

Mr. S. A. Bapu Rao, Sub-Assistant Conservator of Forests and Officer in charge of Plantations, is appointed to act as Superintendent of Forests, Bangalore District, during the absence of *Mr. Russell* on leave or until further orders.

No. 28.—*The 3rd May, 1889.*—*Mr. C. Nārayan Rao*, Assistant Conservator of Forests, Bangalore, delivered over charge of his office to *Mr. F. B. Clerk* on the 17th April, 1889.

11.—BERAR GAZETTE—

Nil.

IV. Extracts from Official Gazettes.

1.—Gazette of India—

No. 623.—*The 21st June, 1889.—Mr. J. E. Barrett*, Officiating Assistant Conservator of Forests, 1st grade, Ajmere, is re-transferred to the Punjab.

2.—Madras Gazette—

No. 126.—*The 17th May, 1889.—Mr. T. P. Peake*, District Forest Officer, South Canara, privilege leave for three months under Section 74 of the Civil Leave Code, sixth edition.

No. 127.—*Mr. C. E. Brasier*, District Forest Officer, Tinnevelly, privilege leave for three months under Section 74 of the Civil Leave Code, sixth edition.

No. 135.—*Mr. J. G. F. Marshall*, Sub-Assistant Conservator of Forests, South Coimbatore, to act as District Forest Officer, Tinnevelly, during the absence of *Mr. Brasier* on leave.

No. 128.—*The 18th May, 1889.—Mr. P. M. Lushington*, Assistant Conservator of Forests, Kurnool, is granted two months' Examination leave under the provisions of Section 51 of the Madras Forest Department Code.

No. 129.—The two months' privilege leave granted to *Mr. A. W. Peet*, Acting Conservator of Forests, Southern Circle, by Notification No. 1, dated 7th January, 1889, published at page 5 of the *Fort St. George Gazette* (Part I.), has been extended by one day.

No. 139.—*The 23rd May, 1889.—Mr. E. D. M. Hooper*, Acting District Forest Officer, Salem, privilege leave for two months and twenty-three days, under Section 74 of the Civil Leave Code, sixth edition, with effect from 1st June, 1889.

No. 140.—*Mr. C. J. Wouterez*, Probationary Sub-Assistant Conservator of Forests, Salem, to act as District Forest Officer, Salem, during the absence of *Mr. E. D. M. Hooper* on leave.

No. 141.—*Mr. W. P. Rego*, Ranger, South Canara, to act as District Forest Officer, South Canara, during the absence of *Mr. T. P. Peake* on leave.

The 18th June, 1889.—The following appointments are made with effect from the 27th March, 1889 :—

M. R. Ry. V. Alwar Chetty, B.A., to be Sub-Assistant Conservator, 2nd grade.

Mr. T. N. Hearsey, to be Sub-Assistant Conservator, 2nd grade.

No. 182.—*The 6th July, 1889.—Mr. T. N. Hearsey*, Probationary

Sub-Assistant Conservator of Forests, to act as District Forest Officer, Kurnool, during the absence of *Mr. P. M. Lushington* on leave.

No. 184.—*Mr. C. Somers Smith*, Assistant Conservator of Forests, Trichinopoly, has been granted by the Right Honorable the Secretary of State an extension of six months' extraordinary leave on medical certificate without pay.

No. 186.—The three months' privilege leave granted to *Mr. J. S. Battie*, District Forest Officer, Godavari, by Notification No. 151, published at page 380, Part I. of the *Fort St. George Gazette*, dated 11th June, 1889, is hereby cancelled.

No. 187.—Notification No. 154, published at page 380, Part I. of the *Fort St. George Gazette*, dated 11th June, 1889, appointing *Mr. H. Stafford*, Sub-Assistant Conservator of Forests, as District Forest Officer, Godavari, is hereby cancelled.

Privilege leave is granted to *Mr. H. Kelly*, Ranger, 5th grade, on probation, Madura, for 15 days, from 17th May, 1889.

The one month and nine days' privilege leave granted to Ranger *Mr. W. P. Rego*, and notified in the *Fort St. George Gazette* of 28th May, 1889, Part II., page 784, is extended to 10th May, 1889, inclusive.

3.—Bombay Gazette—

The 23rd January, 1889.—Messrs. Joseph Baptista, L.C.E., Range Forest Officer, Bassein, and *A. R. Maidment*, Sub-Assistant Conservator of Forests, North Thána B Sub-Division, respectively delivered over and received charge of the B Sub-Divisional office, North Thána, on the 22nd December, 1888, after office hours.

The 23rd May, 1889.—Mr. N. D. Satarawála, Acting Sub-Assistant Conservator of Forests, who proceeded on sick leave on the 23rd December, 1888, before office hours, resumed charge of his duty in the forenoon of the 23rd April, 1889.

The 29th May, 1889.—Messrs. J. H. Clabby, Acting Sub-Assistant Conservator, and *Joseph Baptista*, L.C.E., respectively delivered over and received charge of the office of the A Sub-Division, North Thána, on the 21st May, before office hours.

Messrs. G. P. Millet, Divisional Forest officer, South Thána, and *J. H. Clabby*, Acting Sub-Assistant Conservator of Forests, respectively delivered over and received charge of the B Sub-Divisional Forest office, South Thána, on the 22nd May, 1889, before office hours.

No. 3916.—*The 30th May, 1889.*—His Excellency the Governor in Council is pleased to transfer *Mr. A. Stewart*, Deputy Conservator of Forests, Sind Circle, to the Northern Circle.

The 1st July, 1889.—Mr. A. Stewart, Deputy Conservator of Forests, 4th grade, reported his arrival at Bombay to the Conservator of Forests, Northern Circle, by wire on the 25th June, 1889, in the afternoon, and as instructed reported himself at the office of the undersigned at Poona on the morning of the 27th June, 1889, in obedience to Government Resolution No. 3916, dated 30th May, 1889, in the Revenue Department, transferring his services to the Northern Circle.

The 3rd July, 1889.—Mr. A. Stewart, Deputy Conservator of Forests, 4th grade, reported himself for duty as Assistant to the Divisional Forest Officer, Poona, on the 27th June, 1889, before office hours.

The 5th July, 1889.—Messrs. R. Ryan, Assistant Conservator of Forests, and *G. K. Betham*, Deputy Conservator of Forests, respectively delivered over and took charge of the Kolába and the Ratnágiri Forest Divisions on the 1st instant, before office hours.

4.—CALCUTTA GAZETTE—

The 27th May, 1889.—Mr. M. S. Fowler, Deputy Conservator of Forests, who was granted furlough for 15 months under the Notification of the 10th April, 1889, reported his departure from India on the 10th instant.

The 28th May, 1889.—The following temporary promotions are made, with effect from 11th May, 1889, during the absence, on leave, of *Mr. H. H. Davis*, Deputy Conservator of Forests, or until further orders:—

Mr. G. A. Richardson, Deputy Conservator of Forests, 3rd grade, to officiate in the 2nd grade.

Mr. C. A. G. Lillingston, Deputy Conservator of Forests, 4th grade, to officiate in the 3rd grade.

Mr. C. G. Rogers, Officiating Assistant Conservator of Forests, 1st grade, to officiate in the 4th grade of Deputy Conservators.

In modification of the Notifications dated the 30th March and the 16th April, 1889, published, respectively, in the *Calcutta Gazettes* of the 3rd and the 17th April, 1889, the following postings of officers were made with effect from the dates specified:—

Mr. R. Quinnell, Sub-Assistant Conservator of Forests, to the charge of the Singbhoom Sub-Division of the Chota Nagpur Forest Division, of which he assumed charge on the afternoon of 27th April, 1889.

Mr. E. E. Slane, Sub-Assistant Conservator of Forests, on making over charge of the Singbhoom Sub-Division to *Mr. R. Quinnell*, to the charge of the Palamow Sub-Division, of the Chota Nagpur Forest Division, of which he assumed charge from *Mr. C. A. G. Lillingston*, on the forenoon of 11th May, 1889.

17th July, 1889.—Mr. E. E. Slane, Sub-Assistant Conservator of Forests, has passed the departmental examination in Land Revenue Systems of Bengal, *with credit.*

Mr. H. D. D. French, Assistant Conservator of Forests, has passed the departmental examination in Forest Law.

5.—NORTH-WESTERN PROVINCES AND OUDH GAZETTE—

No. $\frac{2118}{\text{II-86A-1-9}}$.—*The 17th May, 1889.*—With effect from the 23rd March, 1889, the date on which *Mr. J. M. Braidwood*, Deputy Conservator of Forests, 3rd grade, proceeded on subsidiary leave, preparatory to furlough—

Mr. S. E. Wilmot, Deputy Conservator of Forests, 4th grade, to officiate as Deputy Conservator of Forests, 3rd grade.

No. $\frac{2119}{\text{II-86A-2-9}}$.—With effect from the 27th March, 1889, the date on which he returned from furlough and took charge of his duties—*Mr. A. G. Hobart-Hampden*, Assistant Conservator of Forests, 1st grade, to officiate as Deputy Conservator of Forests, 4th grade.

No. $\frac{489F}{967\text{-}4}$.—*The 26th June, 1889.*—Under Sections 67, 71 and 75 of the Indian Forest Act (VII. of 1878) *Bábu Raghunath Pathak*, Sub-Assistant Conservator of Forests, Gorakhpur Division, is invested with the powers conferred on Sub-Assistant Conservators in charge of Forest Divisions by Notifications Nos. 301, 302 and 304, dated 28th February, 1880.

No. $\frac{2969}{\text{II-861A-2}}$.—*The 10th July, 1889.*—*Mr. A. Campbell*, Assistant Conservator of Forests, in charge of the Gorakhpur Division, privilege leave for two months and 15 days, with effect from the 1st August, 1889, or subsequent date.

6.—PUNJAB GAZETTE—

No. 234.—*The 4th June, 1889.*—*Mr. R. J. P. Pinder*, Assistant Conservator of Forests, and *Bábu Hira Singh*, Probationary Sub-Assistant Conservator, respectively made over and assumed charge of the Montgomery Forest Division on the afternoon of the 7th May, 1889.

No. 108.—*The 15th June, 1889.*—The promotion of *Mr. R. J. P. Pinder*, Officiating Assistant Conservator of Forests, to be Assistant Conservator 1st grade, sub. *pro tem.*, notified in *Punjab Government Gazette* Notification No. 120, dated the 5th March, 1887, will have effect from the 22nd December, 1888, instead of the 1st December, 1888.

No. 245.—*The 18th June, 1889.*—*Mr. R. J. P. Pinder*, Assistant Conservator of Forests, on relief by *Bábu Hira Singh* of the charge of the Montgomery Forest Division, is attached to the Chamba Forest Division with effect from the forenoon of the 15th May, 1889.

7.—ASSAM GAZETTE—

No. 49.—*The 16th May, 1889.*—The Chief Commissioner is pleased to appoint *Mr. T. J. Campbell*, Assistant Conservator of Forests, to be an Honorary Magistrate in the Gáro Hills District, and to invest him with the powers of a Magistrate of the 3rd class.

No. 188.—*The 12th June, 1889.*—Privilege leave of absence for three months under Section 74, Chapter V., of the Civil Leave Code, is granted to *Mr. A. J. Mein*, Deputy Conservator of Forests, Kámrúp, with effect from the 1st July, 1889, or the subsequent date on which he may avail himself of it.

No. 189.—*Mr. C. P. Fisher*, Assistant Conservator, is placed in charge of the Kámrúp Forest Division, in addition to his own duties, during the absence of *Mr. A. J. Mein.*

No 194.—*The 14th June, 1889.*—Privilege leave of absence for

three months, under Article 291, Chapter XII., of the Civil Service Regulations, is granted to *Mr. D. P. Copeland*, Officiating Deputy Conservator of Forests, Goálpára Division, with effect from the 1st of July, 1889, or any subsequent date on which he may avail himself of it.

No. 195.—*Mr. T. J. Campbell*, Assistant Conservator of Forests, Gáro Hills Division, is placed in charge of the Goálpára Division during the absence of *Mr. D. P. Copeland*, on privilege leave, in addition to his own duties.

No. 196.—*Mr. A. J. Mein*, Deputy Conservator of Forests, Kámrúp Division, is, on return from the privilege leave granted in Notification No. 188, dated the 12th June, 1889, transferred to the Goálpára Division.

No. 197.—*Mr. D. P. Copeland*, Officiating Deputy Conservator of Forests, Goálpára Division, is, on return from privilege leave granted in Notification No. 194, dated 14th June, 1889, transferred to the Kámrúp Division.

No. 231.—*The 3rd July, 1889.*—*Mr. C. P. Fisher*, Assistant Conservator of Forests, 3rd grade, is promoted to the 2nd grade of Assistant Conservators, with effect from the 6th May, 1889.

No. 241.—*The 12th July, 1889.*—*Mr. A. J. Mein*, Deputy Conservator of Forests, made over charge of the Kámrúp Forest Division to *Mr. C. P. Fisher*, Assistant Conservator of Forests, on the forenoon of the 1st July, 1889, and availed himself on that date of the privilege leave granted him in Notification No. 188, dated the 12th June, 1889.

No. 242.—*Mr. D. P. Copeland*, Deputy Conservator of Forests, made over charge of the Goálpára Forest Division to *Mr. T. J. Campbell*, Assistant Conservator of Forests, on the forenoon of the 1st July, 1889, and availed himself on that date of the privilege leave granted him in Notification No. 194, dated the 14th June, 1889.

8.—CENTRAL PROVINCES GAZETTE—

No. 3327.—*The 29th May, 1889.*—With reference to Notification No. 400, dated the 21st January, 1889, *Mr. A. W. Blunt*, Assistant Conservator of Forests, was attached to the Direction Division from the forenoon of the 3rd to the afternoon of the 17th January, 1889.

No. 3328.—*Mr. A. W. Blunt*, Assistant Conservator of Forests, is posted to the Chanda District, which he joined on the forenoon of the 26th January, 1889.

No. 3329.—*Mr. A. W. Blunt*, Assistant Conservator of Forests, is re-transferred from the Chanda District and attached to the Direction Division.

No. 3330.—*Mr. Blunt* relinquished charge of his duties in the Chanda District on the afternoon of the 20th April, 1889, and joined the Direction Division on the forenoon of the 22nd idem.

No. 3331.—*Mr. C. B. Anthony*, Officiating Probationary Sub-Assistant Conservator of Forests, of the Hoshangabad District, is granted two months' leave without pay from the forenoon of the 5th May, 1889.

No. 4028.—*The 4th July, 1889.*—*Mr. A. E. Lowrie*, Assistant Conservator of Forests, is transferred from the Nimar to the Chanda Division.

No. 4029.—*Mr. G. H. Foster*, Deputy Conservator of Forests, on being relieved by *Mr. Lowrie*, is transferred to the Nimar Division.

No. 4119.—*8th July, 1889.*—Privilege leave for three months, under Article 291 of the Civil Service Regulations, is granted to *Mr. A. F. Gradon*, Assistant Conservator of Forests, Bhandara, with effect from the 27th instant, or the subsequent date on which he may avail himself of it.

No. 4120.—*Mr. A. W. Blunt*, Assistant Conservator of Forests, attached to the Direction Division, is temporarily transferred to Bhandara.

No. 4121.—Privilege leave for three months, under Article 291 of the Civil Service Regulations, is granted to *Mr. H. Moore*, Officiating Deputy Conservator of Forests, Chhindwara, with effect from the 10th instant, or the subsequent date on which he may avail himself of it.

No. 4122.—*Mr. E. Dobbs*, M.A., LL.D., Deputy Conservater of Forests, Seoni, is placed temporarily in charge of the Chhindwara forests, in addition to his own duties.

9.—BURMA GAZETTE—

No. 69.—*The 11th May, 1889.*—The Chief Commissioner is pleased to direct that, with effect from the 1st June, 1889, the Prome Forest Division shall be divided into two Divisions to be called respectively the Prome Forest Division and the Thayetmyo Forest Division.

The local limits of the Thayetmyo Forest Division shall be those of the Thayetmyo District. The local limits of the Prome Forest Division shall be the local limits of that Division as heretofore constituted, exclusive of the Thayetmyo District.

No. 70.—With effect from the 1st June, 1889, the following transfers are ordered:—

Mr. F. W. Thellusson, Deputy Conservator of Forests, from Prome to the charge of the Thayetmyo Forest Division.

Mr. H. Jackson, Deputy Conservator of Forests, from Allanmyo to the charge of the Prome Forest Division.

No. 173.—*The 13th June, 1889.*—At the departmental examinations held at out-stations on the 3rd and 4th June, 1889, the undermentioned candidates passed the examinations in Burmese by the standards specified:—

Mr. C. E. Muriel, Assistant Conservator of Forests, by the Higher Standard.

No. 86.—*The 24th June, 1889.*—The following promotions are ordered, with effect from the 3rd June, 1889:—

Mr. C. E. Muriel, Assistant Conservator of Forests, 2nd grade, to be Deputy Conservator, 4th grade.

Mr. G. Q. Corbett, Assistant Conservator of Forests, 2nd grade, to be Assistant Conservator, 1st grade, and to officiate as Deputy Conservator, 4th grade.

No. 6.—*The 24th June, 1889.*—In this Department Notification No. 5, dated the 16th May, 1889, *after* "*Mr. D. L. K. Calderwood*" *add* "Sub-Assistant Conservator of Forests, on probation."

No. 8.—*The 1st July, 1889.*—*Mr. C. H. Hobart-Hampden*, Deputy Conservator of Forests, made over, and *Mr. G. Q. Corbett*, Officiating Deputy Conservator of Forests, received, charge of the Shwegyin Division on the afternoon of the 29th June, 1889.

No. 187.—*The 4th July, 1889.*—At the departmental examination held on the 3rd and 4th June, 1889, the following officers passed the Forest Department examination in Law and Revenue:—

Mr. C. L. Toussaint, Assistant Conservator.
Mr. H. Carter, Assistant Conservator.
Mr. F. W. L. Tottenham, Assistant Conservator.

10.—MYSORE GAZETTE—

No. 34.—*The 14th May, 1889.*—*Mr. B. Srinivasa Rao*, Forest Probationer, Tumkur District, is promoted to the grade of Sub-Assistant Conservator of Forests from 1st April, 1889.

No. 40.—*Mr. L. Ricketts*, Inspector-General of Police and Forests and Plantations, is granted privilege leave for one month in extension of that sanctioned in Notification No. 31, dated the 5th April, 1889.

No. 1143-127.—*The 17th May, 1889.*—*Mr. C. E. M. Russell*, Superintendent of Forests, delivered over, and *Mr. C. Narayin Rao*, Assistant Conservator, received charge of the Mysore District Forest Office at noon on the 24th April, 1889.

Mr. S. A. Bapu Rao, Sub-Assistant Conservator of Forests, assumed charge of the Forest Office, Bangalore District, on the 25th April, 1889.

No. 1144-128.—*Mr. Muddappa*, Sub-Assistant Conservator of Forests, Hassan, is granted three weeks' privilege leave of absence from the 6th May, 1889, or from such other date as he may avail himself of the same.

No. 75.—*The 20th June, 1889.*—*Mr. L. Ricketts* assumed charge of the offices of Inspector-General of Police, Forests and Director of Statistics and Agriculture on the forenoon of the 8th June, 1889.

No. 81.—*Mr. Muddappa*, Sub-Assistant Conservator of Forests, Hassan District, who availed himself from the 15th May, 1889, of the three weeks' privilege leave granted in Notification No. 1144—128 of the 17th May, 1889, having returned to duty on the 25th idem, the unexpired portion of the leave, *viz.*, 11 days, is hereby cancelled.

No. 78.—*The 21st June, 1889.*—*Mr. Srinivasa Rao*, Sub-Assistant Conservator of Forests, Tumkur District, having returned to duty on the 25th April last, the unexpired portion, *viz.*, 2 days out of the leave granted in Notification No. 71 of the 11th June, 1889, is hereby cancelled.

No. 82.—*The 24th June, 1889.*—*Mr. C. E. M. Russell*, Superintendent of Forests and Government Farms, is granted privilege leave of absence for fifteen days in continuation of the Examination leave granted him in letter No. 251—3, dated 15th April, 1889.

IV. EXTRACTS FROM OFFICIAL GAZETTES.

1.—GAZETTE OF INDIA—

No. 751.—*The 19th July, 1889.*—*Mr. B. Ribbentrop,* Inspector-General of Forests to the Government of India, is granted furlough for nineteen months, together with the usual subsidiary leave, with effect from the 7th August, 1889, or the subsequent date on which he may avail himself of it.

No. 895.—*The 22nd August, 1889.*—With reference to the Notifications of this Department No. 382F., dated 3rd May last, and No. 666F., dated 5th ultimo, *Mr. C. F. Elliott,* Officiating Deputy Conservator of Forests, 1st grade, Punjab, reverted to his substantive appointment of Deputy Conservator, 2nd grade, on 10th August, 1889, in consequence of the return from privilege leave of *Mr. H. H. Davis,* Deputy Conservator, 1st grade, Bengal.

No. 909.—*The 30th August, 1889.*—The following temporary promotions are made during the absence on privilege leave for two months and thirteen days of *Lieutenant-Colonel F. Bailey,* R.E., Officiating Conservator of Forests, 1st grade, School Circle, North-Western Provinces and Oudh, and Director of the Forest School, with effect from 10th June, 1889, and until further orders :—

Mr. G. Mann, Conservator, 2nd grade, Assam,—to officiate in the 1st grade.

Mr. C. Bagshawe, Conservator, 3rd grade, Central Circle, North-Western Provinces and Oudh,—to officiate in the 2nd grade.

Mr. E. McA. Moir, Officiating Deputy Conservator, 2nd grade, North-Western Provinces and Oudh,—to officiate in the 3rd grade of Conservators and to hold charge of the School Circle in addition to his own duties.

Mr. E. E. Fernandez, Deputy Director of the Forest School,—to officiate as Director in addition to his own duties.

No. 913.—The following reversions will take effect from 23rd August, 1889, consequent on the return to duty from privilege leave of *Lieutenant-Colonel F. Bailey,* R.E., Officiating Conservator of Forests, 1st grade, School Circle, North-Western Provinces and Oudh, and Director of the Forest School at Dehra Dún :—

Mr. G. Mann, Officiating Conservator, 1st grade, Assam,—to Conservator, 2nd grade.

Mr. E. McA. Moir, Officiating Conservator, 3rd grade, School Circle,—to Officiating Deputy Conservator, 2nd grade, North-Western Provinces and Oudh.

Mr. E. E. Fernandez, Officiating Director of the Forest School,—to Deputy Director of the Forest School.

No. 917.—The following temporary promotions will take effect from 24th August, 1889, and until further orders, consequent on the departure on furlough on medical certificate for three months of *Lieutenant-Colonel F. Bailey*, R.E., Officiating Conservator of Forests, 1st grade, School Circle, North-Western Provinces and Oudh, and Director of the Forest School at Dehra Dún :—

Lieutenant-Colonel G. J. van Someren, M.G.L.I., Officiating Conservator, 1st grade,—to officiate as Conservator of the School Circle, and Director of the Forest School.

Mr. G. Mann, Conservator, 2nd grade, Assam,—to officiate in the 1st grade of Conservators.

2.—MADRAS GAZETTE—

The 20th July, 1889.—Mr. E. C. M. Mascarenhas, Ranger, 5th grade, on probation, from Chingleput to North Malabar Division.

The 25th July, 1889.—A. V. Chidambra Aiyar, Ranger, 5th grade, from South Arcot to Madura.

No. 394.—*The 26th July, 1889.*—The undermentioned Officer is granted furlough out of India:—

Colonel J. C. Doveton, Staff Corps, Conservator of Forests, Central Provinces (p.a.) for one year and 13 days, under Rule IX. of the Regulations of 1868.

No. 218.—*The 3rd August, 1889.—Mr. J. S. Battie*, District Forest Officer, Godavari, privilege leave for three months under Article 291 of the Civil Service Regulations.

No. 219.—*Mr. P. M. Lushington*, Assistant Conservator of Forests, to be District Forest Officer, Anantapur, but to act as District Forest Officer, Kurnool, during the absence of *Mr. G. Homfray*, on other duty.

No. 220.—*Mr. G. Homfray*, Assistant Conservator of Forests, to be District Forest Officer, Kurnool, but to act as District Forest Officer, Godavari, during the absence of *Mr. J. S. Battie*, on leave.

No. 221.—*M. R. Ry. V. Alwar Chetti Garu*, B.A., Sub-Assistant Conservator of Forests, to be District Forest Officer, Kistna.

No. 222.—*Mr. H. O'Neill*, Ranger, 1st grade, Madura, to act as District Forest Officer, North Arcot, during the absence of *Mr. T. Sheffield*, on other duty.

No. 224.—*The 2nd August, 1889.—Mr. T. Sheffield*, District Forest Officer, North Arcot, to act as District Forest Officer, Nilgiris.

No. 225.—*M. R. Ry. T. M. Nallasamy Naidu Garu*, Acting District Forest Officer, Nilgiris, to act as District Forest Officer, Anantapur, during the absence of *Mr. P. M. Lushington*, on other duty.

No. 151.—*The 7th June, 1889.—Mr. J. S. Battie*, District Forest Officer, Godavari, privilege leave for three months from or after 1st June, 1889, under Section 138 of the Civil Leave Code, 6th edition.

No. 154.—*Mr. H. Stafford*, Sub-Assistant Conservator of Forests, Godavari, to act as District Forest Officer, Godavari, during the absence of *Mr. J. S. Battie* on leave.

No. 234.—*The 9th August, 1889.*—*Mr. H. T. D. Sweet,* Assistant Conservator of Forests, Madras, has been granted by the Right Honorable the Secretary of State an extension of leave for six months on medical certificate.

The 17th August, 1889.—Of the officers who appeared on the 17th July last for the Departmental Test prescribed in para. 56 of the Madras Forest Code, the following have passed :—

N. Arumuga Mudaliar, Ranger, 2nd grade (*a* to *e*) Code, Act and Rules, and Forestry.

P. Surappaiyer, Ranger, 5th grade on probation (*a.* & *b*) Code, Act and Rules.

Mr. E. C. M. Mascarenhas, Ranger, 5th grade on probation (*a.* & *b.*) Code, Act and Rules.

M. K. Pathani Velan, Forester, acting 2nd grade, (*a.* to *e.*) Code, Act and Rules, and Forestry.

T. M. Sundram Pillai, 2nd Clerk, District Forest Office, South Coimbatore, (*a.* to *e.*) Code, Act and Rules, and Forestry.

The 15th August, 1889.—The following *acting* promotions are ordered in the Subordinate Establishment of the Northern Circle, with effect from 15th August 1889 :—

To act as Forest Ranger, 5th grade.

L. Hanumanthulu, Forester, Bellary.

S. Arokiasawmy Pillai, Forester, Kurnool.

8.—Bombay Gazette—

The 10th July, 1889.—*Messrs. A. R. Maidment,* Sub-Assistant Conservator, and *Joseph Baptista,* L.C.E., acting Sub-Assistant Conservator, respectively delivered over and received charge of the South Sub-division Forest Office of North Thána on the 2nd July, 1889, before office hours.

The 11th July, 1889.—*Messrs. Joseph Baptista,* L.C.E., acting Sub-Assistant Conservator, and *A. R. Maidment,* Sub-Assistant Conservator of Forests, respectively delivered over and received charge of the North Sub-division Forest Office, North Thána, on the 2nd July, 1889, before office hours.

The 13th July, 1889.—*Mr. A. Stewart,* Deputy Conservator of Forests, 4th grade, who was temporarily attached as Assistant to the Divisional Forest Officer, Poona, proceeded on three months' privilege leave on the 8th July, 1889, after office hours.

No. 5347.—*The 26th July, 1889.*—His Excellency the Governor in Council is pleased to confer upon *Mr. Tuljárám Nihálchand,* Sub-Assistant Conservator of Forests and Divisional Forest Officer, Sukkur Division, the powers mentioned in Section 67 of the Indian Forest Act, No. VII. of 1878.

No. 5464.—*The 30th July, 1889.*—His Excellency the Governor in Council is pleased to make the following appointments:—

Mr. R. H. Mádan, L.C.E., to be 2nd grade Sub-Assistant Conservator of Forests, vice *Ganesh Krishna Shahane,* dismissed.

Mr. Tuljárám Nihálchand, substantive *pro tem.* Sub-Assistant Conservator, 3rd grade, to be Sub-Assistant Conservator, 3rd grade, vice *Mr. Mádan.*

Mr. J. H. Clabby, to be Sub-Assistant Conservator, 3rd grade substantive *pro tem.*, vice *Mr. Tuljárám Nihálchand.*

Mr. Nánábhái Dádábhái Sátárávála, L.C.E., to be Sub-Assistant Conservator, 3rd grade, substantive *pro tem.*, vice *Mr. A. R. Maidment*, transferred.

The 2nd August, 1889.—Messrs A. R. Maidment, Sub-Assistant Conservator, and *Joseph Baptista*, L.C.E., acting Sub-Assistant Conservator, respectively delivered over and received charge of the North Sub-Division Forest Office, North Thána, on the 20th July, 1889, after office hours.

The 10th June, 1889.—Mr. Haripad Mitra, Sub-Assistant Conservator of Forests, reported himself for duty on the 8th instant, before office hours.

4.—CALCUTTA GAZETTE—

The 23rd July, 1889.—Mr. E. J. N. James, Probationer, on return from the Forest School at Dehra Dún, is posted to the Darjeeling Sub-Division for duty, and is appointed to be a Sub-Assistant Conservator of Forests, 3rd grade, with effect from the 2nd July, 1889.

The 2nd August, 1889.—Mr. A. R. Grant, Deputy Conservator of Forests, has been permitted to retire from the service with effect from the 11th August, 1889.

Mr. C. G. Rogers, Officiating Assistant Conservator of Forests, 1st grade, is confirmed in that grade with effect from the 11th August, 1889, to fill an existing vacancy.

The 13th August, 1889.—Mr. H. H. Davis, Deputy Conservator of Forests, on return from leave, is posted to the charge of the Darjeeling Forest Division and of the Teesta Sub-Division of that Division.

The 16th August, 1889.—Mr. E. E. Wylly, Sub-Assistant Conservator of Forests, made over charge of the Teesta Sub-Division of the Darjeeling Forest Division to *Mr. F. B. Manson*, Deputy Conservator of Forests, in charge of the Working Plans and Darjeeling Forest Divisions, on the afternoon of the 25th July, 1889, and is attached to the Sunderbuns Forest Division, which he joined on the 1st August, 1889.

The 16th August, 1889.—In continuation of the Notification, dated the 6th November, 1888, *Mr. C. A. G. Lillingston*, Deputy Conservator of Forests, is granted a further extension of extraordinary leave for one month and one day, with effect from the 26th December, 1888, to the 26th January, 1889, both days inclusive, in extension of the special leave granted to him in the Notification, dated the 10th March, 1888.

The 24th August, 1889.—The following reversions are ordered with effect from the 11th August, 1889, consequent on the expiry of the three months' privilege leave availed of by *Mr. H. H. Davis*, Deputy Conservator of Forests, from the 11th May, 1889 (*vide* Notification dated the 28th idem) :—

Mr. G. A. Richardson, Deputy Conservator of Forests, to the 3rd grade of Deputy Conservators.

Mr. C. A. G. Lillingston, Deputy Conservator of Forests, to the 4th grade of Deputy Conservators.

Mr. C. G. Rogers, Officiating Deputy Conservator of Forests, to Officiating Assistant Conservator, 1st grade.

5.—ASSAM GAZETTE—

No. 251.—*The 24th July, 1889.—Mr. T. J. Campbell*, Officiating Assistant Conservator of Forests, 1st grade, is confirmed in that grade, with effect from the 7th May, 1888.

6.—NORTH-WESTERN PROVINCES AND OUDH GAZETTE—

No. $\frac{2831}{\text{II-845A-3.}}$.—*The 2nd July, 1889.—Lieutenant-Colonel F. Bailey*, R.E., Conservator of Forests, School Circle, North-Western Provinces and Oudh, privilege leave for two months and 13 days, with effect from the 10th June, 1889.

No. $\frac{482}{\text{VII-191-B}}$.—*The 13th July, 1889.*—The Hon'ble the Lieutenant-Governor and Chief Commissioner is pleased to declare the undermentioned Forest Officer to have passed in Forest Law by the Higher Standard :—

Mr. M. Hill, Assistant Conservator of Forests, Kheri Division.

7.—PUNJAB GAZETTE—

No. 267.—*The 16th July, 1889.—Mr. A. V. Monro*, Assistant Conservator of Forests, Punjab, passed by the Lower Standard the prescribed Departmental Examination in Hindustáni, held at Mooltan on the 29th June, 1889.

No. 279.—*The 24th July, 1889.—Mr. W. Shakespear*, Deputy Conservator of Forests, Lahore, has qualified in the tests in the Punjábi language prescribed in Bengal Army Regulations, Section 24, paragraphs 19 and 24, as re-constructed by G. O. No. 79 of 1884.

No. 296.—*The 12th August, 1889.—Babu Fazl Dín*, Sub-Assistant Conservator of Forests, reported his return from the privilege leave granted to him in *Punjab Government Gazette* Notification No. 203, dated 1st May, 1889, on the forenoon of the 19th of July, 1889.

8.—CENTRAL PROVINCES GAZETTE—

No. 4345.—*The 18th July, 1889.*—The six months' leave on medical certificate granted to *Mr. F. S. Barker*, Officiating Deputy Conservator of Forests, from the 18th July, 1888, to the 17th January, 1889, is, under Article 264 of the Civil Service Regulations, commuted to special leave for that period.

No. 4346.—Privilege leave for three months, under Article 291 of the Civil Service Regulations, is granted to *Mr. F. S. Barker*, Officiating Deputy Conservator of Forests, Sambalpur, with effect from the 1st instant, or the subsequent date on which he may avail himself of it.

No. 4637.—*The 31st July, 1889.—Mr. M. Muttannah,* Officiating Assistant Conservator of Forests, attached to the Narsinghpur District, received charge of the duties of District Forest Officer of that District from *Mr. W. P. Thomas,* Deputy Conservator of Forests, on the afternoon of the 10th instant.

No. 4667.—*The 1st August, 1889.—Mr. A. E. Lowrie,* Assistant Conservator of Forests, Nimar, transferred to the Chanda District by Notification No. 4028, dated the 4th July, 1889, made over charge of his duties as District Forest Officer to the Deputy Commissioner, Nimar, on the forenoon of the 16th idem.

Mr. G. H. Foster, Deputy Conservator of Forests, and *Mr. A. E. Lowrie,* Assistant Conservator of Forests, respectively, made over and received charge of the office of District Forest Officer, Chanda, on the afternoon of the 18th July, 1889.

No. 4668.—With reference to Notification No. 4029, dated the 4th July. 1889, *Mr. G. H. Foster,* Deputy Conservator of Forests, received charge of the duties of District Forest Officer, Nimar, from the Deputy Commissioner of that District, on the afternoon of the 23rd idem.

No. 4748.—*The 6th August, 1889.—Mr. J. J. Hobday,* Sub-Assistant Conservator of Forests, is transferred from Chanda to the Sambalpur District.

Mr. Hobday relinquished charge of his duties in the Chanda District on the afternoon of the 18th June, and reported his arrival at Sambalpur on the 13th July, 1889.

No. 4869.—*The 12th August, 1889.—Mr. Chunder Kumar Chatterji,* Sub-Assistant Conservator of Forests, transferred to Damoh by Notification No. 2734 of the 30th April, 1889, assumed charge of the office of District Forest Officer of that District on the forenoon of the 13th June, 1889.

No. 4870.—*Mr. A. F. Gradon,* Assistant Conservator of Forests, Bhandara, availed himself, on the afternoon of the 3rd instant, of the three months' privilege leave granted him by Notification No. 4119 of the 8th July, 1889, making over charge of his duties to *Mr. A. W. Blunt,* Assistant Conservator of Forests.

No. 4880.—*The 13th August, 1889.—Mr. F. S. Barker,* Officiating Deputy Conservator of Forests, Sambalpur, availed himself, on the afternoon of the 26th July, 1889, of the three months' privilege leave granted him by Notification No. 4346 of the 18th idem, making over charge of his duties to *Mr. J. J. Hobday,* Sub-Assistant Conservator of Forests.

9.—BURMA GAZETTE—

No. 90.—*The 9th July, 1889.*—Consequent upon the deputation of *Mr. H. C. Hill,* Conservator of Forests, Upper Burma Circle, to officiate as Inspector-General of Forests to the Government of India, the following transfers are ordered with the sanction of the Government of India:—

Mr. J. W. Oliver, Officiating Conservator of Forests, from Moulmein, to the charge of the Upper Burma Circle.

Major C. T. Bingham, Deputy Conservator of Forests, Rangoon Division, to the charge of the Tenasserim Circle.

No. 91.—*Mr. H. A. Hoghton*, Deputy Conservator of Forests, in charge of the Working Plans Division, is appointed to the charge of the Rangoon Forest Division, in addition to his other duties, with effect from the date on which he relieved *Major C. T. Bingham.*

No. 104.—*The 25th July, 1889.—Mr. H. C. Hill*, Conservator of Forests, made over charge of the Upper Burma Circle, to *Mr. J. W. Oliver*, Officiating Conservator, on the 13th July, 1889, after noon.

No. 105.—In exercise of the power conferred by section 3 of the Burma Boundaries Act, 1880, the Chief Commissioner directs that the boundaries of all lands situated within the Yandoon township, Thôngwa district, shall be demarcated by a Demarcation Officer.

No. 5.—*The 16th May, 1889.*—With reference to Forest Department Notification No. 23, dated the 20th March, 1888, *Mr. D. L. K. Calderwood* reported his arrival in Mandalay on the 9th May, 1889, in the forenoon, and was attached to the Mandalay Division.

No. 5.—*The 3rd June, 1889.—Mr. G. Q. Corbett*, Assistant Conservator of Forests, made over, and *Mr. P. J. Carter*, Deputy Conservator of Forests, received, charge of the Tharrawaddy Division on the forenoon of the 1st instant.

No. 6.—*Mr. F. W. Thellusson*, Deputy Conservator of Forests, made over, and *Mr. H. Jackson*, Deputy Conservator of Forests, received, charge of the Prome Division on the afternoon of the 1st instant.

No. 7.—*Mr. F. W. Thellusson*, Deputy Conservator of Forests, assumed charge of the Thayetmyo Division on the afternoon of the 1st instant.

No. 166.—*The 6th June, 1889.*—At a departmental examination held on the 3rd and 4th June, 1889, at Rangoon, the following candidate passed the examination in Burmese by the standards specified in each case:—

Mr. G. Q. Corbett, Assistant Conservator of Forests.

10.—MYSORE GAZETTE—

The 6th August, 1889.—C. Srinivasa Rao, Head Record-keeper, office of the Inspector-General of Forests, is appointed Ranger, 4th grade, and posted to the Bangalore District.

No. 139.—*The 24th August, 1889.*—The 15 days' privilege leave granted to *Mr. C. E. M. Russell*, Superintendent of Forests, in Notification No. 82, dated 24th June, 1889, is cancelled.

III. Extracts from Official Gazettes.

1.—Gazette of India—

No. 935.—*The 5th September, 1889.*—The following temporary promotions are made during the absence on privilege leave for one month and twenty-one days of *Captain E. S. Wood*, Conservator of Forests, 1st grade, Oudh Circle, North-Western Provinces and Oudh, with effect from 15th July, 1889, and until further orders :—

Mr. C. J. Ponsonby, Deputy Conservator, 1st grade, North-Western Provinces and Oudh,—to officiate in the 3rd grade of Conservators and to hold charge of the Oudh Circle, in addition to his own duties.

Mr. W. G. Allan, Deputy Conservator, 2nd grade, North-Western Provinces and Oudh,—to officiate in the 1st grade of Deputy Conservators.

No. 954.—*The 6th September, 1889.*—The following temporary promotions and reversions are made consequent on the return to duty from furlough of *Lieutenant-Colonel G. J. van Someren*, M.G.L.I., Conservator of Forests, 2nd grade, and until further orders :—

Lieutenant-Colonel G. J. van Someren,—to officiate in the 1st grade of Conservators from 10th August, 1889, and to hold charge of the Berar Forest Circle from 10th to 12th August, 1889 (both dates inclusive).

Mr. E. P. Dansey, Officiating Conservator, 3rd grade, Berar,—reverted to his substantive appointment of Deputy Conservator, 3rd grade, North-Western Provinces and Oudh, from 10th to 12th August, 1889, (both dates inclusive), but remained on duty in Berar during that period, and resumed charge as Officiating Conservator, 3rd grade, of the Berar Forest Circle, from *Lieutenant-Colonel G. J. van Someren* on the afternoon of the latter date.

No. 809.—*The 7th September, 1889.*—The following promotion is made subject to Her Majesty's approval :—

Lieutenant-Colonel Godlieb James van Someren, Madras General List, Infantry, to be Colonel in the Army.

No. 964.—*The 12th September, 1889.*—The following temporary promotions are made during the absence on furlough of *Mr. B. Ribbentrop*, Inspector-General of Forests to the Government of India, with effect from the 7th August, 1889, and until further orders :—

Mr. H. C. Hill, Conservator, 2nd grade, Upper Burma,—to officiate as Inspector-General of Forests.

Mr. J. W. Oliver, Officiating Conservator, 3rd grade, Tenasserim Circle, Burma,—to hold charge of the Upper Burma Circle, *vice Mr. Hill.*

Major C. T. Bingham, R.S.C., Deputy Conservator, 1st grade, Burma,—to officiate in the 3rd grade of Conservators, and to hold charge of the Tenasserim Circle, *vice Mr. Oliver.*

Mr. P. J. Carter, Deputy Conservator, 2nd grade, Burma,—to officiate in the 1st grade of Deputy Conservators.

Mr. Oliver assumed charge of the Upper Burma Circle from *Mr. Hill* on the 14th July, 1889, and *Major Bingham* of the Tenasserim Circle from *Mr. Oliver* on the 7th idem.

No. 979.—*The 18th September, 1889.*—In the Notification of this Department, No. 895, dated the 22nd ultimo, directing the reversion of *Mr. C. F. Elliott*, Officiating Deputy Conservator of Forests, 1st grade, Punjab, to his substantive appointment of Deputy Conservator, 2nd grade, *for* "on 10th August, 1889," *read* "on 11th August, 1889."

No. 990.—*The 20th September, 1889.*—In the Notification of this Department, No. 964, dated the 12th instant, the date from which the temporary promotions of *Major C. T. Bingham*, B.S.C., and *Mr. P. J. Carter* were to take effect, was notified to be the 7th August, 1889. It is now notified that the date is the 7th July, 1889.

2.—MADRAS GAZETTE—

The 2nd September, 1889.—M. R. Ry. V. A. Parthasarathy Mudaliar, Manager, Conservator's Office, privilege leave for two months under Article 291 of the Civil Service Regulations.

M. R. Ry. A. V. Chidambara Aiyar, Ranger, 5th grade, is transferred from Madura to North Coimbatore Division.

The 14th September, 1889.—P. Surappier, Ranger, 5th grade, on probation, Salem, is confirmed in that grade.

3.—BOMBAY GAZETTE—

No. 5896.—*The 14th August, 1889.—Mr. F. Gleadow*, Deputy Conservator of Forests, 4th grade, has been allowed by Her Majesty's Secretary of State for India to return to duty within the period of his leave.

The 26th August, 1889.—Mr. R. S. Fagan, Divisional Forest Officer, West Khándesh, has been allowed privilege leave of absence for one month from such date after the 20th August, 1889, as he may avail himself of it, and *Mr. F. R. Desai*, Divisional Forest Officer, East Khándesh, has been directed to receive and retain charge of the Divisional Forest Office, East Khándesh, in addition to his own office, until the return of *Mr. Fagan* from leave, or until further orders.

No. 6290.—*The 27th August, 1889.—Mahomed Hossein*, Range Forest Officer, and *Deoji Pandoji* and *Rámchandra Pandoji*, Forest Guards, in the Shirpur Range of the West Khándesh Forest Division, having been dismissed from their respective offices on account of grave misconduct in the discharge of their official duties, are hereby declared incapable of serving Government again in any capacity.

No. 6302.—*Mr. T. R. D. Bell*, Assistant Conservator of Forests, 1st grade, is allowed privilege leave of absence for one month and fifteen days from the 1st September, 1889, or from such subsequent date as he may avail himself of it.

The 28th August, 1889.—Messrs. W. H. Lucas, C.S., Assistant Collector, and *F. R. Desai*, Deputy Conservator of Forests, 1st grade,

respectively delivered over and received charge of the Divisional Forest Office, West Khándesh, on the 24th August, 1889, at 7 P.M.

Messrs. R. S. Fagan, Deputy Conservator of Forests, 4th grade, and *W. H. Lucas*, C.S., Assistant Collector, respectively delivered over and received charge of the Divisional Forest Office, West Khándesh, on the 24th August, 1889, after office hours.

No. 6559.—*The 5th September, 1889.*—His Excellency the Governor in Council is pleased to appoint *Mr. Ganesh Sakharám Hinge* to be Sub-Assistant Conservator of Forests, 3rd grade, substantive *pro tem.*

Mr. C. Greatheed, Divisional Forest Officer of Sátára, has been allowed privilege leave of absence for one month from such date after the 12th September, 1889, as he may avail himself of it, and *Mr. R. H. Madan*, L.C.E., acting Assistant Conservator of Forests in charge of the North Sub-Division Office of the South Thána Division, has been directed to act as Divisional Forest Officer, Sátára, until the return of *Mr. Greatheed* from leave, or till further orders.

The 9th September, 1889.—Messrs. T. R. D. Bell, Assistant Conservator of Forests, and *N. D. Satarawalla*, Sub-Assistant, respectively delivered over and received charge of the Working Plans Divisional Forest Office No. I, Kánara, on the 5th instant, after noon.

No. 7012.—*The 18th September, 1889.—Mr. Shesho Manju*, Sub-Assistant Conservator of Forests, 3rd grade, is allowed privilege leave of absence for three months, with effect from 16th October, 1889, or such subsequent date as he may avail himself thereof.

No. 7074.—His Excellency the Governor in Council is pleased to appoint *Mr. A. C. Robinson*, L.C.E., to act as Sub-Assistant Conservator of Forests, 3rd grade, and to do duty in the Southern Circle.

The 23rd September, 1889.—Messrs. C. Greatheed, Deputy Conservator of Forests, 3rd grade, and *R. H. Madan*, L.C.E., Acting Assistant Conservator of Forests, 3rd grade, respectively delivered over and received charge of the Divisional Forest Office, Sátára, on the afternoon of the 11th September, 1889.

Messrs. R. H. Madan, L.C.E., Acting Assistant Conservator of Forests, 3rd grade, and *J. H. Clabby*, substantive *pro tem.* Sub-Assistant Conservator of Forests, 3rd grade, respectively, delivered over and received charge of the North Sub-Division Forest Office, South Thána, on the 9th September, 1889, after office hours.

The 26th September, 1889.—Mr. A. C. Robinson, L.C.E., who was appointed in Government Resolution No. 7074 of 19th instant to act as Sub-Assistant Conservator of Forests, 3rd grade, reported himself for duty on the afternoon of the 25th instant.

4.—CALCUTTA GAZETTE—

The 14th September, 1889.—Erratum.—For the 2nd August, 1889,

read the 2nd September, 1889, as the date of the Notification, published in the *Calcutta Gazette* of the 4th instant, permitting *Mr. A. R. Grant*, Deputy Conservator of Forests, to retire from the service with effect from the 11th August, 1889, and confirming *Mr. E. C. Rogers*, in the 1st grade of Assistant Conservators from the same date.

The 16th September, 1889.—Examination leave for one month, under the provisions of Section 57 of the Forest Department Code, is granted to *Messrs. H. D. D. French* and *H. H. Haines*, Assistant Conservators of Forests, with effect from the 11th October, 1889.

Mr. H. H. Davis, Deputy Conservator of Forests, Darjeeling Division, will hold charge of the Kurseong Sub-Division of that Division in addition to his other duties, during the absence of *Mr. French* on leave, or until further orders.

The 21st September, 1889.—The following transfers are ordered:—

Mr. D. D. French, Assistant Conservator of Forests, on the expiry of the Examination leave granted in the Notification, dated the 16th September, 1889, from the Kurseong Sub-Division of the Darjeeling Division to the charge of the Singbhoom Sub-Division of the Chota Nagpore Division.

Mr. H. H. Haines, Assistant Conservator of Forests, attached to the Working Plans Division, on expiry of the Examination leave granted in the Notification of the same date, to the charge of the Kurseong Sub-Division of the Darjeeling Division.

Mr. R. Quinnell, Sub-Assistant Conservator of Forests, on being relieved in the Singbhoom Sub-Division by *Mr. French*, to the charge of the Teesta Sub-Division of the Darjeeling Division.

The 23rd September, 1889.—Rules 2 and 3 of the Rules made by Government under Section 75 (*b*) of the Indian Forest Act VII. of 1878, regarding the grant of rewards to non-gazetted Government officers and others, and published under the Notification, dated the 23rd October, 1880, in Part I, page 960 of the *Calcutta Gazette* of the 3rd November following, are hereby cancelled by the Lieutenant-Governor, and in supersession thereof the following revised rule is approved and promulgated for general information:—

"The Magistrate or the Court imposing the fine is bound to inform the Divisional Forest Officer, or the Sub-Divisional Forest Officer not being below the rank of an Assistant Conservator of Forests, of the levy of the fine, and the whole or any part of the fine, when realized, may be distributed in such proportions as that officer may think fit among the persons instrumental in the detection of the offence, the seizure of the articles, or the capture of the offender. Besides the amount of the fine, the said persons shall also be entitled to share the whole or part of proceeds of the sale of the confiscated articles. The Forest Officer aforesaid may also, out of the fine realized, award compensation to any person subjected to annoyance or injury in connection with the proceedings in which the fine was imposed."

5.—NORTH-WESTERN PROVINCES AND OUDH GAZETTE—

No. $\frac{3897}{\text{II-845A-25}}$.—*The 13th September, 1889.—Lieutenant-Colonel*

F. Bailey, Conservator of Forests, School Circle, North-Western Provinces and Oudh, leave on medical certificate for three months, with effect from the 24th August, 1889.

No. $\frac{4072}{\text{II-861A-14}}$.—*The 30th September, 1889.*—In supersession of the Notification from this Department, No. $\frac{2369}{\text{II-861A-2}}$, dated 10th July, 1889, *Mr. A. Campbell*, Officiating Deputy Conservator of Forests, in charge of the Gorakhpur Division, privilege leave for fifteen days, with effect from the 1st October, 1889, or subsequent date.

6.—PUNJAB GAZETTE—

No. 301.—*The 20th August, 1889.*—The Hon'ble the Lieutenant-Governor is pleased to appoint *Mr. A. V. Monro*, Assistant Conservator of Forests, 3rd grade, to be an Assistant Conservator of Forests, 2nd grade, with effect from the 29th June, 1889.

No. 327.—*The 23rd September, 1889.*—In accordance with the provisions of Section 57 of the Forest Code, the Hon'ble the Lieutenant-Governor is pleased to grant three months' Examination leave to *Mr. A. V. Monro*, Assistant Conservator of Forests.

Mr. Monro availed himself of the leave, hereby sanctioned, with effect from the 25th of July, 1889.

7.—CENTRAL PROVINCES GAZETTE—

No. 5144.—*The 26th August, 1889.*—*Mr. M. Muttannah*, Officiating Assistant Conservator of Forests, Narsinghpur, is granted forty-five days' privilege leave, under Article 291 of the Civil Service Regulations, with effect from the date on which he may avail himself of it.

No. 5147.—*Mr. H. Moore*, Officiating Deputy Conservator of Forests, Chindwara, availed himself, on the forenoon of the 12th instant, of the three months' privilege leave granted him by Notification No. 4121, dated the 8th July, 1889, making over charge of his duties to *Mr. E. Dobbs*, M.A., LL.D., Deputy Conservator of Forests, Seoni.

No. 5477.—*The 13th September, 1889.*—*Mr. H. B. Anthony*, Assistant Conservator of Forests, Bilaspur, is appointed to the charge of the forests of the Raipur District, in addition to his own duties.

Mr. Anthony received charge of these forests from *Mr. R. H. E. Thompson*, Deputy Conservator of Forests, on the forenoon of the 26th August, 1889.

No. 5539.—*The 17th August, 1889.*—Consequent on the departure on three months' privilege leave of *Mr. H. Moore*, Officiating Deputy Conservator of Forests, the following officiating appointments are made, with effect from the 12th August, 1889 :—

Mr. H. B. Anthony, Assistant Conservator of Forests, 1st grade, sub. *pro tem.*, to officiate as Deputy Conservator of Forests, 4th grade.

Mr. A. E. Lowrie, Officiating Assistant Conservator of Forests, 1st grade, to be Assistant Conservator of Forests, 1st grade, sub *pro tem.*

Mr. A. A. Watson, Assistant Conservator of Forests, 2nd grade, to officiate as Assistant Conservator of Forests, 1st grade.

8.—BURMA GAZETTE—

No. 114.—*The 16th August, 1889.*—*Mr. G. F. R. Blackwell*, Assistant Conservator of Forests, is transferred from Kindat to the charge of the Yaw Division during the absence of *Mr. L. A. W. Rind*, on privilege leave, or until further orders.

No. 115.—Under the provisions of Article 291 of the Civil Service Regulations, privilege leave for six weeks is granted to *Mr. L. A. W. Rind*, Deputy Conservator of Forests, with effect from the 1st September, 1889, or the subsequent date on which he may avail himself of it.

No. 116.—*The 17th August, 1889.*—Under the provisions of Section 14 of the Upper Burma Forest Regulation, 1887, the Chief Commissioner appoints the following officers of the Revenue Department to hear appeals from orders passed by a Forest Settlement Officer under Sections 9, 10, 11, 12, or 13 under Chapter II. of the Regulation:—

The Commissioner of the Division when the Forest Settlement Officer appointed under Section 4 of the Regulation is a Deputy Commissioner;

The Deputy Commissioner of the district in other cases.

No. 117.—Under the provisions of section 353 (*b*) of the Civil Service Regulations, subsidiary leave for ten days, from the 31st January, 1888, was specially granted by the Chief Commissioner to *Mr. John Nisbet*, Deputy Conservator of Forests, on his return from the furlough granted to him in this Department Notification No. 66, dated the 11th December, 1885.

No. 118.—The Chief Commissioner appoints *Mr. J. C. Murray*, Deputy Conservator of Forests, Mu Division, to be the Forest Officer to assist the Forest Settlement Officer in the enquiry referred to in this Department Notification No. 88, dated the 3rd July, 1889.

No. 119.—*The 21st August, 1889.*—Under the provisions of Section 70 of the Burma Forest Act, 1881, the Chief Commissioner, as a special case, invests *Mr. L. D. Rozario*, Forest Ranger, 1st grade, Salween Division, with the following powers, that is to say:—

(i), the powers of a Civil Court to compel the attendance of witnesses and the production of documents;

(ii), power to issue search-warrants under the Code of Criminal Procedure;

(iii), power to hold enquiries into forest offences and, in the course of such enquiries, to receive and record evidence.

9.—MYSORE GAZETTE—

No. 205.—*The 25th September, 1889.*—*Mr. C. E. M. Russell* returned from his Examination leave and assumed charge of the office of the Superintendent of Forests, Bangalore District, on the forenoon of the 26th August, 1889.

11.—ASSAM GAZETTE—

Nil.

VI. Extracts from Official Gazettes.

1.—Gazette of India—

No. 990.—*The 20th September, 1889.*—In the Notification of this Department, No. 964F., dated the 12th instant, the date from which the temporary promotions of *Major C. T. Bingham*, B.S.C., and *Mr. P. J. Carter*, were to take effect, was notified to be the 7th August, 1889. It is now notified that the date is the 7th July, 1889.

No. 992.—The following reversions took effect from 5th September, 1889, consequent on the return from privilege leave of *Captain E. S. Wood*, Conservator of Forests, 1st grade, Oudh Circle, North Western Provinces and Oudh.

Mr. C. J. Ponsonby, Officiating Conservator, 3rd grade, Oudh Circle, to Deputy Conservator, 1st grade, North-Western Provinces and Oudh.

Mr. W. G. Allan, Officiating Deputy Conservator, 1st grade, North-Western Provinces and Oudh, to Deputy Conservator, 2nd grade.

No. 994.—The following temporary promotions are made during the absence on furlough of *Colonel J. C. Doveton*, M.S.C., Conservator of Forests, 1st grade, Central Provinces, with effect from 2nd September, 1889, and until further orders:—

Mr. R. H. E. Thompson, Deputy Conservator, 1st grade, Central Provinces, to officiate in the 3rd grade of Conservators, and to hold charge of the Forest Department in the Central Provinces *vice Colonel Doveton.*

Mr. C. F. Elliott, Deputy Conservator, 2nd grade, Punjab, to officiate in the 1st grade of Deputy Conservators, *vice Mr. Thompson.*

No. 997.—In the Notification of this Department, No. 109F., dated the 30th ultimo, making certain temporary promotions during *Lieutenant-Colonel F. Bailey's* absence on privilege leave, *for* "with effect from 10th June, 1889, and until further orders", *read* "with effect from 12th June, 1889, and until further orders".

No. 1023.—*The 27th September, 1889.*—The following transfer is made in the interests of the public service:—

Mr. Hira Singh, Sub-Assistant Conservator of Forests, Punjab, to Ajmere.

No. 1153.—*The 18th October, 1889.*—With reference to the Notification of this Department, No. 326F., dated the 29th March, 1889, the services of *Mr. S. Hornidge*, of the Bombay Forest Department, are replaced at the disposal of the Government of Bombay.

No. 1156.—With reference to the Notification of the Government

BENGAL SECRETARIA LIBRARY.

of Bombay, No. 7452, dated the 3rd October, 1889, *Mr. A. Stewart*, Deputy Conservator of Forests, 4th grade, Bombay Presidency, is transferred to the Central Provinces.

No. 1167.—*The 31st October, 1889.*—The following transfers are made in the interests of the public service:—

Mr. F. B. Dickinson, Officiating Deputy Conservator of Forests, 2nd grade, Coorg, to the Central Provinces.

Mr. J. McKee, Officiating Deputy Conservator, 2nd grade, Central Provinces, to Coorg, as Chief Forest Officer.

No. 11.—*The 29th November, 1889.*—The following promotions are made with effect from 28th October, 1889, and until further orders:—

Mr. R. H. C. Whittall, Deputy Conservator of Forests, 2nd grade, Central Provinces, and Officiating Conservator, 3rd grade, Punjab, is confirmed in the latter grade, and is appointed to officiate in the 2nd grade of Conservators.

Mr. F. B. Dickinson, Deputy Conservator, 3rd (officiating 2nd) grade, Central Provinces, is appointed to officiate in the 3rd grade of Conservators and to hold charge of the Northern Forest Circle in the Central Provinces. *Mr. R. H. E. Thompson*, Officiating Conservator, 3rd grade, continuing to hold charge of the Southern Circle.

No. 14.—*Mr. M. Muttannah*, Sub-Assistant Conservator of Forests, Officiating Assistant Conservator of Forests of the 3rd grade, Central Provinces, is confirmed in that grade, with effect from the 31st October, 1889.

No. 16.—*Mr. W. H. Reynolds*, Deputy Conservator, 2nd (officiating 1st) grade, Punjab, and Superintendent of Forest Surveys, is granted seven months' furlough under Article 340 of the 3rd January, 1890, or any subsequent date on which he may avail himself of the leave.

Mr. E. F. Litchfield, Deputy Conservator, 4th (officiating 3rd) grade, North-Western Provinces and Oudh, attached to the Imperial Forest Survey Branch, is appointed to officiate as Superintendent of Forest Surveys during *Mr. Reynolds'* absence on furlough, or until further orders.

No. 26.—*The 20th December, 1889.*—Consequent on the return to duty from sick leave of *Lieutenant-Colonel F. Bailey*, R.E., Conservator of Forests, 2nd grade, the following appointments and reversions are made, with effect from 24th November, 1889, and until further orders:—

Lieutenant-Colonel Bailey to officiate in the 1st grade of Conservators, and to resume charge of the School Circle in the North-Western Provinces and Oudh and of the Forest School at Dehra Dún from *Colonel G. J. van Someren*, M.G.L.I., Conservator of the 2nd (officiating 1st) grade.

Colonel van Someren to receive charge, as a temporary measure, of the Northern Circle in the Central Provinces, from *Mr. F. B. Dickenson*, Officiating Conservator, 3rd grade.

Mr. Dickenson to revert to Officiating Deputy Conservator, 2nd grade, Central Provinces.

Mr. G. Mann, Conservator of the 2nd (officiating 1st) grade,

Assam, to revert to his substantive appointment in the 2nd grade.

Mr. R. H. C. Whittall, Conservator of the 3rd (officiating 2nd) grade, Punjab, to revert to his substantive appointment in the 3rd grade.

No. 33.—With reference to the Notification of this Department, No. 259F., dated 15th March, 1889, the services of *Mr. F. S. Barker*, Deputy Conservator of Forests, 4th grade, are placed permanently at the disposal of the Chief Commissioner of the Central Provinces.

2.—MADRAS GAZETTE—

The 17th October, 1889.—The following transfers are ordered in the Northern Circle:—

N. S. Veeracharlu, Forest Ranger, Cuddapah District, to the Kurnool District.

Mr. E. E. Leipenstein, Acting Forest Ranger, Kurnool District, to the Cuddapah District.

The 19th October, 1889.—To *Mr. S. C. Moss*, Sub-Assistant Conservator of Forests, 2nd grade, South Coimbatore Division, under article 291 of the Civil Service Regulations, privilege leave for two months from 1st December, 1889.

To *M. R. Ry. V. S. Gurunadha Pillai*, Sub-Assistant Conservator, 2nd grade, North Coimbatore Division under Article 291 of the Civil Service Regulations, privilege leave for one month from 20th November, 1889.

The 25th October, 1889.—To *Mr. P. Surappier*, Ranger, Salem District, under article 372 of the Civil Service Regulations, leave without allowances for one month from date of relief.

The 8th November, 1889.—*Mr. McCay*, Forest Ranger, 5th grade, Muchukota Range, Anantapur District, is granted leave on medical certificate for three months with effect from 2nd November, 1889.

During his absence, *M. Balaji Sing*, Forester, 5th grade, Gooty Range, will act as Forest Ranger, 5th grade.

The 16th November, 1889.—To *Mr. S. Solomon*, Acting Ranger, 5th grade, North Coimbatore Division, under article 291 of the Civil Service Regulations, privilege leave for two weeks.

To *M. L. Narayana Sastri*, Ranger, 5th grade (on probation), under article 291 of the Civil Service Regulations, privilege leave for 45 days from 9th March, 1889.

To *Mr. G. R. Middleton*, Ranger, 4th grade, South Arcot District, under article 369 of the Civil Service Regulations, leave on medical certificate for three months from 17th October, 1889.

No. 324.—*The 11th November, 1889.*—*Mr. F. D'A. Vincent*, Deputy Conservator of Forests, Madras, has been granted by the Right Honorable the Secretary of State an extension of leave on medical certificate for 4 months.

To *C. M. Maduranayagam Pillai*, Ranger, 3rd grade, Trichinopoly District, privilege leave for one month from 1st November, 1889, under Article 291 of the Civil Service Regulations.

No. 331.—*The 16th November, 1889.*—*Mr. A. W. C. Stanbrough*, Deputy Conservator of Forests, 4th grade, to be District Forest Officer, South Arcot.

No. 351.—*The 2nd December, 1889.*—*Mr. A. W. Peet*, Deputy Conservator, 2nd grade, and Acting Conservator, 2nd grade, is promoted to Deputy Conservator, 1st grade, with effect from 28th February, 1889.

Mr. E. D. M. Hooper, Deputy Conservator, 3rd grade, and Acting Deputy Conservator, 2nd grade, is promoted to Deputy Conservator, 2nd grade, with effect from 28th February, 1889.

Mr. G. Hadfield, Deputy Conservator, 4th grade, and Acting Deputy Conservator, 3rd grade, is promoted to Deputy Conservator, 3rd grade, with effect from 28th February, 1889.

Mr. T. Sheffield, Assistant Conservator, 1st grade, and Acting Deputy Conservator, 4th grade, is promoted to Deputy Conservator, 4th grade, with effect from 28th February, 1889.

Mr. T. P. Peake, Assistant Conservator, 2nd grade, and Acting Assistant Conservator, 1st grade, is promoted to Assistant Conservator, 1st grade, with effect from 28th February, 1889.

Mr. E. D. M. Hooper, Deputy Conservator, 2nd grade, to be Deputy Conservator, 1st grade, with effect from 28th February, 1889.

Mr. H. A. Gass, Deputy Conservator, 3rd grade, to be Deputy Conservator, 2nd grade, with effect from 28th February, 1889.

Mr. C. E. Brasier, Acting Deputy Conservator, 4th grade, to be Deputy Conservator, 3rd grade, with effect from 28th February, 1889.

Mr. J. S. Battie, Assistant Conservator, 1st grade, to be Deputy Conservator, 4th grade, with effect from 28th February, 1889.

Mr. R. W. Morgan, Acting Deputy Conservator, 2nd grade, to be Deputy Conservator, 1st grade, with effect from 8th March, 1889.

Mr. G. Hadfield, Deputy Conservator, 3rd grade, to be Deputy Conservator, 2nd grade, with effect from 8th March, 1889.

Mr. G. Homfray, Acting Deputy Conservator, 4th grade, to be Deputy Conservator, 3rd grade, with effect from 8th March, 1889.

Mr. T. P. Peake, Assistant Conservator, 1st grade, to be Deputy Conservator, 4th grade, with effect from 8th March, 1889.

Mr. C. G. Douglas, Deputy Conservator, 2nd grade, and Acting Deputy Conservator, 1st grade, to be Deputy Conservator, 1st grade, with effect from 8th August, 1889.

Mr. R. W. Morgan, Deputy Conservator, 3rd grade, and Acting Deputy Conservator, 1st grade, to be Deputy Conservator, 2nd grade, with effect from 8th August, 1889.

Mr. A. W. C. Stanbrough, Deputy Conservator, 4th grade, to be Deputy Conservator, 3rd grade, with effect from 8th August, 1889.

Mr. A. W. Lushington, Assistant Conservator, 1st grade, and Acting Deputy Conservator, 3rd grade, to be Deputy Conservator, 4th grade, with effect from 8th August, 1889.

Mr. F. A. Lodge, Acting Assistant Conservator, 1st grade, to be Assistant Conservator, 1st grade, with effect from 8th August, 1889.

T. Mahomed Ali Khan Saib, Acting Assistant Conservator, 3rd grade, to be Assistant Conservator, 3rd grade, with effect from 8th August, 1889.

No. 352.—*Mr. W. Carroll*, Acting District Forest Officer, Bellary, to act as District Forest Officer, North Arcot, *vice Mr. T. Sheffield*, on other duty, or until further orders.

No. 353.—*Mr. P. M. Lushington*, District Forest Officer, Anantapur, and Acting District Forest Officer, Kurnool, to act as District Forest Officer, Bellary, until further orders.

No. 354.—*The 3rd December, 1889.—Mr. W. C. Hayne*, Deputy Conservator of Forests, 3rd grade, to be District Forest Officer, Trichinopoly.

No. 355.—*Mr. C. Eber Hardie*, Sub-Assistant Conservator of Forests, 1st grade, to be District Forest Officer, North Malabar.

No. 356.—*Mr. R. W. Morgan*, Deputy Conservator of Forests, 3rd grade, to be District Forest Officer, Coimbatore, North.

3.—BOMBAY GAZETTE—

No. 7452.—*The 3rd October, 1889.*—His Excellency the Governor in Council is pleased—

to appoint *Mr. S. Hornidge*, on return from the Central Provinces, to duty as Divisional Forest Officer, Sholapur;

to place the services of *Mr. A. Stewart*, Deputy Conservator of Forests, on return from leave, at the disposal of the Government of India for employment in the Central Provinces; and

to direct that *Mr. F. Gleadow*, Deputy Conservator of Forests, on return from furlough, should be attached to the Conservator of Forests, Northern Circle.

The 8th October, 1889.—Messrs. F. R Desai and *R. S. F. Fagan*, Deputy Conservators of Forests, respectively delivered over and received charge of the Divisional Forest Office, West Khandesh on the 25th September, 1889, before office hours.

No. 7540.—*Mr. C. Greatheed*, Deputy Conservator of Forests, 3rd grade, is allowed an extension for fifteen days of the privilege leave of absence for one month granted to him by the Conservator of Forests, N. C. (*vide* the Notification, dated 5th September, 1889, by the Conservator, published at page 794 of the *Bombay Government Gazette* of the 12th idem, Part I).

The 10th October, 1889.—Mr. A. Stewart, Deputy Conservator of Forests, returned to duty on the 7th instant, before office hours, from the two months and twenty-nine days' privilege leave granted to him under Government Resolution No. 5682, dated 6th August, 1889.

No. 7850.—*The 17th October, 1889.—Mr. W. M. Fletcher*, Superintendent, Deccan Revenue Survey, is allowed furlough on medical certificate for one year under Article 340 of the Civil Service Regulations.

No. 7866.—*The 18th October, 1889.*—*Mr. H. Mainwaring*, Deputy Conservator of Forests, 3rd grade, is allowed furlough for one year.

No. 7919.—*The 19th October, 1889.*—His Excellency the Governor in Council is pleased—

to transfer *Mr. A. D. Wilkins*, Deputy Consverator of Forests, on public grounds, from North Thána to Ahmednagar, in place of *Mr. H. Mainwaring* proceeding on leave; and,

in supersession of previous orders, to appoint *Mr. F. Gleadow* to do duty as Divisional Forest Officer, North Thána, *vice Mr. Wilkins*, transferred.

The 31st October, 1889.—*Mr. N. D. Sataravala*, Sub-Assistant Conservator of Forests, delivered over charge of the Divisional Forest Office, Working Plans Branch, No. 1 Party, Kánara, to *Mr. T. R. Bell*, Assistant Conservator of Forests, on the 21st instant, after noon.

Messrs. J. H. Clabby, Sub-Assistant Conservator of Forests, and *R. H. Madan*, L.C.E., Acting Assistant Conservator of Forests, respectively delivered over and received charge of the North Sub-Division Forest Office, South Thána, on the 28th instant before office hours.

Messrs. R. H. Madan, L.C.E., Acting Assistant Conservator of Forests, and *C. Greatheed*, Deputy Conservator of Forests, respectively delivered over and received charge of the Sátára Divisional Forest Office on the afternoon of the 26th October, 1889.

The 1st November, 1889.—*Messrs. J. Baptista*, L.C.E., Acting Sub-Assistant Conservator of Forests, and *F. Gleadow*, Deputy Conservator of Forests, respectively delivered over and received charge of the North Sub-Division Forest Office, North Thána, on the 28th October, 1889, after office hours.

The 4th November, 1889.—*Messrs. A. D. Wilkins* and *F. Gleadow*, Deputy Conservators of Forests, respectively delivered over and received charge of the North Thána Divisional Forest Office, on the 31st October, 1889, after office hours.

The 7th November, 1889.—*Messrs. H. Mainwaring* and *A. D. Wilkins*, Deputy Conservators of Forests, respectively delivered over and received charge of the Divisional Forest Office, Ahmednagar, on the afternoon of the 1st instant.

The 23rd November, 1889.—*Mr. Sheshu Manju*, Sub-Assistant Conservator of Forests, who was granted three months' privilege leave of absence in Government Resolution No. 7012, dated 18th September, 1889, delivered over charge of the office of the Sub-Assistant Conservator of Forests, Southern Division, Kánara, to the Divisional Forest Officer, Southern Division, Kánara, on the 11th instant, after noon.

No. 8911.—*The 25th November, 1889.*—His Excellency the Governor in Council is pleased—

to place the services of *Mr. A. C. Robinson*, L.C.E., Acting Sub-Assistant Conservator of Forests, S. C., at the disposal of the Conservator of Forests, N. C., for employment in North Thána; and

to appoint *Mr. Dattátraya M. Bijur* to act as Sub-Assistant Conservator of Forests, S. C., during the remainder of the absence of *Mr. Sheshu Manju* on privilege leave.

The 29th November, 1889.—Mr. Dattátraya Manjunath Bijur, who has been appointed to act as Sub-Assistant Conservator in Government Resolution No. 8911, dated 25th November, 1889, reported himself for duty on the 28th instant before noon.

The 2nd December, 1889.—*Messrs. F. Gleadow*, Deputy Conservator of Forests, and *J. Baptista*, L.C.E., Acting Sub-Assistant Conservator, respectively delivered over and received charge of the North Sub-Division Forest Office on the 18th November, 1889, after office hours.

No. 9186.—*The 4th December, 1889.—Mr. T. R. D. Bell*, Assistant Conservator of Forests, 1st grade, has been allowed an extension for one day of the privilege leave of absence for one month and fifteen days granted to him under Government Notification No. 6302, dated 27th August, 1889.

The 19th December, 1889.—Mr. A. Stewart, Deputy Conservator of Forests, who was attached to the Poona Forest Division, proceeded from Poona to take up his appointment under the Government of India at Nagpur, in accordance with the orders contained in Government Resolution No. 7452, dated 3rd October last, Revenue Department, on the 8th October, 1889, after office hours.

The 26th December, 1889.—Mr. A. C. Robinson, Acting Sub-Assistant Conservator of Forests, whose services were placed at the disposal of the Conservator of Forests, Northern Circle, by Government Resolution, Revenue Department, No. 8911 of 25th ultimo, was relieved of his duties on the 7th instant, after office hours.

4.—CALCUTTA GAZETTE—

1.—*The 24th December, 1889.—Mr. H. D. D. French*, Assistant Conservator of Forests, has passed in Land Revenue and in Hindustani by the Lower and the Higher Standards.

2. *Mr. H. H. Haines*, Assistant Conservator of Forests, has passed in Land Revenue *with credit*, in Forest Law and in Hindustani by the Lower Standard.

3. *Mr. E. E. Slane*, Assistant Conservator of Forests, has passed in Forest Law.

4. *Mr. R. Quinnell*, Assistant Conservator of Forests, has passed in Forest Law.

The 31st December, 1889.—Mr. A. L. Home, Conservator of Forests, Bengal, is allowed leave for three months, under Article 291 of the Civil Service Regulations, with effect from the 30th instant.

5.—ASSAM GAZETTE—

No. 348.—*The 23rd October, 1889.—Mr. D. P. Copeland*, Officiating Deputy Conservator of Forests, received charge of the Kámrúp Forests from *Mr. C. P. Fisher*, Assistant Conservator of Forests, on the forenoon of the 14th October, 1889.

No. 570.—*The 7th November, 1889.—Mr. A. G. Mein*, Deputy Conservator of Forests, received charge of the Goálpára Forest Divi-

sion from *Mr. T. J. Campbell*, Assistant Conservator, on the forenoon of the 14th instant.

No. 71.—*Babu Tara Kisor Gupta*, Sub-Assistant Conservator of Forests, received charge of the Cachar Forest Division, in addition to his own duties, from *Mr. H. G. Young*, Assistant Conservator of Forests, deputed on special duty on the afternoon of the 19th October, 1889.

No. 379.—*The 8th November, 1889.*—*Mr. F. S. Barker*, Assistant Conservator of Forests, 1st grade, and Officiating Deputy Conservator, 4th grade, Assam, is confirmed in the latter grade, with effect from the 11th August, 1889, consequent on the retirement of *Mr. A. R. Grant*, Deputy Conservator.

No 409.—*The 17th December, 1889.*—Under Article 98 (*a*) of the Civil Service Regulations, *Mr. H. G. Young*, Assistant Conservator of Forests, was deputed on special duty in North Cachar, with effect from the afternoon of the 19th October, 1889.

No. 410.—*Mr. Young* returned from special duty and took over charge of the Cachar Forest Division from *Babu Tara Kisor Gupta*, Sub-Assistant Conservator of Forests, on the forenoon of the 25th November, 1889.

6.—North-Western Provinces and Oudh Gazette—

No. $\frac{4272}{\text{II-86A-10-1}}$.—*The 17th October, 1889.*—With effect from the 12th June, 1889, the date on which *Mr. E. McA. Moir*, Officiating Deputy Conservator of Forests, 2nd grade, was appointed to officiate as Conservator of Forests, 3rd grade, *vice Lieutenant-Colonel F. Bailey*, on privilege leave—

Mr. A. Smythies, Officiating Deputy Conservator of Forests, 3rd grade, to officiate as Deputy Conservator of Forests, 2nd grade;

Mr. F. B. Bryant, Officiating Deputy Conservator of Forests, 4th grade, to officiate as Deputy Conservator of Forests, 3rd grade;

Mr. J. E. Barrett, Officiating Assistant Conservator of Forests, 1st grade, to officiate as Deputy Conservator of Forests, 4th grade.

No. $\frac{4273}{\text{II-86A-10-2}}$.—With effect from the 15th July, 1889, the date on which *Mr. W. G. Allan*, Deputy Conservator of Forests, 2nd grade, was appointed to officiate as Deputy Conservator of Forests, 1st grade—

Mr. S. Eardley-Wilmot, Officiating Deputy Conservator of Forests, 3rd grade, to officiate as Deputy Conservator of Forests, 2nd grade;

Mr. A. G. Hobart-Hampden, Officiating Deputy Conservator of Forests, 4th grade, to officiate as Deputy Conservator of Forests, 3rd grade.

No. $\frac{4274}{\text{II-86A-10-3}}$.—With effect from the 10th August, 1889, the date on which *Mr. E. P. Dansey*, Officiating Conservator of Forests, 3rd grade, Berar, reverted to his substantive appointment of De-

puty Conservator of Forests, 3rd grade, North-Western Provinces—

Mr. E. P. Dansey, Deputy Conservator of Forests, 3rd grade, to officiate as Deputy Conservator of Forests, 2nd grade;

Mr. S. Eardley-Wilmot, Officiating Deputy Conservator of Forests, 2nd grade, to officiate as Deputy Conservator of Forests, 3rd grade;

Mr. A. G. Hobart-Hampden, Officiating Deputy Conservator of Forests, 3rd grade, to officiate as Deputy Conservator of Forests, 4th grade.

No. $\frac{4275}{\text{II-86A-10-4}}$.—With effect from the 13th August, 1889, the date on which *Mr. E. P. Dansey*, Officiating Deputy Conservator of Forests, 2nd grade, was re-appointed to officiate as Conservator of Forests, 3rd grade, Berar—

Mr. S. Eardley-Wilmot, Officiating Deputy Conservator of Forests, 3rd grade, to officiate as Deputy Conservator of Forests, 2nd grade;

Mr. A. G. Hobart-Hampden, Officiating Deputy Conservator of Forests, 4th grade, to officiate as Deputy Conservator of Forests, 3rd grade.

No. $\frac{4276}{\text{II-86A-10-5}}$.—With effect from the 23rd August, 1889, the date on which *Lieutenant-Colonel F. Bailey*, Conservator of Forests, returned from privilege leave and took charge of the School Circle from *Mr. E. McA. Moir*—

Mr. E. McA. Moir, Officiating Conservator of Forests, 3rd grade, to officiate as Deputy Conservator of Forests, 2nd grade;

Mr. S. Eardley-Wilmot, Officiating Deputy Conservator of Forests, 2nd grade, to officiate as Deputy Conservator of Forests, 3rd grade;

Mr. A. G. Hobart-Hampden, Officiating Deputy Conservator of Forests, 3rd grade, to officiate as Deputy Conservator of Forests, 4th grade.

No. $\frac{4277}{\text{II-86A-10-6}}$.—With effect from the 5th September, 1889, the date on which *Mr. W. G. Allan*, Officiating Deputy Conservator of Forests, 1st grade, reverted to his substantive appointment of Deputy Conservator of Forests, 2nd grade—

Mr. A. Smythies, Officiating Deputy Conservator of Forests, 2nd grade, to officiate as Deputy Conservator of Forests, 3rd grade;

Mr. F. B. Bryant, Officiating Deputy Conservator of Forests, 3rd grade, to officiate as Deputy Conservator of Forests, 4th grade;

Mr. J. E. Barrett, Officiating Deputy Conservator of Forests, 4th grade, to officiate as Assistant Conservator of Forests, 1st grade.

No. $\frac{5083}{\text{II-982A-2}}$.—*The 10th December, 1889.—Babu Karuna Nidhan Mukerji*, Sub-Assistant Conservator of Forests, from 2nd to 1st grade, with effect from 1st November, 1889, *vice Babu Kanhaiya Lall*, retired from the service.

7.—PUNJAB GAZETTE—

No. 339.—*The 2nd October, 1889.*—With reference to Government of India Notification No. 623F., dated the 21st of June, 1889, *Mr. J. E. Barrett*, Assistant Conservator of Forests, reported his arrival at Jhelum on the forenoon of the 6th of September, 1889, and assumed charge of the Jhelum Forest Division on the afternoon of the 7th September, 1889, relieving *Mr. C. Rossiter.*

No. 355.—*The 16th October, 1889.*—Consequent on the transfer of *Bábu Hira Singh*, Sub-Assistant Conservator, from the Punjab to Ajmere, as notified in Government of India Notification No. 1023F., dated 27th September, 1889, the Hon'ble the Lieutenant-Governor is pleased to direct that the following promotions be made with effect from the 13th of August, 1889 :—

Babu Jawala Parshad, Officiating Sub-Assistant Conservator of Forests, to be confirmed in his appointment;

Forest Ranger *Fazl Din* (II) to officiate as Sub-Assistant Conservator of Forests.

No. 364.—*The 18th October, 1889.*—*Bábu Hira Singh*, Sub-Assistant Conservator of Forests, and Forest Ranger *Fazl-ud-din* respectively made over and assumed charge of the Montgomery Forest Division on the afternoon of the 12th August, 1889.

No. 374.—*Mr. E. R. Murray*, Assistant Conservator of Forests, has obtained privilege leave of absence for one month and fifteen days, under Section 283 of the Civil Service Regulations, with effect from the 15th September, 1889, or such subsequent date as he may have availed himself of it.

No. 378.—*The 23rd October, 1889.*—The following rules regarding the Examination in Punjabi of Forest Officers in the Punjab, which have received the approval of the Government of India, are published for general information. Officers who pass this examination will be held to have passed in an "optional" language within the meaning of Section 55 of the Forest Code, and under Section 56 of the Code will be entitled to a reward of Rs. 500.

A Committee for Examination in the Punjabi language will assemble half-yearly at Meean-Meer on 10th January and 10th July. Applications to be permitted to join the examination must be forwarded to the Brigade-Major, Meen-Meer, fifteen days prior to these dates.

The text books to be read for the examination are the Sikhán-de-ráj-dí-Vikhyan, with selections from the Janam Sákhí. The character to be employed in the examination is Gurmukhí.

The tests by which candidates are required to qualify are as follows:—

(*a*). Construing with readiness and accuracy from the prescribed text books.

(*b*). Translating accurately and with correctness of idiom and grammar not less than half an ordinary octavo page of plain English into the language in which the examination is held.

(*c*). Reading fairly and translating readily and correctly manuscripts in the above languages. These manuscripts may

be selected from the proceedings of a case in court, from reports or petitions addressed to Civil and Military authorities, from letters passing between natives of India in the ordinary course of business, or from private correspondence. They should not be written with the clearness of a printed book, nor yet in a very cramped or crabbed hand, but in such a manner as fairly and honestly to represent the written characters generally employed.

(*d*). Conversing with the examiners or with natives of India with fluency and with such correctness of pronunciation, grammar and idiom as to be at once intelligible.

No. 398.—*The 7th November, 1889.*—*Mr. E. R. Murray*, Assistant Conservator of Forests, and *Mr. C. F. Rossiter*, Officiating Assistant Conservator of Forests, respectively made over and assumed charge of the Chenab Forest Division on the afternoon of the 17th September, 1889, on the departure of the former on 1 month and 15 days' privilege leave, granted to him by *Punjab Government Gazette* Notification No. 374, dated 23rd October, 1889.

No. 422.—*The 19th November, 1889.*—With reference to Punjab Government Notification No. 327, dated 23rd September, 1889, granting three months' Examination leave to *Mr. A. V. Monro*, Assistant Conservator of Forests, it is hereby notified that *Mr. Monro* reported his return to duty at Lahore on the forenoon of the 25th October, 1889, and was attached from that date to the Direction Division.

No. 426.—*The 20th November, 1889.*—With reference to Notification No. 398, dated 7th November, 1889, it is hereby notified that *Mr. E. R. Murray*, Assistant Conservator of Forests, reported his return to duty from the privilege leave granted to him in Notification No. 374, dated 23rd October, 1889, on the afternoon of 1st November, 1889, and resumed charge of the Chenab Forest Division on the afternoon of the 4th idem, relieving *Mr. C. F. Rossiter.*

No. 429.—*Mr. J. C. McDonell*, Deputy Conservator of Forests, on return from the furlough granted in Punjab Government Notification No. 82, dated 17th February, 1888, reported his arrival at Karachi on the afternoon of the 7th of November, 1889.

No. 434.—*The 29th November 1889.*—*Mr. A. E. Wild*, Deputy Conservator of Forests, Hazara, is granted privilege leave of absence for three months, under Article 283 of the Civil Service Regulations, with effect from the forenoon of the 11th November, 1889.

Mr. A. V. Monro, Assistant Conservator of Forests, Direction Division, is appointed to hold charge of the Hazara Division with effect from the forenoon of the 11th November, 1889, *vice Mr. A. E. Wild.*

No. 437.—*Mr. J. C. McDonell*, Deputy Conservator of Forests, is, on return from furlough, posted to Jhelum, and assumed charge of the Jhelum Forest Division on the forenoon of the 13th November, 1889, relieving *Mr. J. E. Barrett*, Assistant Conservator of Forests, transferred.

No. 441.—*The 2nd December, 1889.*—*Babu Fazl-ud-din*, Officiating Sub-Assistant Conservator of Forests, and *Mr. C. F. Rossiter*, Officiating Assistant Conservator of Forests, respectively made over and assumed charge of the Montgomery Forest Division on the afternoon of the 13th November, 1889.

No. 444.—In Notification No. 426, dated 20th November, 1889, notifying *Mr. E. R. Murray's* return to duty, *for* "afternoon of the 1st November," *read* "forenoon of the 1st November."

No. 451.—*The 10th December, 1889.*—*Mr J. C. Barrett*, Assistant Conservator of Forests, on relief by *Mr. J. C. McDonell*, Deputy Conservator of Forests, of the charge of the Jhelum Forest Division, is attached to the Mooltan Forest Division, with effect from the forenoon of the 22nd November, 1889.

No. 466.—*The 17th December, 1889.*—Consequent on the return from furlough of *Mr. J. C. McDonell*, Deputy Conservator of Forests, 1st grade, the following reversions shall have effect from the forenoon of the 13th November, 1889 :—

Mr. G. G. Minniken, to Deputy Conservator, 3rd grade;
Mr. W. E. D'Arcy to Deputy Conservator, 4th grade;
Mr. J. L. Pigot, to Assistant Conservator, 1st grade.

No. 468.—Consequent on the departure, on the 11th of November, 1889, of *Mr. A. E. Wild*, Deputy Conservator of Forests, 1st grade, on the privilege leave granted to him in Punjab Government letter No. 387, dated 2nd November, 1889, the following temporary promotions to take place with effect from the 11th December, 1889, and until further orders :—

Mr. G. G. Minniken, to act as Deputy Conservator, 2nd grade;
Mr. W. E. D'Arcy, to act as Deputy Conservator, 3rd grade;
Mr. J. L. Pigot, to act as Deputy Conservator, 4th grade.

8.—Central Provinces Gazette—

No. 5741.—*The 25th September, 1889.*—*Mr. Chander Kumar Chatterji*, Sub-Assistant Conservator of Forests, Damoh, availed himself, on the afternoon of the 2nd instant, of the six months' leave on medical certificate granted to him by Notification No. 5556, dated the 18th idem, making over charge of his duties to the Deputy Commissioner, Damoh.

No. 4991.—*The 7th October, 1889.*—*Mr. H. B. Anthony*, Officiating Deputy Conservator of Forests, is transferred from Bilaspur and is posted to the Raipur District.

Mr. Anthony will, until further orders, continue to hold charge of the current work in the Bilaspur District, in addition to his own duties in the Raipur District.

No. 6097.—*The 15th October, 1889.*—*Mr. M. Muttannah*, Officiating Assistant Conservator of Forests, Narsinghpur, availed himself, on the forenoon of the 9th ultimo, of the forty-five days' privilege leave granted him by Notification No. 5144 of the 26th August, 1889, making over charge of his duties to the Deputy Commissioner.

No. 6226.—*The 21st October, 1889.*—*Mr. A. Stewart*, Deputy Conservator of Forests, whose services have been placed by the Government of India at the disposal of the Chief Commissioner,

is appointed to the charge of the Nagpur-Wardha Forest Division.

Mr. Stewart assumed charge of the Nagpur-Wardha Division from *Mr. S. Hornidge*, Deputy Conservator of Forests, on the forenoon of the 11th instant.

No. 6259.—*The 24th October, 1889.*—*Mr. J. McKee*, Deputy Conservator of Forests, Mandla, under orders for Coorg, made over charge of his duties to *Mr. F. C. Hicks*, Assistant Conservator of Forests, on the afternoon of the 27th ultimo.

No. 6354.—*The 29th October, 1889.*—Privilege leave for fifteen days, under Article 291 of the Civil Service Regulations, is granted to *Mr. J. C. Mendes*, Sub-Assistant Conservator of Forests, Jubbulpore, with effect from the date on which he may be permitted to avail himself of it.

No. 6506.—*The 6th November, 1889.*—Under the orders of the Government of India, in the Revenue and Agricultural Department, *Mr. J. McKee*, Officiating Deputy Conservator of Forests, 2nd grade, in the Central Provinces, is transferred to Coorg.

Mr. F. C. Hicks, Assistant Conservator of Forests, at present attached to the Mandla District, is temporarily appointed to the charge of the forests of the Mandla District.

Mr. McKee made over cnarge of his duties of District Forest Officer, Mandla, to *Mr. Hicks*, on the afternoon on the 27th September, 1889.

No. 6585.—*The 7th November, 1889.*—*Mr. A. Stewart*, Deputy Conservator of Forests, is transferred from the charge of the Nagpur-Wardha Division to the charge of the Jubbulpore Division.

Mr. A. Watson, Assistant Conservator of Forests, attached to the Direction Division, is transferred to the charge of the Nagpur-Wardha Division.

On being relieved by *Mr. Stewart*, *Mr. J. C. Mendes*, Sub-Assistant Conservator of Forests, Jubbulpore, is posted to the Chanda District, for employment on the demarcation of Forest boundaries in the Sironcha Tahsil of that District.

No. 6622.—*The 11th November, 1889.*—*Mr. A. F. Gradon*, Assistant Conservator of Forests, returned from the three months' privilege leave granted him by Notification No. 4119, dated the 8th July 1889, and reported his arrival at Nagpur on the forenoon of the 4th instant.

Mr. Gradon is appointed, temporarily, to the charge of the Working Plans Division.

No. 6706.—*The 15th November, 1889.*—*Mr. F. S. Barker*, Officiating Deputy Conservator of Forests, Sambalpur, on return from the three months' privilege leave granted him by Notification No. 4346, dated the 18th July, 1889, is posted to the Mandla District.

Mr. Barker returned from privilege leave and reported his arrival at Mandla on the forenoon of the 28th ultimo. He assumed charge of the forests of the Mandla District on the afternoon of the 1st instant from *Mr. F. C. Hicks*, Assistant Conservator of Forests.

No. 6799.—*The 19th November, 1889.*—Privilege leave for one week, under Article 291 of the Civil Service Regulations, is granted to *Mr. M. Muttanah*, Officiating Assistant Conservator of

Forests, Narsinghpur, in extension of the forty-five days' privilege leave granted him by Notification No. 5144, dated the 26th August, 1889.

No. 6825.—*The 20th November, 1889.*—*Mr. F. Gradon*, Assistant Conservator of Forests, at present temporarily attached to the Working Plans Division, is transferred to the charge of the forests of the Bhandara District.

On being relieved by *Mr. Gradon*, *Mr. A. W. Blunt*, Assistant Conservator of Forests, is transferred to the charge of the forests of the Bilaspur District.

No. 6831.—With reference to Notification No. 6585, dated the 7th instant, *Mr. A. Watson*, Assistant Conservator of Forests, received charge of the forests of the Nagpur-Wardha Division from *Mr. A. Stewart*, Deputy Conservator of Forests, on the afternoon of the 11th idem.

No. 7037.—*The 29th November, 1889.*—With reference to Notification No. 6825, dated the 20th November, 1889, *Mr, A. F. Gradon*, Assistant Conservator of Forests, received charge of the Forests of the Bhandara District from *Mr. A. W. Blunt*, Assistant Conservator of Forests on the afternoon of the 11th instant.

Mr. Blunt, Assistant Conservator of Forests, transferred to Bilaspur, received charge of the Forests of that District from *Mr. H. B. Anthony*, Officiating Deputy Conservator of Forests, on the forenoon of the 13th instant.

No 7152.—*The 5th December, 1889.*—*Mr. H. Moore*, Officiating Deputy Conservator of Forests, returned from the privilege leave granted him by Notification No. 4121, dated the 8th July, 1889, and received charge of the Forests of the Chhindwara District from *Mr. E. Dobbs*, Deputy Conservator of Forests, on the forenoon of of the 12th ultimo.

No. 7261.—*The 10th December, 1889.*—With reference to Notification No. 6535, dated the 7th November, 1889, *Mr. A. Stewart*, Deputy Conservator of Forests, received charge of the Forests of the Jubbulpore Division from the Deputy Commissioner of that district on the forenoon of the 13th idem.

No. 7264.—*Mr. F. B. Dickenson*, Deputy Conservator of Forests, 3rd (officiating 2nd) grade, in Coorg, who was appointed by the Government of India, Revenue and Agricultural Department Notification No. 11 F. C., dated the 29th November, 1889, to officiate in the 3rd grade of Conservators and to hold charge of the Northern Forest Circle in the Central Provinces, assumed charge of his duties on the forenoon of the 28th October last.

No. 7278.—Consequent on the departure on three months' privilege leave of *Mr. F. B. Dickenson*, Officiating Deputy Conservator, 2nd grade, in Coorg, the following temporary promotions are ordered, with effect from the 8th July, 1889 :—

Mr. W. F. Thomas, Deputy Conservator, 3rd grade, to officiate as Deputy Conservator, 2nd grade.

Mr. W. King, Deputy Conservator, 4th grade, sub. *pro tem.*, to officiate as Deputy Conservator, 3rd grade.

Mr. H. Moore, Officiating Deputy Conservator, 4th grade, to be Deputy Conservator, 4th grade, sub. *pro tem.*

Mr. H. B. Anthony, Assistant Conservator, 1st grade, sub. *pro tem.*, to officiate as Deputy Conservator, 4th grade.

Mr. A. E. Lowrie, Officiating Assistant Conservator, 1st grade, to be Assistant Conservator, 1st grade, sub. *pro tem.*

Mr. A. Watson, Assistant Conservator, 2nd grade, to officiate as Assistant Conservator, 1st grade.

No. 7279.—In supersession of Notification No. 5539, dated the 17th September last, the following temporary promotions are ordered, with effect from the 12th August, 1889, consequent on the departure on the three months' privilege leave of *Mr. Moore*, Deputy Conservator, 4th grade, sub. *pro tem.*

Mr. A. E. Lowrie, Assistant Conservator, 1st grade, sub. *pro tem.*, to officiate as Deputy Conservator, 4th grade.

Mr. A. Watson, Officiating Assistant Conservator, 1st grade, to be Assistant Conservator, 1st grade, sub. *pro tem.*

Mr. A. F. Gradon, Assistant Conservator, 2nd grade, to officiate as Assistant Conservator, 1st grade.

No. 7280.—Consequent on the creation of an additional post of Deputy Conservator, 3rd grade, in the Central Provinces-Coorg-Berar list, the following temporary promotions are ordered, with effect from the 28th August, 1889, and until further orders :—

Mr. H. Moore, Deputy Conservator, 4th grade, sub. *pro tem.*, to officiate as Deputy Conservator, 3rd grade.

Mr. G. F. Taylor, Officiating Deputy Conservator, 4th grade, in Berar, to officiate as Deputy Conservator, 3rd grade.

Mr. A. Watson, Assistant Conservator, 1st grade sub. *pro. tem.*, to officiate as Deputy Conservator, 4th grade.

Mr. A. F. Gradon, Officiating Assistant Conservator, 1st grade, to be Assistant Conservator, 1st grade, sub. *pro tem.*

No. 7281.—Consequent on the appointment of *Mr. R. H. E. Thompson*, as Officiating Conservator of Forests, the following temporary promotions are made, with effect from the 2nd September, 1889 :—

Mr. G. H. Foster, Deputy Conservator, 3rd grade, to officiate as Deputy Conservator, 2nd grade.

Mr. H. B. Anthony, Officiating Deputy Conservator, 4th grade, to officiate as Deputy Conservator, 3rd grade.

Mr. A. F. Gradon, Assistant Conservator, 1st grade, sub. *pro tem.*, to officiate as Deputy Conservator, 4th grade.

No. 7282.—Consequent on the return from privilege leave of *Mr. F. B. Dickenson*, Officiating Deputy Conservator, 2nd grade, the following reversions are ordered, with effect from the 8th October, 1889 :—

Mr. G. H. Foster, Officiating Deputy Conservator, 2nd grade, to revert to Deputy Conservator, 3rd grade.

Mr. H. B. Anthony, Officiating Deputy Conservator, 3rd grade, to revert to Officiating Deputy Conservator, 4th grade.

Mr. A. F. Gradon, Officiating Deputy Conservator, 4th grade, to revert to Assistant Conservator, 1st grade, sub. *pro tem.*

No. 7283.—Consequent on the appointment of *Mr. F. B. Dickenson* as Officiating Conservator of Forests, the following temporary promotions are made, with effect from the 28th October, 1889 :—

Mr. G. H. Foster, Deputy Conservator, 3rd grade, to officiate as Deputy Conservator, 2nd grade.

Mr. H. B. Anthony, Officiating Deputy Conservator, 4th grade, to officiate as Deputy Conservator, 3rd grade.

Mr. A. F. Gradon, Assistant Conservator, 1st grade, sub. *pro tem.*, to officiate as Deputy Conservator, 4th grade.

No. 7284.—Consequent on the return from privilege leave of *Mr. H. Moore*, Officiating Deputy Conservator, 3rd grade, the following reversions are ordered, with effect from the 12th November, 1889:—

Mr. H. B. Anthony, Officiating Deputy Conservator, 3rd grade, to revert to Officiating Deputy Conservator, 4th grade.

Mr. A. F. Gradon, Officiating Deputy Conservator, 4th grade, to revert to Assistant Conservator, 1st grade, sub. *pro tem.*

No. 7313.—The Chief Commissioner is pleased to add the following Rules to those framed under Section 25 (i) of Act VII. of 1878 (the Indian Forest Act) and published in Notification No. 6925, dated the 29th November, 1888, and No. 1505, dated the 8th March, 1889:—

IX. A permit is not transferable; and is valid only for the district or districts for which it is issued.

X. Permits to shoot in the forest of the district in which they are stationed may be issued *free of charge* to Military officers below the rank of Field Officer, and at *half rates* to other Military officers. Such a permit is subject to all the conditions contained in the preceding Rules, and does not cover charges other than the fee which is ordinarily payable for a sportsman's license under Rule V (1) or Rule VI.

No. 7480.—*The 18th December, 1889.*—The Forest Divisions of the Central Provinces having, with sanction of the Government of India, been grouped into two circles, called respectively, the Northern and Southern Circle, each under a Conservator, the following Schedule of the Divisions included in each circle is published for general information:—

Northern Circle.	*Southern Circle.*
Head-quarters, Jubbulpore.	Head-quarters, Nagpur.
Jubbulpore.	Chhindwara.
Mandla.	Seonee.
Saugor.	Balaghat.
Damoh.	Wardha.
Narsinghpur.	Bhandara.
Betul.	Chanda.
Hoshangabad.	Raipur.
Nimar.	Bilaspur.
Nagpur.	Sambalpur.

No. 7493.—The Chief Commissioner is pleased to make the following Rules, under Section 25 (i) of Act VII. of 1878 (the Indian Forests Act), in continuation of those published in *Central Provinces Gazette* Notifications No. 6925, dated the 29th November,

1888, No. 1505, dated the 8th March, 1889, and No. 7313, dated the 11th December, 1889 :—

XI. Independently of any restrictions made under Rule II., clause (2), a permit issued under these Rules does not authorise the destruction of any kind of *Bird*, other than the game and edible birds included in the following list :—

SYSTEMATIC NAME.	VERNACULAR NAME.
1. *Sand Grouse.*	
Pterocles fasciatus, ...	Bhut-titur. Dongur-kouri.
„ exustus, ...	Bhut-titur.
2. *Pea-fowl.*	
Pavo cristatus, ...	Mor Munjur.
3. *Jungle-fowl.*	
Gallus ferrugineus, ...	Jungly Murghi.
„ Sonneratii, ...	Do.
4. *Spur-fowl.*	
Galloperdrix spadiceus, ...	Choti Jungly Murghi.
„ lunulatus, ...	Do. do.
5. *Partridge.*	
Francolinus vulgaris, ...	Kala titur.
„ pictus, ...	Do.
Ortygornis pondiceriana, ...	Gora titur.
6. *Quail,*	
Coturnix coromandelica, ...	Chinuk.
7. *Bush-Quail.*	
Perdicula Argoonda, ...	Lawa.
„ asiatica.	Do.
Microperdix Blewitti, ...	Sirsi-Lawa.
8. *Bustard-Quail.*	
Turnix pugnax, ...	Gundru.
„ Jondera, ...	Do.
„ Dussumieri, ...	Turn-Dubki.
9. *Bustard.*	
Eupoditis Edwardsii, ...	Hoom-Tokdur.
10. *Lik-Florikan.*	
Sypheotides aurita, ...	Tun-Mor.
11. *Spurred-Goose.*	
Sarkidiornis melanoleucus, ...	Nukta.
12. *Goose-Teal.*	
Nettapus coromandelicus, ...	Girja.
13. *Whistling Teal.*	
Dendrocygna arcuata, ...	Silli.
14. *Grey Duck.*	
Anas Pœkilorhynca, ...	Garmpai.
15. *Green Pigeon.*	
Crocopus phœnicopterus, ...	Harrial.
„ chlorigastra, ...	Do.
16. *Blue Rock Pigeon.*	
Columba intermedia, ...	Kabutur.
17. *Doves.*	
Turtur Meena, ...	Kula fachta.
„ Cambayensis, ...	Tortru fachta.
„ suratensis, ...	Chitroka fachta.
„ risorius, ...	Dhor fachta.
„ senegalensis, ...	Seroti fachta.

XII.—With reference to clause (3) of Rule II., the destruction of birds of the species named in Rule XI. and of the does and hinds

of deer and antelope is prohibited *during the close season*, the term of which is fixed as follows :—

For		*Close season.*
1.	Sand-grouse,...	1st October to 31st May.
2.	Pea-fowl, ...	1st March to 30th November.
3.	Jungle-fowl, ...	Do. do.
4.	Spur-fowl, ...	Do. do.
5.	Partridge—	
	Francolinus vulgaris, ...	1st June to 30th November.
	„ pictus, ...	
	Ortygornis pondiceriana, ...	1st January to 30th June.

No. 7491.—By virtue of the authority given by No. 20 of the Rules framed by the Government of India under Section 17 of Act XI. of 1878 (the Indian Arms Act), the Chief Commissioner is pleased to direct that Licenses granted under Nos. 13 and 16 of those Rules (*i.e.*, Licenses in Forms VIII. and XI., to go armed for sport, &c., and to possess arms for the destruction of wild animals) shall be subject to the observance of a close season, the limits of which shall be as follow :—

	SPECIFICATION OF BIRDS OR ANIMALS.	*Close season.*
	Birds.	
1.	Sand-grouse, ...	1st October to 31st May.
2.	Pea-fowl, ...	1st March to 30th November.
3.	Jungle-fowl, ...	Do. do.
4.	Spur-fowl, ...	Do. do.
5.	Partridge—	
	Francolinus vulgaris, ...	1st June to 30th November.
	„ pictus, ...	
	Ortygornis pondiceriana, ...	1st January to 30th November.
6.	Quail, ...	1st May to 30th November.
7.	Bush-Quail, ...	Do. do.
8.	Bustard-Quail, ...	Do. do.
9.	Bustard, ...	Do. do
10.	Lik-Florikan, ...	Do. do.
11.	Spurred-Goose, ...	1st June to 30th November.
12.	Goose-Teal, ...	Do. do.
13.	Whistling Teal, ...	Do. do.
14.	Grey Duck, ...	Do. do.
15.	Green Pigeon, ...	1st February to 31st July.
16.	Blue Rock Pigeon, ...	1st November to 30th June.
17.	Dove—	
	Turtur Meena, ...	1st February to 31st July.
	„ Cambayensis, ...	1st November to 31st May.
	„ suratensis, ...	
	„ risorius, ...	
	„ senegalensis, ...	1st February to 31st July.
18.	Other Birds, ...	The whole year.
	Animals.	
19.	Does and Hinds of Deer and Antelope, ...	1st July to 1st March.

No. 7613.—*The 27th December, 1889.*—Furlough for three months, under Article 340 of the Civil Service Regulations, is granted to *Captain C. W. Losack*, Deputy Conservator of Forests, in extension of the nine months' furlough granted to him by Notification No. 483, dated the 24th January, 1889.

No. 8.—*2nd January, 1890.*—With reference to Government of India, Revenue and Agricultural Department, Notification No. 26 F. C., dated the 28th December, 1889, *Colonel G. J. van-Someren* assumed charge of the office of Conservator of Forests, Northern Circle, from *Mr. F. B. Dickenson* on the forenoon of the 7th idem.

9.—BURMA GAZETTE—

No. 153.—*The 21st October, 1889.*—*Mr. G. Q. Corbett*, Officiating Deputy Conservator of Forests, on being relieved by *Mr. C. H. Hobart-Hampden*, is transferred from Shwegyin to the Tharrawaddy Division of the Pegu Circle as a temporary measure.

No. 154.—Under the provisions of section 18 of the Burma Forest Act, 1881, the Forest situated inthe Zeyawadi township of the Toungoo District, Tenasserim Division, is declared to be reserved forest from the 1st December, 1889. The reserve will be known as the *Pynchoung Reserve.* Its approximate area is 93 square miles.

No. 9.—*The 15th November, 1889.*—In continuation of Notification No. 7, dated the 26th August, 1889, *Mr. J. Copeland*, Deputy Conservator of Forests, reported his departure on privilege leave at Calcutta on the afternoon of the 3rd August, and his return from privilege leave on the 4th November, forenoon. He resumed charge of the Pyinmana Division on the 13th November, relieving *Mr. C. L. Toussaint*, Assistant Conservator of Forests.

No. 10.—*The 16th November, 1889.*—With reference to this office Notification No. 8, dated the 13th September, 1889, *Mr. L. A. W. Rind*, Deputy Conservator of Forests, 1st grade, reported his return from privilege leave and assumed charge of the Yaw Forest Division from *Mr. G. F. R. Blackwell*, Assistant Conservator of Forests, 3rd grade, on the forenoon of the 7th November, 1889.

No. 177.—*Mr. E. A. O'Bryen*, Assistant Conservator of Forests, is transferred from Bhamo to the Mandalay Division as a temporary measure.

No. 11.—*The 9th December, 1889.*—With referrence to *Burma Gazette* Notification No. 166 (Forests), dated the 25th November, 1889, *Mr. T. H. Aplin*, Deputy Conservator of Forests, reported his arrival at Minbu and took over charge of the Minbu Division from *Mr. C. E. Muriel*, Deputy Conservator of Forests, on the 29th November, 1889, before noon.

No. 12.—*The 10th December, 1889.*—*Mr. H. A. Houghton*, Deputy Conservator of Forests, and *Mr. G. Q. Corbett*, Officiating Deputy Conservator of Forests, respectively made over and received charge of the Working Plans Division on the afternoon of the 30th November, 1889.

No. 13.—*Mr. H. Carter*, Assistant Conservator of Forests, joined the Working Plans Division on the forenoon of the 28th November, 1889.

No. 365.—*The 14th December, 1889.*—At a departmental examination held at Mandalay on the 3rd December, 1889, the following officers passed the examination in Burmese by the standard specified:—

Higher Standard.

Mr. H. Calthrop, Deputy Conservator of Forests.

Lower Standard.

Mr. W. J. Lane-Ryan, Probationer, Forest Department.

No. 180.—*The 17th December, 1889.*—Under the provisions of Article 291 of the Civil Service Regulations, privilege leave for three months, is granted to *Mr. C. W. Allan*, Sub-Assistant Conservator of Forests, with effect from the date on which he availed himself of it. This department Notification No. 156 (Forests), dated the 30th October, 1889, is cancelled.

10.—HYDERABAD GAZETTE—

No. 248.—*The 18th October, 1889.*—*Mr. Mansukh Rai*, Sub-Assistant Conservator of Forests and District Forest Officer of Wun, is granted 15 days' privilege leave with effect from the date on which he avails himself of it.